SIEMENS

Parameter documentation

For:

Customer:	VSZ
Name of project:	KOSICE
Operator:	LANG
Documentation structur:	STANDARD
Source file:	KO050722.ODA
Output date:	22.07.2005

SIEMENS AG

Copyright 2002. All rights reserved.

Documentation designation: A/ = /BA1

Code number of compiler: -S100

Proprietary data, company confidential. All rights reserved
Confia a tiro de secret d'entreprise. Tous droits reservs.
Comunicado como seglegido empresarial. Reservados todos os direitos.
Confiado como secreto industrial. Nos reservamos todos los derechos.
The reproduction, transmission or use of this document or its
is not permitted without expres written authority.
Offenders will be liable for damages. All rights, including rights
created by patent grant or registration of a utility model or design, are reserved

Page

A=/BALSATOOLS-project documentation STANDARD

Header 1

List of contents 2

T=/BCAbbreviation list

Abbreviation list 1

T=/BDInformation (sorted according to modules)

D01 EAG /AE01 -Analog input module:Analog values 1

D01 EAG /AE02 -Analog input module:Analog values 4

D01 EAG /BM01 -Command and signalling module:Input assignment 6

D01 EAG /BM01 -Command and signalling module:Commands 8

D01 EAG /BM02 -Command and signalling module:Input assignment 10

D01 EAG /BM02 -Command and signalling module:Commands 11

D01 EAG /DE01 -Digital input module:Input assignment 12

D01 EAG /DE02 -Digital input module:Input assignment 14

D01 EAG /DE02 -Digital input module:Additional information for tap positions 16

D01 EAG /DE03 -Digital input module:Input assignment 17

D01 EAG /DE04 -Digital input module:Input assignment 19

D01 EAG /DE04 -Digital input module:Additional information for tap positions 21

D01 EAG /LT -Processor module for control 22

D02 EAG /AE01 -Analog input module:Analog values 23

D02 EAG /AE02 -Analog input module:Analog values 26

D02 EAG /BM01 -Command and signalling module:Input assignment 28

D02 EAG /BM01 -Command and signalling module:Commands 30

D02 EAG /BM02 -Command and signalling module:Input assignment 32

D02 EAG /BM02 -Command and signalling module:Commands 33

The reproduction, transmission or use of this document or its is not permitted without expres written authority. Offenders will be liable for damages. All rights, including rights created by patent grant or registration of a utility model or design, are reserved
Proprietary data, company confidential. All rights reserved. Confie a titre de secret d'entreprise. Tous droits réservés. Comunicado como segredo empresarial. Reservados todos os direitos. Confiado como secreto industrial. Nos reservamos todos los derechos.

Documentation structur: Standard
Source file: KO050722.ODA

	Page
D02 EAG /DE01 -Digital input module:Input assignment	34
D02 EAG /DE02 -Digital input module:Input assignment	36
D02 EAG /DE02 -Digital input module:Additional information for tap positions	38
D02 EAG /DE03 -Digital input module:Input assignment	39
D02 EAG /DE04 -Digital input module:Input assignment	41
D02 EAG /DE04 -Digital input module:Additional information for tap positions	43
D02 EAG /LT -Processor module for control	44
EA01 EAG/3 /BM01 -Command and signalling module:Input assignment	45
EA01 EAG/3 /BM01 -Command and signalling module:Commands	46
EA01 EAG/3 /BM02 -Command and signalling module:Input assignment	47
EA01 EAG/3 /BM02 -Command and signalling module:Commands	49
EA01 EAG/3 /BM03 -Command and signalling module:Input assignment	51
EA01 EAG/3 /BM03 -Command and signalling module:Commands	53
EA01 EAG/3 /BM04 -Command and signalling module:Input assignment	54
EA01 EAG/3 /BM04 -Command and signalling module:Commands	55
EA01 EAG/3 /BM05 -Command and signalling module:Input assignment	56
EA01 EAG/3 /BM05 -Command and signalling module:Commands	57
EA01 EAG/3 /EA01 SY -Synchronization module:Indications	58
EA01 EAG/3 /EA01 SY -Synchronization module:Analog values	60
EA01 EAG/3 /LT -Processor module for control	61
LZG /AE01 -Electronic analog input module SINAUT LSA:Analog values	62
LZG /BF01 -Command enable module SINAUT LSA:Commands	63
LZG /BF01 -Command enable module SINAUT LSA:Indications	64
LZG /DE1 -Digital input module SINAUT LSA:Input assignment	65
LZG /DE2 -Digital input module SINAUT LSA:Input assignment	67

Page

LZG /DE3 -Digital input module SINAUT LSA:Input assignment 69

LZG /DE4 -Digital input module SINAUT LSA:Input assignment 71

LZG /FP -Telecontrol processor unit 73

T=/BEInformation protection device (sorted according to device)

D01 7UT513 -Numerical protection device:Indications 1

D02 7UT513 -Numerical protection device:Indications 5

DA01 7SA513 -Numerical protection device:Indications 9

DA01 7SJ512 -Numerical protection device:Indications 12

DA02 7SA513 -Numerical protection device:Indications 14

DA02 7SJ512 -Numerical protection device:Indications 17

EA02 7SD502 -Numerical protection device:Indications 19

EA02 7SJ512 -Numerical protection device:Indications 21

EA03 7SJ512 -Numerical protection device:Indications 25

EA04 7SD502 -Numerical protection device:Indications 29

EA04 7SJ512 -Numerical protection device:Indications 31

EA05 7SJ511 -Numerical protection device:Indications 35

EA06 7SJ512 -Numerical protection device:Indications 36

EA06 7UT512 -Numerical protection device:Indications 40

EA07 7SJ512 -Numerical protection device:Indications 42

EA08 7SJ512 -Numerical protection device:Indications 46

EA08 7UT512 -Numerical protection device:Indications 50

EA09 7SD502 -Numerical protection device:Indications 52

EA09 7SJ511 -Numerical protection device:Indications 54

EA10 7SJ512 -Numerical protection device:Indications 55

EA10 7UT512 -Numerical protection device:Indications 59

Proprietary data, company confidential. All rights reserved.
Confie a titre de secret d'entreprise. Tous droits r,serv,s.
Comunicado como segredo empresarial. Reservados todos os direitos.
Confiado como secreto industrial. Nos reservamos todos los derechos.

The reproduction, transmission or use of this document or its is not permitted without expres written authority. Offenders will be liable for damages. All rights, including rights created by patent grant or registration of a utility model or design, are reserved

Proprietary data, company confidential. All rights reserved.
Confia a tire de secret d'entreprise. Tous droits reservs.
Comunicado como segredo empresarial. Reservados todos os direitos.
Confiado como secreto industrial. Nos reservamos todos los derechos.
The reproduction, transmission or use of this document or its
is not permitted without express written authority.
Offenders will be liable for damages. All rights, including rights
created by patent grant or registration of a utility model or design, are reserved

Documentation structur: Standard
Source file: K0050722.ODA

	Page
EA11 7SD502 -Numerical protection device:Indications	61
EA11 7SJ511 -Numerical protection device:Indications	63
EA12 7SJ512 -Numerical protection device:Indications	64
EA12 7UT512 -Numerical protection device:Indications	68
EA13 7SA511 -Numerical protection device:Indications	70
EA13 7SJ511 -Numerical protection device:Indications	73
EA15 7SA511 -Numerical protection device:Indications	75
EA15 7SJ511 -Numerical protection device:Indications	78
EA17 7SD502 -Numerical protection device:Indications	80
EA17 7SJ512 -Numerical protection device:Indications	82
EA18 7SD502 -Numerical protection device:Indications	84
EA18 7SJ511 -Numerical protection device:Indications	86
EA19 7SD502 -Numerical protection device:Indications	88
EA19 7SJ511 -Numerical protection device:Indications	90
EA20 7SD502 -Numerical protection device:Indications	92
EA20 7SJ511 -Numerical protection device:Indications	94
EA21 7SD610 -Numerical protection device:Indications	96
EA21 7SJ612 -Numerical protection device:Indications	98
EA23 7SD502 -Numerical protection device:Indications	100
EA23 7SJ512 -Numerical protection device:Indications	102
K01 7SJ512 -Numerical protection device:Indications	104
K02 7SJ512 -Numerical protection device:Indications	106
K02 7UT513 -Numerical protection device:Indications	108

T=/BGInformation compact I/O-unit (sorted according to device)

EA01 EAG/1 -Compact I/O unit:Indications	1

	Page
EA01 EAG/1 -Compact I/O unit:Commands	3
EA01 EAG/1 -Compact I/O unit:Analog values	4
EA01 EAG/2 -Compact I/O unit:Indications	7
EA01 EAG/2 -Compact I/O unit:Commands	8
EA01 EAG/2 -Compact I/O unit:Analog values	9
EA02 EAG -Compact I/O unit:Indications	12
EA02 EAG -Compact I/O unit:Commands	14
EA02 EAG -Compact I/O unit:Analog values	15
EA03 EAG -Compact I/O unit:Indications	18
EA03 EAG -Compact I/O unit:Commands	20
EA03 EAG -Compact I/O unit:Analog values	21
EA04 EAG -Compact I/O unit:Indications	24
EA04 EAG -Compact I/O unit:Commands	26
EA04 EAG -Compact I/O unit:Analog values	27
EA05 EAG -Compact I/O unit:Indications	30
EA05 EAG -Compact I/O unit:Commands	32
EA05 EAG -Compact I/O unit:Analog values	33
EA06 EAG -Compact I/O unit:Indications	35
EA06 EAG -Compact I/O unit:Commands	37
EA06 EAG -Compact I/O unit:Analog values	38
EA07 EAG -Compact I/O unit:Indications	40
EA07 EAG -Compact I/O unit:Commands	42
EA07 EAG -Compact I/O unit:Analog values	43
EA08 EAG -Compact I/O unit:Indications	46
EA08 EAG -Compact I/O unit:Commands	48

Proprietary data, company confidential. All rights reserved.
Confie a titre de secret d'entreprise. Tous droits r,serv,s.
Comunicado como segredo empresarial. Reservados todos os direitos.
Confiado como secreto industrial. Nos reservamos todos los derechos.

The reproduction, transmission or use of this document or its is not permitted without expres written authority.
Offenders will be liable for damages. All rights, including rights created by patent grant or registration of a utility model or design, are reserved.

Documentation structur: Standard
Source file: KO050722.ODA

			Date	22.07.2005	VSZ KOSICE	SIEMENS AG ISA TOOLS	Substation control system 6MB List of contents	A = /BA 6 +
			Drawn	LANG				
			Appr.				Document identification	-S100 Page
F	Remarks	Date	Name Norm		Orig./Repl. 1/Repl. by			

Proprietary data, company confidential. All rights reserved
Confia a tire da secret d'entreprise. Tous droits reservs.
Comunicado como segredo empressarial. Reservados todos os direitos
Confiado como secreto industrial. Nos reservamos todos los derechos

The reproduction, transmission or use of this document or its
is not permitted without expres written authority.
Offenders will be liable for damages. All rights, including rights
created by patent grant or registration of a utility model or design, are reserved

Documentation structur: Standard
Source file: K0050722.ODA

Page

EA08 EAG -Compact I/O unit:Analog values 49
EA09 EAG -Compact I/O unit:Indications 51
EA09 EAG -Compact I/O unit:Commands 53
EA09 EAG -Compact I/O unit:Analog values 55
EA10 EAG -Compact I/O unit:Indications 58
EA10 EAG -Compact I/O unit:Commands 60
EA10 EAG -Compact I/O unit:Analog values 61
EA11 EAG -Compact I/O unit:Indications 63
EA11 EAG -Compact I/O unit:Commands 65
EA11 EAG -Compact I/O unit:Analog values 67
EA12 EAG -Compact I/O unit:Indications 70
EA12 EAG -Compact I/O unit:Commands 72
EA12 EAG -Compact I/O unit:Analog values 73
EA13 EAG -Compact I/O unit:Indications 75
EA13 EAG -Compact I/O unit:Commands 77
EA13 EAG -Compact I/O unit:Analog values 79
EA15 EAG -Compact I/O unit:Indications 82
EA15 EAG -Compact I/O unit:Commands 84
EA15 EAG -Compact I/O unit:Analog values 86
EA16 EAG -Compact I/O unit:Indications 89
EA16 EAG -Compact I/O unit:Commands 91
EA16 EAG -Compact I/O unit:Analog values 92
EA17 EAG -Compact I/O unit:Indications 95
EA17 EAG -Compact I/O unit:Commands 97
EA17 EAG -Compact I/O unit:Analog values 99

Proprietary data, company confidential. All rights reserved
Confia a tfre de secret d'entreprise. Tous droits reservis.
Comunicado como segredo empresarial. Reservados todos os direitos.
Confiado como secreto industrial. Nos reservamos todos los derechos.
The reproduction, transmission or use of this document or its
is not permitted without expres written authority.
Offenders will be liable for damages. All rights, including rights
created by patent grant or registration of a utility model or design, are reserved

Documentation structur: Standard
Source file: KO050722.ODA

Page

EA18 EAG -Compact I/O unit:Indications 102
EA18 EAG -Compact I/O unit:Commands 104
EA18 EAG -Compact I/O unit:Analog values 106
EA19 EAG -Compact I/O unit:Indications 109
EA19 EAG -Compact I/O unit:Commands 111
EA19 EAG -Compact I/O unit:Analog values 113
EA20 EAG -Compact I/O unit:Indications 116
EA20 EAG -Compact I/O unit:Commands 118
EA20 EAG -Compact I/O unit:Analog values 120
EA21 EAG -Compact I/O unit:Indications 123
EA21 EAG -Compact I/O unit:Commands 125
EA21 EAG -Compact I/O unit:Analog values 127
EA23 EAG -Compact I/O unit:Indications 130
EA23 EAG -Compact I/O unit:Commands 132
EA23 EAG -Compact I/O unit:Analog values 134
K01 EAG -Compact I/O unit:Indications 137
K01 EAG -Compact I/O unit:Commands 139
K01 EAG -Compact I/O unit:Analog values 140
K02 EAG -Compact I/O unit:Indications 143
K02 EAG -Compact I/O unit:Commands 145
K02 EAG -Compact I/O unit:Analog values 146

T=/BJOverview of mini bay units

T=/BMHigher-level information

Derived metered value 1
Internally generated indication 3

Page

Flag setting 9

Simulated voltage 18

Status indications/system indications/reference time 19

Monitoring indication 57

T=/BPProcessing

Function for command derivation -Alarm 1 (Hupenbefehl) 1

Function for command derivation -Ereignisgesteuerte Messwertarchivierung 2

Function for command derivation -Feldsperre 3

Function for command derivation -FP-Livekontakt 4

Function for command derivation -LED EIN/AUS 5

Function for command derivation -LED TEST 6

Function for command derivation -Messwertanstoss Kupplung aus 7

Function for command derivation -Stop 7VK 8

Function for command derivation -TR Reglerarteinstellung 9

Function for command derivation -TR Sollwerteinstellung 10

Function for indication derivation -7SJ511 POSOBENIE PLAST OCHR 12

Function for indication derivation -7SJ511 ROZPENIE OCHRANAMIE 13

Function for indication derivation -7SJ512 OCHRANA NADOBY VYPNUTI 14

Function for indication derivation -7SJ512 ROZPOJINIE OCHRANAMIE 15

Function for indication derivation -FELDMERKER FUER GAENDE VOM EAG 16

Function for indication derivation -KA2 NADRP.OCHR.POSOBENIE 17

Function for indication derivation -KA4 NADRP.OCHR.POSOBENIE 18

Function for indication derivation -KVIT 8TK 19

Function for indication derivation -LA1 BUCHHOLZ 20

Function for indication derivation -LA109 NADRP.OCHR.POSOBENIE 21

The reproduction, transmission or use of this document or its contents is not permitted without express written authority. Offenders will be liable for damages. All rights, including rights created by patent grant or registration of a utility model or design, are reserved. Proprietary data, company confidential. All rights reserved. Confie a titre de secret d'entreprise. Tous droits reservés. Comunicado como segredo empresarial. Reservados todos os direitos. Confiado como secreto industrial. Nos reservamos todos los derechos.

Documentation structur: Standard
Source file: KO050722.ODA

Rev.	Remarks	Date	Name	Date	22.07.2005	VSZ KOSICE	SIEMENS AG ISAOOLS	Substation control system 6MB List of contents	A	= /BA 9
				Drawn	LANG					+
				Appr.						-S100
				Norm		Orig./Repl. 1/Repl. by		Document identification		Page 9

	Page
Function for indication derivation -LA203 NADRP.OCHR.POSOBENIE	22
Function for indication derivation -LA309 NADRP.OCHR.POSOBENIE	23
Function for indication derivation -LA403 NADRP.OCHR.POSOBENIE	24
Function for indication derivation -LA6 BUCHHOLZ	25
Function for indication derivation -POSBENI KOSTR.OCHR.	26
Function for indication derivation -TRAFOREGLER STUFUNG	27
Function for indication derivation -TRAFOSTUFEN T201 Q,X,Y	28
Function for indication derivation -TRAFOSTUFEN T201 Q,X,Z	31
Function for indication derivation -TRAFOSTUFEN T201 Q,Y,Z	34
Function for indication derivation -TRAFOSTUFEN T201 X,Y,Z	37
Function for indication derivation -TRAFOSTUFEN T202 Q,X,Y	40
Function for indication derivation -TRAFOSTUFEN T202 Q,X,Z	43
Function for indication derivation -TRAFOSTUFEN T202 Q,Y,Z	46
Function for indication derivation -TRAFOSTUFEN T202 X,Y,Z	49
Function for indication derivation -VERTEILER FÜR FELDMERKER UND STEUERBYTE	52
Function for indication derivation -VERTEILER TRAFOSTUFEN T201	53
Function for indication derivation -VERTEILER TRAFOSTUFEN T202	54
Function for indication derivation -Ztrata ss.-signal napeti	55
Function for indication processing -MB 1 - Erfassungsbearbeitung EAG	56
Function for indication processing -MB 1 - Erfassungsbearbeitung LZG	57
Function for indication processing -MB 2 - Feldsperrenbearbeitung EAG	58
Function for indication processing -MB 2 - Feldsperrenbearbeitung LZG	59
Function for special processing -FERNWIRKSPERRE	60
Function for special processing -GA NACH FELDSPERRE AUS	61
Function for special processing -SYNCHRO ABBRUCH	62

Proprietary data, company confidential. All rights reserved.
Confie a titre de secret d'entreprise. Tous droits reservés.
Comunicado como segredo empresarial. Reservados todos os direitos.
Confiado como secreto industrial. Nos reservamos todos los derechos.

The reproduction, transmission or use of this document or its is not permitted without express written authority.
Offenders will be liable for damages. All rights, including rights created by patent grant or registration of a utility model or design, are reserved.

Documentation structur: Standard
Source file: KO050722.ODA

			Date	22.07.2005	VSZ KOSICE	SIEMENS AG ISA TOOLS	Substation control system 6MB List of contents	A = /BA 10 +	
			Drawn	LANG					
			Appr.						
F	Remarks	Date	Name	Norm	Orig./Repl. 1/Repl. by		Document identification	-S100	Page

Proprietary data, company confidential. All rights reserved.
Confia a tine de secret d'entreprise. Tous droits reservs.
Comunicado como segredo empresarial. Reservados todos os direitos.
Contado como secreto industrial. Nos reservamos todos los derechos.
The reproduction, transmission or use of this document or its
is not permitted without expres written authority.
Offenders will be liable for damages. All rights, including rights
created by patent grant or registration of a utility model or design, are reserved

Documentation structur: Standard
Source file: KO050722.ODA

Page

Function for special processing -TR BEI MELDUNG=NAK NICHT AN LISTE 63
Function for special processing -TR BEI SOLL=IST NICHT AN LISTE 64
Function for special processing -TR QUITTUNG AN TRAFOREGLER 65
Function for special processing -TR QUITTUNG BEI UMSCHALTUNG AUF AUTO 66
Function for special processing -VERTEILER FÜR FWS UND SYNCHRO ABBRUCH 67
Function for special processing -VERTEILER FÜR SOLL=IST, QUITT & NAK 68
Function for voltage simulation -Nachgebildete Frequenz 1 69
Function for voltage simulation -Nachgebildete Frequenz 2 70
Function for voltage simulation -Nachgebildete Spannung Feld 5 71
Function for voltage simulation -Nachgebildete Winkel Feld 5 72
Function for voltage simulation -Verteiler Frek1,2,Winkel,Spannung 73

T=/BQControl

Function for higher-level interlocking -UV 1 Übergeordnete Verriegelung 1
Function for operating sequence jump step -SY Sprungfunktion 3
Function for switch interlocking -BEI UL1-L2 >70% DA01 4
Function for switch interlocking -BEI UL1-L2 >70% DA02 5
Function for switch interlocking -SCHALTVERRIEGELUNG FÜR FERNSTEUERUNG 6
Function for switch interlocking -SCHALTVERRIEGELUNG Q8 bei UG1 L1 7
Function for switch interlocking -Stufengleichheit T201 8
Function for switch interlocking -Stufengleichheit T202 9
Function for variable operating sequences -Regelarteinstellung Verteiler 10
Function for variable operating sequences -Sollwerteinstellung Verteiler 11
Function for variable operating sequences -Synchr. Kupplung Unsyn ein 12
Function for variable operating sequences -Synchronisierung 10KV 13
Function for variable operating sequences -Synchronisierung 110KV 17

Proprietary data, company confidential. All rights reserved.
Confie a titre de secret d'entreprise. Tous droits r,serv,s.
Comunicado como segredo empresarial. Reservados todos os direitos.
Confiado como secreto industrial. Nos reservamos todos los derechos.

The reproduction, transmission or use of this document or its is not permitted without express written authority.
Offenders will be liable for damages. All rights, including rights created by patent grant or registration of a utility model or design, are reserved

Documentation structur: Standard
Source file: KO050722.ODA

Page

Function for variable operating sequences -Synchronisierung Kupplung 7VK512 20
Function for variable operating sequences -Synchronisierung Messanstoss 21
Function for variable operating sequences -Synchronisierung Messanstoss 10KV 23
Function for variable operating sequences -Synchronisierung Messanstoss intern 27
Function for variable operating sequences -Synchronisierung mit LSA (Verteiler) 30
Function for variable operating sequences -TR Reglerarteinstellung 31
Function for variable operating sequences -TR Reglerarteinstellung T102 32
Function for variable operating sequences -TR Sollwerteinstellung 33
Function for variable operating sequences -TR Sollwerteinstellung 102 35
Function for variable operating sequences -Trafostufung 37

T=/BROperating

Function for diagram display -BE 01 Ü-Bild Leistungs.Trenner 20/110kV 1
Function for diagram display -BE 02 Schalter 20/110/220kV 3
Function for diagram display -BE 08 Meßwert 6
Function for diagram display -BE 11 Stufenstellung 8
Function for diagram display -BE 14 8TK 16
Function for diagram display -BE 14 Feldsperre Sollbl. 17
Function for diagram display -BE 18 Stufengleichheit 19
Function for diagram display -BE 21 Kommend/gehend 20
Function for diagram display -BE 23 Kommend/gehend quittiert 21
Function for diagram display -BE 26 Kommend/gehend Reservetrafo 22

T=/BSDiagrams

B. Ereignisliste -Event list for VDU 1
B. Meldebereichsbild -Indication area diagram 2
B. Meldebereichsbild - sum flag for a voltage level and bay 3

			Date	22.07.2005	VSZ KOSICE	SIEMENS AG ISAOOLS	Substation control system 6MB List of contents	A = /BA 12 +	
			Drawn	LANG					
			Appr.					-S100	Page
F	Remarks	Date	Name Norm		Orig./Repl. 1/Repl. by		Document identification		

	Page
B. Meldebereichsbild - sum flag for alarm lists	4
B. Meldebereichsbild - date/time display	5
B. Meldebereichsbild leer -Indication area diagram	6
B. Warnmeldeliste -Alarm list for the VDU	7
Detailbild 1 Kosice -Detailed diagram	8
Detailbild 1 Kosice - indication fields	9
Detailbild 1 Kosice - analog value fields	13
Detailbild 2 Kosice -Detailed diagram	14
Detailbild 2 Kosice - indication fields	15
Detailbild 2 Kosice - analog value fields	19
Detailbild 3 Kosice -Detailed diagram	20
Detailbild 3 Kosice - indication fields	21
Detailbild 3 Kosice - analog value fields	27
Detailbild 4 Kosice -Detailed diagram	28
Detailbild 4 Kosice - indication fields	29
Detailbild 4 Kosice - analog value fields	33
Detailbild 5 Kosice -Detailed diagram	34
Detailbild 5 Kosice - indication fields	35
Detailbild 5 Kosice - analog value fields	39
Detailbild 6 Kosice -Detailed diagram	40
Detailbild 6 Kosice - indication fields	41
Detailbild 6 Kosice - analog value fields	45
Detailbild 7 Kosice -Detailed diagram	46
Detailbild 7 Kosice - indication fields	47
Detailbild 7 Kosice - analog value fields	53

The reproduction, transmission or use of this document or its is not permitted without expres written authority. Offenders will be liable for damages. All rights, including rights created by patent grant or registration of a utility model or design, are reserved

Proprietary data, company confidential. All rights reserved. Confie a titre de secret d'entreprise. Tous droits r.serv.s. Comunicado como segredo empresarial. Reservados todos os direitos. Confiado como secreto industrial. Nos reservamos todos los derechos.

Documentation structur: Standard
Source file: KO050722.ODA

Rev.	Remarks	Date	Name	Date	22.07.2005	VSZ	SIEMENS AG	Substation control system 6MB	A	=	/BA 13
				Drawn	LANG	KOSICE	ISA TOOLS	List of contents		+	
				Appr.						-S100	Page 13
				Norm		Orig./Repl. 1/Repl. by		Document identification			

	Page
Detailbild TRAFO 1 -Detailed diagram	54
Detailbild TRAFO 1 - selection fields -	55
Detailbild TRAFO 1 - indication fields	56
Detailbild TRAFO 1 - analog value fields	60
Detailbild TRAFO 2 -Detailed diagram	61
Detailbild TRAFO 2 - selection fields -	62
Detailbild TRAFO 2 - indication fields	63
Detailbild TRAFO 2 - analog value fields	67
Übersichtsbild 220KV Kosice -Overview diagram	68
Übersichtsbild 220KV Kosice - selection fields -	69
Übersichtsbild 220KV Kosice - indication fields	70
Übersichtsbild 220KV Kosice - analog value fields	74
Übersichtsbild Kosice -Overview diagram	76
Übersichtsbild Kosice - indication fields	77
Übersichtsbild Kosice - analog value fields	81

T=/BUInterface assignment

Interface assignment FP / SC1 / SC2	1

The reproduction, transmission or use of this document or its is not permitted without express written authority. Offenders will be liable for damages. All rights, including rights created by patent grant or registration of a utility model or design, are reserved

Proprietary data, company confidential. All rights reserved. Confie a titre de secret d'entreprise. Tous droits reservs. Comunicado como segredo empresarial. Reservados todos os direitos. Confiado como secreto industrial. Nos reservamos todos los derechos.

Documentation structur: Standard
Source file: KO050722.ODA

			Date	22.07.2005	VSZ KOSICE	SIEMENS AG ISA TOOLS	Substation control system 6MB List of contents	A	=	/BA 14
			Drawn	LANG					+	
			Appr.						-S100	Page
R	Remarks	Date	Name	Norm	Orig./Repl. 1/Repl. by		Document identification			

A	Always
AAIC	Acquisition on actual indication change
AD	Analog value direct
ADT	After delay time
AEF	Acquisition when filter time elapses
AIC	Actual indication change
AUX	Auxiliary flag
BIP	Bipolar
BP	Bit pattern
C	On cleared
C/R	Close/raised
CHAR	Character
CO	Continuous output
CUR	Current
DBI	Intermediate position
DC	Double command
DEP	Dependent
DI	Double indication
DS	Digital setpoint
EC	Event controlled
EDT	After delay time has elapsed
EI	If indication pending
EST	After smoothing time elapses
EXTO	On external initiation
F	Frequency
FIG	Figure
FV	With fixed value
HWT	Hardware termination
IN	Information
INVSC	Inverted single command
IV	Invalid
LL	Lower limit
LOCO	Long command output
LZM	Live zero monitoring
MVC	Mean value calculation
N	No
NSTDC	No standard code
NSWT	No software termination
NT	Not topical
NV	Numeric value
O/C	Open/cleared
P	Active power
Perm	Permanent
PF	Power factor
PO	Pulse output
POP	By operation
Q	Reactive power
R	On raised
R/C	On raised and cleared
SC	Single command
SHCO	Short command output
SI	Single indication
SOCN	Deactivation after number of cycles
SP	Setpoint
SWT	Software termination
SY	Symbol
TAF	Termination after feedback
TAT	Termination after time
TDEP	Time-dependent
TI	Transient indication
TR	From 'limit value setting'
UL	Upper limit
UNI	Unipolar
V PH	Phase voltage
V PH-PH	Phase-to-phase voltage
VAL	Valid
Y	Yes

Proprietary data, company confidential. All rights reserved.
Confie a titre de secret d'entreprise. Tous droits reservs.
Comunicado como segredo empresarial. Reservados todos os direitos.
Confiado como secreto industrial. Nos reservamos todos los derechos.

The reproduction, transmission or use of this document or its
is not permitted without expres written authority.
Offenders will be liable for damages. All rights, including rights
created by patent grant or registration of a utility model or design, are reserved

Documentation structur: Standard
Source file: KO050722.ODA

Rev.	Remarks	Date	Name	Date	22.07.2005	VSZ KOSICE	SIEMENS AG ISA TOOLS	Substation control system 6MB Abbreviation list	T = /BC 1
				Drawn	LANG				+
				Appr.					
				Norm		Orig./Repl. 1/Repl. by		Table	-S102 Page 1

Station: UW KOSICE
Device: D01 EAG
Module: AE01
Number: 1

Analog channel no.	Connect designation	Section	Bay	Logical device	Lower limit	Analog range	Display value	Dimension	Zero suppression f. display in %	Bay blockage	Thres val. for switchover in %	Process analog value in I/O uni	Knee point: Acquisition value in mA	Knee point: Display value	With live-zero monitoring	Display in diagram
1	Z32/D32	R220	T201	MESSW. SPANNUNG	NAPATIE L1-L2	20 mA	220.00	KV	10.0	N	0.0	N			PV	Y
2	Z30/D30	R220	T201	MESSW. SPANNUNG	NAPATIE L1-L3	20 mA	220.00	KV	10.0	N	0.0	N			PV	Y
3	Z28/D28	R220	T201	MESSW. SPANNUNG	NAPATIE L2-L3	20 mA	220.00	KV	10.0	N	0.0	N			PV	Y
4	Z26/D26	R220	T201		COS FI	20 mA	1.00	GRAD	PV	N	0.0	N	0.00	-1.00	PV	Y
5	Z24/D24	R220	T201		CINNY VYKON	20 mA	228.63	MW	1.0	N	0.0	N			PV	Y
6	Z22/D22	R220	T201		JALOVY VYKON	20 mA	228.63	MW	1.0	N	0.0	N			PV	Y
7	Z20/D20	R220	T201	MESSWERTE STROM	PRUD L1	20 mA	600.00	A	1.0	N	0.0	N			PV	Y
8	Z18/D18	R220	T201	MESSWERTE STROM	PRUD L2	20 mA	600.00	A	1.0	N	0.0	N			PV	Y
9	Z16/D16	R220	T201	MESSWERTE STROM	PRUD L3	20 mA	600.00	A	1.0	N	0.0	N			PV	Y
10	Z14/D14	R220	T201	MESSW. SPANNUNG DA01	NAPATIE L1-L2	20 mA	220.00	KV	10.0	N	0.0	N			PV	Y
11	Z12/D12	R220	T201	MESSW. SPANNUNG DA01	NAPATIE L1-L3	20 mA	220.00	KV	10.0	N	0.0	N			PV	N
12	Z10/D10	R220	T201	MESSW. SPANNUNG DA01	NAPATIE L2-L3	20 mA	220.00	KV	10.0	N	0.0	N			PV	N
13	Z8/D8	R220	T201		FREKVENCIA	20 mA	55.00	Hz	PV	N	0.0	N	0.00	45.00	PV	Y
14	Z6/D6					20 mA									PV	
15	Z4/D4					20 mA									PV	
16	Z2/D2					20 mA									PV	

Proprietary data, company confidential. All rights reserved.
Confie a titre de secret d'entreprise. Tous droits r,serv,s.
Comunicado como segredo empresarial. Reservados todos os direitos.
Confiado como secreto industrial. Nos reservamos todos los derechos.

The reproduction, transmission or use of theis document or its is not permitted without expres written authority.
Offenders will be liable for damages. All rights, including rights created by patent grant or registration of a utility model or design, are reserved

Documentation structur: Standard
Source file: KO050722.ODA

Remarks	Date	Name	Date	22.07.2005	VSZ KOSICE	SIEMENS AG ISA TOOLS	Substation control system 6MB
			Drawn	LANG			Analog input module:
			Appr.				Analog values
			Norm		Orig./Repl. 1/Repl. by		Table

T = /BD 1
+
-S103
Page

Station: UW KOSICE
Device: D01 EAG
Module: AE01
Number: 1

Analog channel no.	Connect designation	Archive	Analog recording	Recording mode	No. of val. to be averaged	Scan interval in s	Analog value type	Max. value of analog value	Keep non-return pointer	Calculated demand value	Derive percentage value
1	Z32/D32	Y	PERM	Analog value direct		900	PPV	264.00	PV	PV	PV
2	Z30/D30	Y	PERM	Analog value direct		900	PPV	264.00	PV	PV	PV
3	Z28/D28	Y	PERM	Analog value direct		900	PPV	264.00	PV	PV	PV
4	Z26/D26	Y	PERM	Analog value direct		900	PF	1.00	PV	PV	PV
5	Z24/D24	Y	PERM	Analog value direct		900	AP	274.40	PV	PV	PV
6	Z22/D22	Y	PERM	Analog value direct		900	RP	274.40	PV	PV	PV
7	Z20/D20	Y	PERM	Analog value direct		900	CUR	720.00	PV	PV	PV
8	Z18/D18	Y	PERM	Analog value direct		900	CUR	720.00	PV	PV	PV
9	Z16/D16	Y	PERM	Analog value direct		900	CUR	720.00	PV	PV	PV
10	Z14/D14	Y	PERM	Analog value direct		900	PPV	264.00	PV	PV	PV
11	Z12/D12	Y	PERM	Analog value direct		900	PPV	264.00	PV	PV	PV
12	Z10/D10	Y	PERM	Analog value direct		900	PPV	264.00	PV	PV	PV
13	Z8/D8	Y	PERM	Analog value direct		900	F	55.00	PV	PV	PV
14	Z6/D6										
15	Z4/D4										
16	Z2/D2										

Proprietary data, company confidential. All rights reserved.
Confia a tres de secret dentreprise. Tous droits r,serv,s.
Comunicado como segredo empresarial. Reservados todos os direitos.
Confiado como secreto industrial. Nos reservamos todos los derechos.
The reproduction, transmission or use of this document or its contents is not permitted without express written authority. Offenders will be liable for damages. All rights, including rights created by patent grant or registration of a utility model or design, are reserved.

Documentation structur: Standard
Source file: KO050722.ODA

Rev.	Remarks	Date	Name	Norm	Date 22.07.2005	Drawn LANG	Appr.	Orig./Repl. 1/Repl. by

VSZ KOSICE

SIEMENS AG
ISATOOLS

Substation control system 6MB
Analog input module:
Analog values
Table

T = /BD 2
+
-S103
Page 2

Station: UW KOSICE
Device: D01 EAG
Module: AE01
Number: 1

Analog channel no.	Connect designation	Static limit monitoring: Filtering time in s	Lower limit 1	Indication at lower limit 1	Lower limit 2	Indication at lower limit 2	Upper limit 1	Indication at higher limit 1	Upper limit 2	Indication at higher limit 2	Teletrans. FP raw val. Master station	Name of telegram	Name of info element
1	Z32/D32	0	198.00	NAPATIE L1-L2 DH1	154.00	NAPATIE L1-L2 DH2	245.00	NAPATIE L1-L2 HH1			IEC 870-5-101	Meßwerttelegramm	920
2	Z30/D30	0	198.00	NAPATIE L1-L3 DH1	154.00	NAPATIE L1-L3 DH2	245.00	NAPATIE L1-L3 HH1			IEC 870-5-101	Meßwerttelegramm	921
3	Z28/D28	0	198.00	NAPATIE L2-L3 DH1	154.00	NAPATIE L2-L3 DH2	245.00	NAPATIE L2-L3 HH1			IEC 870-5-101	Meßwerttelegramm	922
4	Z26/D26										IEC 870-5-101	Meßwerttelegramm	923
5	Z24/D24										IEC 870-5-101	Meßwerttelegramm	924
6	Z22/D22										IEC 870-5-101	Meßwerttelegramm	925
7	Z20/D20	0					719.90	PRUD L1 HH1			IEC 870-5-101	Meßwerttelegramm	926
8	Z18/D18	0					719.90	PRUD L2 HH1			IEC 870-5-101	Meßwerttelegramm	927
9	Z16/D16	0					719.90	PRUD L3 HH1			IEC 870-5-101	Meßwerttelegramm	928
10	Z14/D14	0	198.00	NAPATIE L1-L2 DH1	154.00	NAPATIE L1-L2 DH2	245.00	NAPATIE L1-L2 HH1			IEC 870-5-101	Meßwerttelegramm	930
11	Z12/D12	0	198.00	NAPATIE L1-L3 DH1	154.00	NAPATIE L1-L3 DH2	245.00	NAPATIE L1-L3 HH1			IEC 870-5-101	Meßwerttelegramm	931
12	Z10/D10	0	198.00	NAPATIE L2-L3 DH1	154.00	NAPATIE L2-L3 DH2	245.00	NAPATIE L2-L3 HH1			IEC 870-5-101	Meßwerttelegramm	932
13	Z8/D8	1	49.50	FREKVENCIA DH1			50.50	FREKVENCIA HH1			IEC 870-5-101	Meßwerttelegramm	933
14	Z6/D6												
15	Z4/D4												
16	Z2/D2												

Proprietary data, company confidential. All rights reserved.
Confiaa tre de secret dentreprise. Tous droits r.serv.s
Comunicado como segredo empresarial. Reservados todos os direitos.
Confiado como secreto industrial. Nos reservamos todos los derechos.
The reproduction, transmission or use of this document or its contents is not permitted without express written authority.
Offenders will be liable for damages. All rights, including rights created by patent grant or registration of a utility model or design, are reserved.

Documentation structur: Standard
Source file: KO050722.ODA

Date	22.07.2005	VSZ KOSICE	SIEMENS AG ISAOOLS	Substation control system 6MB
Drawn	LANG			Analog input module:
Appr.				Analog values
Norm				Table
Remarks	Date	Name	Orig./Repl. 1/Repl. by	

T = /BD 3
+
-S103
Page

Station: UW KOSICE
Device: D01 EAG
Module: AE02
Number: 2

Analog channel no.	Connect designation	Section	Bay	Logical device	Lower limit	Analog range	Display value	Dimension	Zero suppression f. display in %	Bay blockage	Zero suppression on acq. in %	Thres val. for switchover in %	Process analog value in I/O uni	With live-zero monitoring	Display in diagram	Archive	Analog recording	Recording mode	No. of val. to be averaged	Scan interval in s	Analog value type	Max. value of analog value	Keep non-return pointer
1	Z32/D32	R220	T201		TEPLOTA TRANSF.JEDN.L1	20 mA	150.00	GRAD	PV	N	1.0	0.0	N	PV	Y	Y	PERM	Analog value direct		900	CUR	180.00	PV
2	Z30/D30	R220	T201		TEPLOTA TRANSF.JEDN.L2	20 mA	150.00	GRAD	PV	N	1.0	0.0	N	PV	Y	Y	PERM	Analog value direct		900	CUR	180.00	PV
3	Z28/D28	R220	T201		TEPLOTA TRANSF.JEDN.L3	20 mA	150.00	GRAD	PV	N	1.0	0.0	N	PV	Y	Y	PERM	Analog value direct		900	CUR	180.00	PV
4	Z26/D26					20 mA								PV									
5	Z24/D24					20 mA								PV									
6	Z22/D22					20 mA								PV									
7	Z20/D20					20 mA								PV									
8	Z18/D18					20 mA								PV									
9	Z16/D16					20 mA								PV									
10	Z14/D14					20 mA								PV									
11	Z12/D12					20 mA								PV									
12	Z10/D10					20 mA								PV									
13	Z8/D8					20 mA								PV									
14	Z6/D6					20 mA								PV									
15	Z4/D4					20 mA								PV									
16	Z2/D2					20 mA								PV									

The reproduction, transmission or use of this document or its contents is not permitted without express written authority. Offenders will be liable for damages. All rights, including rights created by patent grant or registration of a utility model or design, are reserved. Proprietary data, company confidential. All rights reserved. Confie a titre de secret d'entreprise. Tous droits reservés. Comunicado como segredo empresarial. Reservados todos os direitos. Confiado como secreto industrial. Nos reservamos todos los derechos.

Documentation structur: Standard
Source file: KO050722.ODA

Rev.	Remarks	Date	Name	Date	22.07.2005	VSZ KOSICE	SIEMENS AG ISAOOLS	Substation control system 6MB
				Drawn	LANG			Analog input module:
				Appr.				Analog values
				Norm		Orig./Repl. 1/Repl. by		Table

T = /BD 4
+
-S103
Page 4

Station: UW KOSICE
Device: D01 EAG
Module: AE02
Number: 2

Analog channel no.	Connect designation	Calculated demand value	Derive percentage value	Static limit monitoring: Filtering time in s	Lower limit 1	Indication at lower limit 1	Lower limit 2	Indication at lower limit 2	Upper limit 1	Indication at higher limit 1	Upper limit 2	Indication at higher limit 2	Teletrans. FP raw val. Master station	Name of telegram	Name of info element
1	Z32/D32	PV	PV	0					70.00	TEPLOTA TRANSF.JEDN.L1 HH1	80.00	TEPLOTA TRANSF.JEDN.L1 HH2	IEC 870-5-101	Meßwerttelegramm	934
2	Z30/D30	PV	PV	0					70.00	TEPLOTA TRANSF.JEDN.L2 HH1	80.00	TEPLOTA TRANSF.JEDN.L2 HH2	IEC 870-5-101	Meßwerttelegramm	935
3	Z28/D28	PV	PV	0					70.00	TEPLOTA TRANSF.JEDN.L3 HH1	80.00	TEPLOTA TRANSF.JEDN.L3 HH2	IEC 870-5-101	Meßwerttelegramm	936
4	Z26/D26														
5	Z24/D24														
6	Z22/D22														
7	Z20/D20														
8	Z18/D18														
9	Z16/D16														
10	Z14/D14														
11	Z12/D12														
12	Z10/D10														
13	Z8/D8														
14	Z6/D6														
15	Z4/D4														
16	Z2/D2														

Proprietary data, company confidential. All rights reserved.
Confie a titre de secret d'entreprise. Tous droits réservés.
Comunicado como segredo empresarial. Reservados todos os direitos.
Confiado como secreto industrial. Nos reservamos todos los derechos.
The reproduction, transmission or use of this document or its is not permitted without express written authority.
Offenders will be liable for damages. All rights, including rights created by patent grant or registration of a utility model or design, are reserved.

Documentation structur: Standard
Source file: KO050722.ODA

			Date	22.07.2005	VSZ KOSICE	SIEMENS AG SAIOOLS	Substation control system 6MB	T = /BD 5			
			Drawn	LANG			Analog input module:	+			
			Appr.				Analog values		-S103	Page	
F	Remarks	Date	Name Norm		Orig./Repl. 1/Repl. by		Table				

Station: UW KOSICE
Device: D01 EAG
Module: BM01
Number: 1

With mcb: No
Last input with: Freely marshalable

Input	Connect designation	Section	Bay	Logical device	Lower limit	Value text	Column section	Column bay	Column logical device	Column information	Column value text	With command	Indication type	Entry in event list	Entry in alarm list	Acknowledge	Display in indication area	Indication class	Entry in SML	Display in diagram	Display of intermed. pos.	Acknowledge	Display under voltage level	Indication class	Archive	Operational indications	Protection indications	Filt. of raised & cleared	Filtering of intermed. pos.
1	B22	R220	DA01	ODPOJOVAC Q1	SCHALTZUSTAND	vyp.	22	27	39	0	75	LZM	DI	O					N	Y	N	O	Y	2	R	Y	N		N
2	Z22	R220	DA01	ODPOJOVAC Q1	SCHALTZUSTAND	zap.	22	27	39	0	75	LZM	DI	O					N	Y	N	O	Y	2	R	Y	N		N
3	D24	R220	DA01	VYPINAC Q0	SCHALTZUSTAND	vyp.	22	27	39	0	75	LZM	DI	O					N	Y	N	O	Y	2	R	Y	N		N
4	B24	R220	DA01	VYPINAC Q0	SCHALTZUSTAND	zap.	22	27	39	0	75	LZM	DI	O					N	Y	N	O	Y	2	R	Y	N		N
5	Z24	R220	DA01	ODPOJOVAC Q6	SCHALTZUSTAND	vyp.	22	27	39	0	75	LZM	DI	O					N	Y	N	O	Y	2	R	Y	N		N
6	D26	R220	DA01	ODPOJOVAC Q6	SCHALTZUSTAND	zap.	22	27	39	0	75	LZM	DI	O					N	Y	N	O	Y	2	R	Y	N		N
7	B26	R220	DA01	ODPOJOVAC QE6	SCHALTZUSTAND	vyp.	22	27	39	0	75	LZM	DI	O					N	Y	N	O	Y	2	R	Y	N		N
8	Z26	R220	DA01	ODPOJOVAC QE6	SCHALTZUSTAND	zap.	22	27	39	0	75	LZM	DI	O					N	Y	N	O	Y	2	R	Y	N		N
9	D28	R220	DA01	ODPOJOVAC Q7	SCHALTZUSTAND	vyp.	22	27	39	0	75	LZM	DI	O					N	Y	N	O	Y	2	R	Y	N		N
10	B28	R220	DA01	ODPOJOVAC Q7	SCHALTZUSTAND	zap.	22	27	39	0	75	LZM	DI	O					N	Y	N	O	Y	2	R	Y	N		N
11	Z28	R220	DA01		8TK PORUCHA	KON ZAC	22	27	0	39	75	PV	SI	R/C	Y	R/C	Y	1	N	N					R/C	Y	N	N	
12	D30	R220	DA01		VYPN.VYPINAC.BEZ POVELU	KON ZAC	22	27	0	39	75	PV	TR	O	Y	O	Y	1	N	N					R	Y	N		
13	B30	R220	DA01		PREVADZKA S1	KON ZAC	22	27	0	39	75	PV	SI	R/C	Y	R/C	Y	1	N	Y		N	N		R/C	Y	N	N	
14	Z30	R220	DA01		S5 POLOHA VYPN./MIESTNE	KON ZAC	22	27	0	39	75	PV	SI	R/C	Y	R/C	Y	1	N	Y		N	N		R/C	Y	N	N	
15	D32	R220	DA01		CHYBA OBSLUHY	KON ZAC	22	27	0	39	75	PV	SI	R/C	N				N	N					R/C	Y	N	N	
16	B32	R220	DA01		PREKROCENIE CASU BEHU	KON ZAC	22	27	0	39	75	PV	SI	R/C	N				N	N					R/C	Y	N	N	

Proprietary data, company confidential. All rights reserved.
Confie a titre de secret d'entreprise. Tous droits réservés.
Comunicado como segredo empresarial. Reservados todos os direitos.
Confiado como secreto industrial. Nos reservamos todos los derechos.

The reproduction, transmission or use of this document or its
is not permitted without express written authority.
Offenders will be liable for damages. All rights, including rights
created by patent grant or registration of a utility model or design, are reserved.

Documentation structur: Standard
Source file: KO050722.ODA

Rev.	Remarks	Date	Name	Date	22.07.2005	VSZ KOSICE	SIEMENS AG ISAOOLS	Substation control system 6MB
				Drawn	LANG			Command and signalling module:
				Appr.				Input assignment
				Norm		Orig./Repl. 1/Repl. by		Table

T = /BD 6
+
-S103
Page 6

Station: UW KOSICE
Device: D01 EAG
Module: BM01
Number: 1

With mcb: No
Last input with: Freely marshalable

Input	Connect designation	Bay blockage	Monitored as feedback	Checkback monit. time in s	Command derivation	Indication derivation	Remote transmission FP: Master station	Name of telegram	Name of info element
1	B22	N	Y	20.0			IEC 870-5-101	Meldungstelegramm DM	521
2	Z22	N	Y	20.0			IEC 870-5-101	Meldungstelegramm DM	521
3	D24	N	Y	20.0			IEC 870-5-101	Meldungstelegramm DM	520
4	B24	N	Y	20.0			IEC 870-5-101	Meldungstelegramm DM	520
5	Z24	N	Y	20.0			IEC 870-5-101	Meldungstelegramm DM	522
6	D26	N	Y	20.0			IEC 870-5-101	Meldungstelegramm DM	522
7	B26	N	Y	20.0			IEC 870-5-101	Meldungstelegramm DM	523
8	Z26	N	Y	20.0			IEC 870-5-101	Meldungstelegramm DM	523
9	D28	N	Y	20.0			IEC 870-5-101	Meldungstelegramm DM	524
10	B28	N	Y	20.0			IEC 870-5-101	Meldungstelegramm DM	524
11	Z28	N	N		Alarm 1 (Hupenbefehl)	KVIT 8TK			
12	D30	N	N		Alarm 1 (Hupenbefehl)	KVIT 8TK			
13	B30	N	N		Alarm 1 (Hupenbefehl)				
14	Z30	N	N		Alarm 1 (Hupenbefehl)				
15	D32	N	N		Alarm 1 (Hupenbefehl)	KVIT 8TK			
16	B32	N	N		Alarm 1 (Hupenbefehl)	KVIT 8TK			

Proprietary data, company confidential. All rights reserved.
Confie a titre de secret d'entreprise. Tous droits réservés.
Comunicado como segredo empresarial. Reservados todos os direitos.
Confiado como secreto industrial. Nos reservamos todos los derechos.
The reproduction, transmission or use of this document or its is not permitted without express written authority.
Offenders will be liable for damages. All rights, including rights created by patent grant or registration of a utility model or design, are reserved.

Documentation structur: Standard
Source file: KO050722.ODA

			Date	22.07.2005	VSZ KOSICE	SIEMENS AG ISAOOLS	Substation control system 6MB	T = /BD 7
			Drawn	LANG			Command and signalling module:	+
			Appr.				Input assignment	-S103 Page
R	Remarks	Date	Name	Norm	Orig./Repl. 1/Repl. by		Table	

Station: UW KOSICE
Device: D01 EAG
Module: BM01
Number: 1

With mcb: No

Output	Connect designation	Section	Bay	Logical device	Lower limit	Value text	Column section	Column bay	Column logical device	Column information	Column value text	Type of command	Entry in event list	Entry in alarm list	Entry in SML	Display in diag. as select. field	Archive	Operational indications	Protection indications	Overtravel time in s	SW termination time in s	Checkback via: Device	Module	Input	Checkback monit. time in s
1	Z2/Z4	R220	DA01	ODPOJOVAC Q1	SCHALTZUSTAND	vyp.	22	27	39	0	75	DC	O		N	PV	R	Y	N	0.0		D01 EAG	BM01	1	20.0
2	D4/B4	R220	DA01	ODPOJOVAC Q1	SCHALTZUSTAND	zap.	22	27	39	0	75	DC	O		N	PV	R	Y	N	0.0		D01 EAG	BM01	1	20.0
3	D6/B6	R220	DA01	VYPINAC Q0	SCHALTZUSTAND	vyp.	22	27	39	0	75	DC	O		N	PV	R	Y	N	0.0		D01 EAG	BM01	3	20.0
4	Z6/Z8	R220	DA01	VYPINAC Q0	SCHALTZUSTAND	zap.	22	27	39	0	75	DC	O		N	PV	R	Y	N	0.0		D01 EAG	BM01	3	20.0
5	D8/B8	R220	DA01	ODPOJOVAC Q6	SCHALTZUSTAND	vyp.	22	27	39	0	75	DC	O		N	PV	R	Y	N	0.0		D01 EAG	BM01	5	20.0
6	D10/B10	R220	DA01	ODPOJOVAC Q6	SCHALTZUSTAND	zap.	22	27	39	0	75	DC	O		N	PV	R	Y	N	0.0		D01 EAG	BM01	5	20.0
7	Z10/Z12	R220	DA01	ODPOJOVAC QE6	SCHALTZUSTAND	vyp.	22	27	39	0	75	DC	O		N	PV	R	Y	N	0.0		D01 EAG	BM01	7	20.0
8	D12/B12	R220	DA01	ODPOJOVAC QE6	SCHALTZUSTAND	zap.	22	27	39	0	75	DC	O		N	PV	R	Y	N	0.0		D01 EAG	BM01	7	20.0
9	D14/B14	R220	DA01	ODPOJOVAC Q7	SCHALTZUSTAND	vyp.	22	27	39	0	75	DC	O		N	PV	R	Y	N	0.0		D01 EAG	BM01	9	20.0
10	Z14/Z16	R220	DA01	ODPOJOVAC Q7	SCHALTZUSTAND	zap.	22	27	39	0	75	DC	O		N	PV	R	Y	N	0.0		D01 EAG	BM01	9	20.0
11	D16/B16															PV									
12	D18/B18															PV									
14	D20/B20	R220	DA01		KVITOVANIE	KON ZAC	22	27	0	39	75	SC	O	N	N	PV	R	N	Y		0.6				
15	D22/Z20	R220	DA01		DEBLOKACIA BLOKOVANIA	KON ZAC	22	27	0	39	75	SC	R/C	N	N	PV	R/C	Y	N						

Proprietary data, company confidential. All rights reserved.
Confie a titre de secret d'entreprise. Tous droits réservés.
Comunicado como segredo empresarial. Reservados todos os direitos.
Confiado como secreto industrial. Nos reservamos todos los derechos.

The reproduction, transmission or use of this document or its is not permitted without express written authority.
Offenders will be liable for damages. All rights, including rights created by patent grant or registration of a utility model or design, are reserved.

Documentation structur: Standard
Source file: KO050722.ODA

Rev.	Remarks	Date	Name	Date	22.07.2005	VSZ KOSICE	SIEMENS AG ISA TOOLS	Substation control system 6MB
				Drawn	LANG			Command and signalling module:
				Appr.				Commands
				Norm		Orig./Repl. 1/Repl. by		Table

T = /BD 8
+
-S103
Page 8

Station: UW KOSICE
Device: D01 EAG
Module: BM01
Number: 1

With mcb: No

Output	Connect designation	Interlocking type:	Switch interlocking
1	Z2/Z4	SCHALTGERÄT	
2	D4/B4	SCHALTGERÄT	
3	D6/B6	SCHALTGERÄT	
4	Z6/Z8	SCHALTGERÄT	
5	D8/B8	SCHALTGERÄT	
6	D10/B10	SCHALTGERÄT	
7	Z10/Z12	SCHALTGERÄT	BEI UL1-L2 >70% DA01
8	D12/B12	SCHALTGERÄT	BEI UL1-L2 >70% DA01
9	D14/B14	SCHALTGERÄT	
10	Z14/Z16	SCHALTGERÄT	
11	D16/B16		
12	D18/B18		
14	D20/B20	SCHALTGERÄT	
15	D22/Z20	SCHALTGERÄT	

Proprietary data, company confidential. All rights reserved.
Confie a titre de secret d'entreprise. Tous droits réservés.
Comunicado como segredo empresarial. Reservados todos os direitos.
Confiado como secreto industrial. Nos reservamos todos los derechos.

The reproduction, transmission or use of this document or its is not permitted without express written authority. Offenders will be liable for damages. All rights, including rights created by patent grant or registration of a utility model or design, are reserved.

Documentation structur: Standard
Source file: KO050722.ODA

			Date	22.07.2005	VSZ KOSICE	SIEMENS AG ISA TOOLS	Substation control system 6MB Command and signalling module: Commands Table	T = /BD 9 +
			Drawn	LANG				
			Appr.					-S103 Page
F	Remarks	Date	Name	Norm	Orig./Repl. 1/Repl. by			

Station: UW KOSICE
Device: D01 EAG
Module: BM02
Number: 2

With mcb: No
Last input with: Freely marshalable

Input	Connect designation	Section	Bay	Logical device	Lower limit	Value text		Column section	Column bay	Column logical device	Column information	Column value text	With command	Indication type	Entry in event list	Entry in alarm list	Acknowledge	Display in indication area	Indication class	Entry in SML	Display in diagram	Archive	Operational indications	Protection indications	Filt. of raised & cleared	Bay blockage	Monitored as feedback	Command derivation
1	B22	R220	DA01		Q0 STRATA SF6	KON	ZAC	22	27	0	39	75	PV	SI	R/C	Y	R/C	Y	1	N	N	R/C	N	Y	N	N	N	Alarm 1 (Hupenbefehl)
2	Z22	R220	DA01		Q0 BLOKOV.VYP/ZAP 1.OBV	KON	ZAC	22	27	0	39	75	PV	SI	R/C	Y	R/C	Y	1	N	N	R/C	N	Y	N	N	N	Alarm 1 (Hupenbefehl)
3	D24	R220	DA01		Q0 STRATA STR.NAP.VYKUROV	KON	ZAC	22	27	0	39	75	PV	SI	R/C	Y	R/C	Y	1	N	N	R/C	N	Y	N	N	N	Alarm 1 (Hupenbefehl)
4	B24	R220	DA01		Q0 STRATA STR.NAP.POHONOV	KON	ZAC	22	27	0	39	75	PV	SI	R/C	Y	R/C	Y	1	N	N	R/C	N	Y	N	N	N	Alarm 1 (Hupenbefehl)
5	Z24	R220	DA01		POKLES TLAKU MER.TRAN.+3.5	KON	ZAC	22	27	0	39	75	PV	SI	R/C	Y	R/C	Y	1	N	N	R/C	N	Y	N	N	N	Alarm 1 (Hupenbefehl)
6	D26	R220	DA01		POKLES TLAKU MER.TRAN.+3	KON	ZAC	22	27	0	39	75	PV	SI	R/C	Y	R/C	Y	1	N	N	R/C	N	Y	N	N	N	Alarm 1 (Hupenbefehl)
7	B26	R220	DA01		VYPN.ISTICA NAPAJ.PREVOD.	KON	ZAC	22	27	0	39	75	PV	SI	R/C	Y	R/C	Y	1	N	N	R/C	N	Y	N	N	N	Alarm 1 (Hupenbefehl)
8	Z26																											
9	D28	R220	DA01		PARAL.REG.RUCNE-VIAG	KON	ZAC	22	27	0	39	75	PV	SI	R/C	N				N	N	R/C	Y	N	N	N	N	
10	B28	R220	DA01		PARAL.REG.RUCNE-MENEJ	KON	ZAC	22	27	0	39	75	PV	SI	R/C	N				N	N	R/C	Y	N	N	N	N	
11	Z28	R220	DA01		STRATA j.s.NAP. REGULACIE	KON	ZAC	22	27	0	39	75	PV	SI	R/C	Y	R/C	Y	1	N	N	R/C	N	Y	N	N	N	Alarm 1 (Hupenbefehl)
12	D30	R220	DA01		STRATA st. NAP. REGULACIE	KON	ZAC	22	27	0	39	75	PV	SI	R/C	Y	R/C	Y	1	N	N	R/C	N	Y	N	N	N	Alarm 1 (Hupenbefehl)
13	B30	R220	DA01		REGULACIA-RUCNE	KON	ZAC	22	27	0	39	75	PV	SI	R/C	N				N	N	R/C	Y	N	N	N	N	
14	Z30	R220	DA01		REGULACIA-VYPNUTA	KON	ZAC	22	27	0	39	75	PV	SI	R/C	N				N	N	R/C	Y	N	N	N	N	
15	D32	R220	DA01		REGULACIA-POCITAC	KON	ZAC	22	27	0	39	75	PV	SI	R/C	N				N	N	R/C	Y	N	N	N	N	
16	B32	R220	DA01		VYPN.ISTICA 100V,50Hz-V278	KON	ZAC	22	27	0	39	75	PV	SI	R/C	Y	R/C	Y	1	N	N	R/C	N	Y	N	N	N	Alarm 1 (Hupenbefehl)

Proprietary data, company confidential. All rights reserved
Confia a tina da secret de l'empresa. Tous droits reservs.
Comunicado como segredo empresarial. Reservados todos os direitos.
Confiado como secreto industrial. Nos reservamos todos los derechos.

The reproduction, transmission or use of this document or its contents is not permitted without express written authority. Offenders will be liable for damages. All rights, including rights created by patent grant or registration of a utility model or design, are reserved.

Documentation structure: Standard
Source file: KO050722.ODA

Rev.	Remarks	Date	Name		
				Date	22.07.2005
				Drawn	LANG
				Appr.	
				Norm	

VSZ KOSICE
Orig./Repl. 1/Repl. by

SIEMENS AG
ISATOOLS

Substation control system 6MB
Command and signalling module:
Input assignment
Table

T = /BD 10
+
-S103
Page 10

Station: UW KOSICE
Device: D01 EAG
Module: BM02
Number: 2

With mcb: No

Output	Connect designation	Section	Bay	Logical device	Lower limit	Value text	Column section	Column bay	Column logical device	Column information	Column value text	Type of command	Entry in event list	Entry in SML	Display in diag. as select. field	Archive	Operational indications	Protection indications	SW termination time in s	Interlocking type:	Switch interlocking
1	Z2/Z4	R220	T201	L1 TRAFO	ODBOCKA VO FAZE	MENEJ	22	27	0	39	75	DC	O	N	LZM	N			1.0	SCHALTGERÄT	
2	D4/B4	R220	T201	L1 TRAFO	ODBOCKA VO FAZE	VIAC	22	27	0	39	75	DC	O	N	LZM	N			1.0	SCHALTGERÄT	
3	D6/B6	R220	T201	L2 TRAFO	ODBOCKA VO FAZE	MENEJ	22	27	0	39	75	DC	O	N	LZM	N			1.0	SCHALTGERÄT	
4	Z6/Z8	R220	T201	L2 TRAFO	ODBOCKA VO FAZE	VIAC	22	27	0	39	75	DC	O	N	LZM	N			1.0	SCHALTGERÄT	
5	D8/B8	R220	T201	L3 TRAFO	ODBOCKA VO FAZE	MENEJ	22	27	0	39	75	DC	O	N	LZM	N			1.0	SCHALTGERÄT	
6	D10/B10	R220	T201	L3 TRAFO	ODBOCKA VO FAZE	VIAC	22	27	0	39	75	DC	O	N	LZM	N			1.0	SCHALTGERÄT	
7	Z10/Z12	R220	TR.	Q TRAFO	ODBOCKA VO FAZE	MENEJ	22	27	0	39	75	DC	O	N	LZM	N			1.0	SCHALTGERÄT	
8	D12/B12	R220	TR.	Q TRAFO	ODBOCKA VO FAZE	VIAC	22	27	0	39	75	DC	O	N	LZM	N			1.0	SCHALTGERÄT	
9	D14/B14	R220	T201		PARALELNA REGULACIA	MENEJ	22	27	0	39	75	DC	O	N	LZM	R	Y	N	1.0	SCHALTGERÄT	Stufengleichheit T201
10	Z14/Z16	R220	T201		PARALELNA REGULACIA	VIAC	22	27	0	39	75	DC	O	N	LZM	R	Y	N	1.0	SCHALTGERÄT	Stufengleichheit T201
11	D16/B16														PV						
12	D18/B18														PV						
14	D20/B20														PV						
15	D22/Z20														PV						

Proprietary data, company confidential. All rights reserved.
Confia a tire de secret d'entreprise. Tous droits reservis.
Comunicado como segredo empresarial. Reservados todos os direitos.
Confiado como secreto industrial. Nos reservamos todos los derechos.

The reproduction, transmission or use of this document or its is not permitted without express written authority.
Offenders will be liable for damages. All rights, including rights created by patent grant or registration of a utility model or design, are reserved.

Documentation structur: Standard
Source file: KO050722.ODA

Date	22.07.2005	VSZ KOSICE	SIEMENS AG ISAOOLS	Substation control system 6MB Command and signalling module: Commands Table	T = /BD 11
Drawn	LANG				+
Appr.					-S103
Norm		Orig./Repl. 1/Repl. by			Page

Remarks | Date | Name

Station: UW KOSICE
Device: D01 EAG
Module: DE01
Number: 1

Input	Connect designation	Section	Bay	Logical device	Lower limit	Value text		Column section	Column bay	Column logical device	Column information	Column value text	With command	Indication type	Entry in event list	Entry in alarm list	Acknowledge	Display in indication area	Indication class	Entry in SML	Display in diagram	Acknowledge	Display under voltage level	Indication class	Archive	Operational indications	Protection indications	Fill. of raised & cleared	Bay blockage	Monitored as feedback
1	Z32	R220	DA01		VYPN.ISTICA 100V,50Hz-U0	KON	ZAC	22	27	0	39	75	PV	SI	R/C	Y	R/C	Y	1	N	Y	N	N		R/C	N	Y	N	N	N
2	D32	R220	DA01		VYPN.ISTICA 100V,50Hz-HL.O.	KON	ZAC	22	27	0	39	75	PV	SI	R/C	Y	R/C	Y	1	N	Y	N	N		R/C	N	Y	N	N	N
3	Z30	R220	DA01		VYPN.ISTICA 100V,50Hz-ZAL.O.	KON	ZAC	22	27	0	39	75	PV	SI	R/C	Y	R/C	Y	1	N	Y	N	N		R/C	N	Y	N	N	N
4	D30	R220	DA01		VYPN.ISTICA 100V,50Hz-MERANIE	KON	ZAC	22	27	0	39	75	PV	SI	R/C	Y	R/C	Y	1	N	Y	N	N		R/C	N	Y	N	N	N
5	Z28	R220	DA01		VYPN.ISTICA 100V,50Hz-ELEMERY	KON	ZAC	22	27	0	39	75	PV	SI	R/C	Y	R/C	Y	1	N	Y	N	N		R/C	N	Y	N	N	N
6	D28	R220	DA01		STRATA NAPATIA +-1.11	KON	ZAC	22	27	0	39	75	PV	SI	R/C	Y	R/C	Y	1	N	Y	N	N		R/C	N	Y	N	N	N
7	Z26	R220	DA01		STRATA NAPATIA +-1.21	KON	ZAC	22	27	0	39	75	PV	SI	R/C	Y	R/C	Y	1	N	Y	N	N		R/C	N	Y	N	N	N
8	D26	R220	DA01		STRATA NAPATIA +-1.31	KON	ZAC	22	27	0	39	75	PV	SI	R/C	Y	R/C	Y	1	N	Y	N	N		R/C	N	Y	N	N	N
9	Z24	R220	DA01		NESUHLAS PREPIN.OCHR.A REGUL	KON	ZAC	22	27	0	39	75	PV	SI	R/C	Y	R/C	Y	2	N	Y	O	Y	2	R/C	N	Y	N	N	N
10	D24	R220	DA01		Q-JEDNOTKA NEZARADENA DO L1	KON	ZAC	22	27	0	39	75	PV	SI	R/C	N				N	Y	N	N		R/C	Y	N	N	N	N
11	Z22	R220	DA01		Q-JEDNOTKA NEZARADENA DO L2	KON	ZAC	22	27	0	39	75	PV	SI	R/C	N				N	Y	N	N		R/C	Y	N	N	N	N
12	D22	R220	DA01		Q-JEDNOTKA NEZARADENA DO L3	KON	ZAC	22	27	0	39	75	PV	SI	R/C	N				N	Y	N	N		R/C	Y	N	N	N	N
13	Z20	R220	T201	L1	PORUCHA VENTILATORA 1	KON	ZAC	22	27	0	39	75	PV	SI	R/C	N				N	Y	O	Y	1	R/C	Y	N	N	N	N
14	D20	R220	T201	L1	PORUCHA VENTILATORA 2	KON	ZAC	22	27	0	39	75	PV	SI	R/C	N				N	Y	O	Y	1	R/C	Y	N	N	N	N
15	Z18	R220	T201	L1	PORUCHA VENTILATORA 3	KON	ZAC	22	27	0	39	75	PV	SI	R/C	N				N	Y	O	Y	1	R/C	Y	N	N	N	N
16	D18	R220	T201	L1	PORUCHA VENTILATORA 4	KON	ZAC	22	27	0	39	75	PV	SI	R/C	N				N	Y	O	Y	1	R/C	Y	N	N	N	N
17	Z16	R220	T201	L1	PORUCHA CERPADLA 1	KON	ZAC	22	27	0	39	75	PV	SI	R/C	N				N	Y	O	Y	1	R/C	Y	N	N	N	N
18	D16	R220	T201	L1	PORUCHA CERPADLA 2	KON	ZAC	22	27	0	39	75	PV	SI	R/C	N				N	Y	O	Y	1	R/C	Y	N	N	N	N
19	Z14	R220	T201	L2	PORUCHA VENTILATORA 1	KON	ZAC	22	27	0	39	75	PV	SI	R/C	N				N	Y	O	Y	1	R/C	Y	N	N	N	N
20	D14	R220	T201	L2	PORUCHA VENTILATORA 2	KON	ZAC	22	27	0	39	75	PV	SI	R/C	N				N	Y	O	Y	1	R/C	Y	N	N	N	N
21	Z12	R220	T201	L2	PORUCHA VENTILATORA 3	KON	ZAC	22	27	0	39	75	PV	SI	R/C	N				N	Y	O	Y	1	R/C	Y	N	N	N	N
22	D12	R220	T201	L2	PORUCHA VENTILATORA 4	KON	ZAC	22	27	0	39	75	PV	SI	R/C	N				N	Y	O	Y	1	R/C	Y	N	N	N	N
23	Z10	R220	T201	L2	PORUCHA CERPADLA 1	KON	ZAC	22	27	0	39	75	PV	SI	R/C	N				N	Y	O	Y	1	R/C	Y	N	N	N	N
24	D10	R220	T201	L2	PORUCHA CERPADLA 2	KON	ZAC	22	27	0	39	75	PV	SI	R/C	N				N	Y	O	Y	1	R/C	Y	N	N	N	N
25	Z8	R220	T201	L3	PORUCHA VENTILATORA 1	KON	ZAC	22	27	0	39	75	PV	SI	R/C	N				N	Y	O	Y	1	R/C	Y	N	N	N	N
26	D8	R220	T201	L3	PORUCHA VENTILATORA 2	KON	ZAC	22	27	0	39	75	PV	SI	R/C	N				N	Y	O	Y	1	R/C	Y	N	N	N	N
27	Z6	R220	T201	L3	PORUCHA VENTILATORA 3	KON	ZAC	22	27	0	39	75	PV	SI	R/C	N				N	Y	O	Y	1	R/C	Y	N	N	N	N
28	D6	R220	T201	L3	PORUCHA VENTILATORA 4	KON	ZAC	22	27	0	39	75	PV	SI	R/C	N				N	Y	O	Y	1	R/C	Y	N	N	N	N
29	Z4	R220	T201	L3	PORUCHA CERPADLA 1	KON	ZAC	22	27	0	39	75	PV	SI	R/C	N				N	Y	O	Y	1	R/C	Y	N	N	N	N
30	D4	R220	T201	L3	PORUCHA CERPADLA 2	KON	ZAC	22	27	0	39	75	PV	SI	R/C	N				N	Y	O	Y	1	R/C	Y	N	N	N	N
31	Z2	R220	T201		BEH PARELELNEJ REGULACIE	KON	ZAC	22	27	0	39	75	PV	SI	R/C	N				N	Y	O	Y	2	R/C	Y	N	N	N	N
32	D2	R220	T201		BLOKOV. PARALEL. REGULACIE	KON	ZAC	22	27	0	39	75	PV	SI	R/C	N				N	Y	O	Y	2	R/C	Y	N	N	N	N

Proprietary data, company confidential. All rights reserved.
Confia a fine ds secret d'entreprise. Tous droits r.ysrv.s
Comunicado como segredo empresarial. Reservados todos os direitos.
Confiado como secreto industrial. Nos reservamos todos los derechos.
The reproduction, transmission or use of this document or its
is not permitted without express written authority.
Offenders will be liable for damages. All rights, including rights
created by patent grant or registration of a utility model or design, are reserved.

Documentation structur: Standard
Source file: KO050722.ODA

Rev.	Remarks	Date	Name	Norm
			Date	22.07.2005
			Drawn	LANG
			Appr.	

VSZ KOSICE

Orig./Repl. 1/Repl. by

SIEMENS AG
ISAOOLS

Substation control system 6MB
Digital input module:
Input assignment
Table

T = /BD 12
+
-S103
Page 12

Station: UW KOSICE
Device: D01 EAG
Module: DE01
Number: 1

Input	Connect designation	Command derivation	Indication derivation
1	Z32	Alarm 1 (Hupenbefehl)	
2	D32	Alarm 1 (Hupenbefehl)	
3	Z30	Alarm 1 (Hupenbefehl)	
4	D30	Alarm 1 (Hupenbefehl)	
5	Z28	Alarm 1 (Hupenbefehl)	
6	D28	Alarm 1 (Hupenbefehl)	
7	Z26	Alarm 1 (Hupenbefehl)	
8	D26	Alarm 1 (Hupenbefehl)	
9	Z24	Alarm 1 (Hupenbefehl)	
10	D24		VERTEILER TRAFOSTUFEN T201
11	Z22		VERTEILER TRAFOSTUFEN T201
12	D22		VERTEILER TRAFOSTUFEN T201
13	Z20		
14	D20		
15	Z18		
16	D18		
17	Z16		
18	D16		
19	Z14		
20	D14		
21	Z12		
22	D12		
23	Z10		
24	D10		
25	Z8		
26	D8		
27	Z6		
28	D6		
29	Z4		
30	D4		
31	Z2		
32	D2		

Proprietary data, company confidential. All rights reserved
Confia a tirre de secret d'entreprise. Tous droits reservs.
Comunicado como segredo empresarial. Reservados todos os direitos.
Confiado como secreto industrial. Nos reservamos todos los derechos.
The reproduction, transmission or use of this document or its contents is not permitted without express written authority. Offenders will be liable for damages. All rights, including rights created by patent grant or registration of a utility model or design, are reserved

Documentation structur: Standard
Source file: KO050722.ODA

				Date	22.07.2005
				Drawn	LANG
				Appr.	
F	Remarks	Date	Name	Norm	

VSZ
KOSICE

Orig./Repl. 1/Repl. by

SIEMENS AG
ISAOOLS

Substation control system 6MB
Digital input module:
Input assignment
Table

T = /BD 13
+
-S103
Page

Station: UW KOSICE
Device: D01 EAG
Module: DE02
Number: 2

Input	Connect designation	Section	Bay	Logical device	Lower limit	Value text	Column section	Column bay	Column logical device	Column information	Column value text	With command	Indication type	Entry in event list	Entry in alarm list	Acknowledge	Display in indication area	Indication class	Entry in SML	Display in diagram	Acknowledge	Archive	Operational indications	Protection indications	Filt. of raised & cleared	Bay blockage	Monitored as feedback	Checkback monit. time in s
1	Z32	R220	T201	L1 TRAFO	ODBOCKA ST.C.		22	27	0	38				O						Y	N	N				N	Y	20.0
2	D32	R220	T201	L1 TRAFO	ODBOCKA ST.C.		22	27	0	38				O						Y	N	N				N	Y	20.0
3	Z30	R220	T201	L1 TRAFO	ODBOCKA ST.C.		22	27	0	38				O						Y	N	N				N	Y	20.0
4	D30	R220	T201	L1 TRAFO	ODBOCKA ST.C.		22	27	0	38				O						Y	N	N				N	Y	20.0
5	Z28	R220	T201	L1 TRAFO	ODBOCKA ST.C.		22	27	0	38				O						Y	N	N				N	Y	20.0
6	D28	R220	T201	L1 TRAFO	ODBOCKA ST.C.		22	27	0	38				O						Y	N	N				N	Y	20.0
7	Z26	R220	T201	L1 TRAFO	ODBOCKA ST.C.		22	27	0	38				O						Y	N	N				N	Y	20.0
8	D26	R220	T201	L1 TRAFO	ODBOCKA ST.C.		22	27	0	38				O						Y	N	N				N	Y	20.0
9	Z24	R220	T201	L2 TRAFO	ODBOCKA ST.C.		22	27	0	38				O						Y	N	N				N	Y	20.0
10	D24	R220	T201	L2 TRAFO	ODBOCKA ST.C.		22	27	0	38				O						Y	N	N				N	Y	20.0
11	Z22	R220	T201	L2 TRAFO	ODBOCKA ST.C.		22	27	0	38				O						Y	N	N				N	Y	20.0
12	D22	R220	T201	L2 TRAFO	ODBOCKA ST.C.		22	27	0	38				O						Y	N	N				N	Y	20.0
13	Z20	R220	T201	L2 TRAFO	ODBOCKA ST.C.		22	27	0	38				O						Y	N	N				N	Y	20.0
14	D20	R220	T201	L2 TRAFO	ODBOCKA ST.C.		22	27	0	38				O						Y	N	N				N	Y	20.0
15	Z18	R220	T201	L2 TRAFO	ODBOCKA ST.C.		22	27	0	38				O						Y	N	N				N	Y	20.0
16	D18	R220	T201	L2 TRAFO	ODBOCKA ST.C.		22	27	0	38				O						Y	N	N				N	Y	20.0
17	Z16	R220	T201	L3 TRAFO	ODBOCKA ST.C.		22	27	0	38				O						Y	N	N				N	Y	20.0
18	D16	R220	T201	L3 TRAFO	ODBOCKA ST.C.		22	27	0	38				O						Y	N	N				N	Y	20.0
19	Z14	R220	T201	L3 TRAFO	ODBOCKA ST.C.		22	27	0	38				O						Y	N	N				N	Y	20.0
20	D14	R220	T201	L3 TRAFO	ODBOCKA ST.C.		22	27	0	38				O						Y	N	N				N	Y	20.0
21	Z12	R220	T201	L3 TRAFO	ODBOCKA ST.C.		22	27	0	38				O						Y	N	N				N	Y	20.0
22	D12	R220	T201	L3 TRAFO	ODBOCKA ST.C.		22	27	0	38				O						Y	N	N				N	Y	20.0
23	Z10	R220	T201	L3 TRAFO	ODBOCKA ST.C.		22	27	0	38				O						Y	N	N				N	Y	20.0
24	D10	R220	T201	L3 TRAFO	ODBOCKA ST.C.		22	27	0	38				O						Y	N	N				N	Y	20.0
25	Z8	R220	T201	L1	BUCHHOLZ NADOBA-VYSTR.1.ST.	KON ZAC	22	27	0	39	75	PV	SI	R/C	Y	R/C	Y	1	N	N		R/C	N	Y	N	N	N	
26	D8	R220	T201	L1	BUCHHOLZ NADOBA-VYSTR.2.ST.	KON ZAC	22	27	0	39	75	PV	SI	R/C	Y	R/C	Y	1	N	N		R/C	N	Y	N	N	N	
27	Z6	R220	T201	L1	NEBEZPEC.TEPLOTA-1.ST.	KON ZAC	22	27	0	39	75	PV	SI	R/C	Y	R/C	Y	1	N	N		R/C	N	Y	N	N	N	
28	D6	R220	T201	L1	NEBEZP.HLAD.OLEJ-NADOBA	KON ZAC	22	27	0	39	75	PV	SI	R/C	Y	R/C	Y	1	N	N		R/C	N	Y	N	N	N	
29	Z4	R220	T201	L1	NEBEZP.HLAD.OLEJ-REGULATOR	KON ZAC	22	27	0	39	75	PV	SI	R/C	Y	R/C	Y	1	N	N		R/C	N	Y	N	N	N	
30	D4	R220	T201	L1	NEBEZP.HLAD.OLEJ-PRIECHODKA	KON ZAC	22	27	0	39	75	PV	SI	R/C	Y	R/C	Y	1	N	N		R/C	N	Y	N	N	N	
31	Z2	R220	T201	L1	MAXIM. TLAK OLEJA	KON ZAC	22	27	0	39	75	PV	SI	R/C	Y	R/C	Y	1	N	N		R/C	N	Y	N	N	N	
32	D2	R220	T201	L1	MINIM. TLAK OLEJA	KON ZAC	22	27	0	39	75	PV	SI	R/C	Y	R/C	Y	1	N	N		R/C	N	Y	N	N	N	

Proprietary data, company confidential. All rights reserved.
Confia a tire de secret d'entreprise. Tous droits r,serv,s
Comunicado como segredo empresarial. Reservados todos os direitos
Confiado como secreto industrial. Nos reservamos todos los derechos
The reproduction, transmission or use of this document or its contents is not permitted without express written authority. Offenders will be liable for damages. All rights, including rights created by patent grant or registration of a utility model or design, are reserved

Documentation structure: Standard
Source file: KO050722.ODA

Rev.	Remarks	Date	Name	Norm	Date 22.07.2005	Drawn LANG	Appr.	Orig./Repl. 1/Repl. by

VSZ KOSICE

SIEMENS AG
ISAOOLS

Substation control system 6MB
Digital input module:
Input assignment
Table

T = /BD 14
+
-S103
Page 14

Station: UW KOSICE
Device: D01 EAG
Module: DE02
Number: 2

Input	Connect designation	Command derivation	Indication derivation	Remote transmission FP: Master station	Remote transmission FP: Name of telegram	Remote transmission FP: Name of info element
1	Z32		VERTEILER TRAFOSTUFEN T201	IEC 870-5-101	Meldungstelegramm Trafostufen	2000
2	D32		VERTEILER TRAFOSTUFEN T201	IEC 870-5-101	Meldungstelegramm Trafostufen	2000
3	Z30		VERTEILER TRAFOSTUFEN T201	IEC 870-5-101	Meldungstelegramm Trafostufen	2000
4	D30		VERTEILER TRAFOSTUFEN T201	IEC 870-5-101	Meldungstelegramm Trafostufen	2000
5	Z28		VERTEILER TRAFOSTUFEN T201	IEC 870-5-101	Meldungstelegramm Trafostufen	2000
6	D28		VERTEILER TRAFOSTUFEN T201	IEC 870-5-101	Meldungstelegramm Trafostufen	2000
7	Z26		VERTEILER TRAFOSTUFEN T201	IEC 870-5-101	Meldungstelegramm Trafostufen	2000
8	D26		VERTEILER TRAFOSTUFEN T201	IEC 870-5-101	Meldungstelegramm Trafostufen	2000
9	Z24		VERTEILER TRAFOSTUFEN T201	IEC 870-5-101	Meldungstelegramm Trafostufen	2001
10	D24		VERTEILER TRAFOSTUFEN T201	IEC 870-5-101	Meldungstelegramm Trafostufen	2001
11	Z22		VERTEILER TRAFOSTUFEN T201	IEC 870-5-101	Meldungstelegramm Trafostufen	2001
12	D22		VERTEILER TRAFOSTUFEN T201	IEC 870-5-101	Meldungstelegramm Trafostufen	2001
13	Z20		VERTEILER TRAFOSTUFEN T201	IEC 870-5-101	Meldungstelegramm Trafostufen	2001
14	D20		VERTEILER TRAFOSTUFEN T201	IEC 870-5-101	Meldungstelegramm Trafostufen	2001
15	Z18		VERTEILER TRAFOSTUFEN T201	IEC 870-5-101	Meldungstelegramm Trafostufen	2001
16	D18		VERTEILER TRAFOSTUFEN T201	IEC 870-5-101	Meldungstelegramm Trafostufen	2001
17	Z16		VERTEILER TRAFOSTUFEN T201	IEC 870-5-101	Meldungstelegramm Trafostufen	2002
18	D16		VERTEILER TRAFOSTUFEN T201	IEC 870-5-101	Meldungstelegramm Trafostufen	2002
19	Z14		VERTEILER TRAFOSTUFEN T201	IEC 870-5-101	Meldungstelegramm Trafostufen	2002
20	D14		VERTEILER TRAFOSTUFEN T201	IEC 870-5-101	Meldungstelegramm Trafostufen	2002
21	Z12		VERTEILER TRAFOSTUFEN T201	IEC 870-5-101	Meldungstelegramm Trafostufen	2002
22	D12		VERTEILER TRAFOSTUFEN T201	IEC 870-5-101	Meldungstelegramm Trafostufen	2002
23	Z10		VERTEILER TRAFOSTUFEN T201	IEC 870-5-101	Meldungstelegramm Trafostufen	2002
24	D10		VERTEILER TRAFOSTUFEN T201	IEC 870-5-101	Meldungstelegramm Trafostufen	2002
25	Z8	Alarm 1 (Hupenbefehl)				
26	D8	Alarm 1 (Hupenbefehl)				
27	Z6	Alarm 1 (Hupenbefehl)				
28	D6	Alarm 1 (Hupenbefehl)				
29	Z4	Alarm 1 (Hupenbefehl)				
30	D4	Alarm 1 (Hupenbefehl)				
31	Z2	Alarm 1 (Hupenbefehl)				
32	D2	Alarm 1 (Hupenbefehl)				

Proprietary data, company confidential. All rights reserved.
Confie a titre de secret d'entreprise. Tous droits reservés.
Comunicado como segredo empresarial. Reservados todos os direitos.
Confiado como secreto industrial. Nos reservamos todos los derechos.
The reproduction, transmission or use of this document or its is not permitted without expres written authority.
Offenders will be liable for damages. All rights, including rights created by patent grant or registration of a utility model or design, are reserved.

Documentation structur: Standard
Source file: KO050722.ODA

			Date	22.07.2005	VSZ KOSICE
			Drawn	LANG	
			Appr.		
R	Remarks	Date	Name	Norm	Orig./Repl. 1/Repl. by

SIEMENS AG
ISA TOOLS

Substation control system 6MB
Digital input module:
Input assignment
Table

T = /BD 15
+
-S103
Page

Station: UW KOSICE
Device: D01 EAG
Module: DE02
Number: 2

Input	Connect designation	Section	Bay	Logical device	Lower limit	Bit pattern length	Tap position coding	Number of tap positions	Tap jump for tap com.	Filtering of norm. setting	With tap changer
1	Z32	R220	T201	L1 TRAFO	ODBOCKA ST.C.	)8 bits	No standard code	19	1	N	Y
2	D32	R220	T201	L1 TRAFO	ODBOCKA ST.C.	)8 bits	No standard code	19	1	N	Y
3	Z30	R220	T201	L1 TRAFO	ODBOCKA ST.C.	)8 bits	No standard code	19	1	N	Y
4	D30	R220	T201	L1 TRAFO	ODBOCKA ST.C.	)8 bits	No standard code	19	1	N	Y
5	Z28	R220	T201	L1 TRAFO	ODBOCKA ST.C.	)8 bits	No standard code	19	1	N	Y
6	D28	R220	T201	L1 TRAFO	ODBOCKA ST.C.	)8 bits	No standard code	19	1	N	Y
7	Z26	R220	T201	L1 TRAFO	ODBOCKA ST.C.	)8 bits	No standard code	19	1	N	Y
8	D26	R220	T201	L1 TRAFO	ODBOCKA ST.C.	)8 bits	No standard code	19	1	N	Y
9	Z24	R220	T201	L2 TRAFO	ODBOCKA ST.C.	)8 bits	No standard code	19	1	N	Y
10	D24	R220	T201	L2 TRAFO	ODBOCKA ST.C.	)8 bits	No standard code	19	1	N	Y
11	Z22	R220	T201	L2 TRAFO	ODBOCKA ST.C.	)8 bits	No standard code	19	1	N	Y
12	D22	R220	T201	L2 TRAFO	ODBOCKA ST.C.	)8 bits	No standard code	19	1	N	Y
13	Z20	R220	T201	L2 TRAFO	ODBOCKA ST.C.	)8 bits	No standard code	19	1	N	Y
14	D20	R220	T201	L2 TRAFO	ODBOCKA ST.C.	)8 bits	No standard code	19	1	N	Y
15	Z18	R220	T201	L2 TRAFO	ODBOCKA ST.C.	)8 bits	No standard code	19	1	N	Y
16	D18	R220	T201	L2 TRAFO	ODBOCKA ST.C.	)8 bits	No standard code	19	1	N	Y
17	Z16	R220	T201	L3 TRAFO	ODBOCKA ST.C.	)8 bits	No standard code	19	1	N	Y
18	D16	R220	T201	L3 TRAFO	ODBOCKA ST.C.	)8 bits	No standard code	19	1	N	Y
19	Z14	R220	T201	L3 TRAFO	ODBOCKA ST.C.	)8 bits	No standard code	19	1	N	Y
20	D14	R220	T201	L3 TRAFO	ODBOCKA ST.C.	)8 bits	No standard code	19	1	N	Y
21	Z12	R220	T201	L3 TRAFO	ODBOCKA ST.C.	)8 bits	No standard code	19	1	N	Y
22	D12	R220	T201	L3 TRAFO	ODBOCKA ST.C.	)8 bits	No standard code	19	1	N	Y
23	Z10	R220	T201	L3 TRAFO	ODBOCKA ST.C.	)8 bits	No standard code	19	1	N	Y
24	D10	R220	T201	L3 TRAFO	ODBOCKA ST.C.	)8 bits	No standard code	19	1	N	Y

Proprietary data, company confidential. All rights reserved
Confie a titre de secret d'entreprise. Tous droits réservés.
Comunicado como segredo empresarial. Reservados todos os direitos.
Confiado como secreto industrial. Nos reservamos todos los derechos.
The reproduction, transmission or use of this document or its is not permitted without express written authority.
Offenders will be liable for damages. All rights, including rights created by patent grant or registration of a utility model or design, are reserved

Documentation structur: Standard
Source file: KO050722.ODA

Rev.	Remarks	Date	Name	Date	22.07.2005
				Drawn	LANG
				Appr.	
				Norm	

VSZ
KOSICE

Orig./Repl. 1/Repl. by

SIEMENS AG
ISA TOOLS

Substation control system 6MB
Digital input module:
Additional information for tap positions
Table

T = /BD 16
+
-S103
Page 16

Proprietary data, company confidential. All rights reserved.
Confia a ltre da secret d'entreprise. Tous droits reservs.
Comunicado como segredo empresarial. Reservados todos os direitos.
Confiado como secreto industrial. Nos reservamos todos los derechos.
The reproduction, transmission or use of this document or its contents is not permitted without express written authority. Offenders will be liable for damages. All rights, including rights created by patent grant or registration of a utility model or design, are reserved.

Station: UW KOSICE
Device: D01 EAG
Module: DE03
Number: 3

Input	Connect designation	Section	Bay	Logical device	Lower limit	Value text	Column section	Column bay	Column logical device	Column information	Column value text	With command	Indication type	Entry in event list	Entry in alarm list	Acknowledge	Display in indication area	Indication class	Entry in SML	Display in diagram	Acknowledge	Display under voltage level	Archive	Operational indications	Protection indications	Filt. of raised & cleared	Bay blockage	Monitored as feedback
1	Z32	R220	T201	L2	BUCHHOLZ NADOBA-VYSTR.1.ST.	KON ZAC	22	27	0	39	75	PV	SI	R/C	Y	R/C	Y	1	N	N			R/C	N	Y	N	N	N
2	D32	R220	T201	L2	BUCHHOLZ NADOBA-VYSTR.2.ST.	KON ZAC	22	27	0	39	75	PV	SI	R/C	Y	R/C	Y	1	N	N			R/C	N	Y	N	N	N
3	Z30	R220	T201	L2	NEBEZPEC.TEPLOTA-1.ST.	KON ZAC	22	27	0	39	75	PV	SI	R/C	Y	R/C	Y	1	N	N			R/C	N	Y	N	N	N
4	D30	R220	T201	L2	NEBEZP.HLAD.OLEJ-NADOBA	KON ZAC	22	27	0	39	75	PV	SI	R/C	Y	R/C	Y	1	N	N			R/C	N	Y	N	N	N
5	Z28	R220	T201	L2	NEBEZP.HLAD.OLEJ-REGULATOR	KON ZAC	22	27	0	39	75	PV	SI	R/C	Y	R/C	Y	1	N	N			R/C	N	Y	N	N	N
6	D28	R220	T201	L2	NEBEZP.HLAD.OLEJ-PRIECHODKA	KON ZAC	22	27	0	39	75	PV	SI	R/C	Y	R/C	Y	1	N	N			R/C	N	Y	N	N	N
7	Z26	R220	T201	L2	MAXIM. TLAK OLEJA	KON ZAC	22	27	0	39	75	PV	SI	R/C	Y	R/C	Y	1	N	N			R/C	N	Y	N	N	N
8	D26	R220	T201	L2	MINIM. TLAK OLEJA	KON ZAC	22	27	0	39	75	PV	SI	R/C	Y	R/C	Y	1	N	N			R/C	N	Y	N	N	N
9	Z24	R220	T201	L3	BUCHHOLZ NADOBA-VYSTR.1.ST.	KON ZAC	22	27	0	39	75	PV	SI	R/C	Y	R/C	Y	1	N	N			R/C	N	Y	N	N	N
10	D24	R220	T201	L3	BUCHHOLZ NADOBA-VYSTR.2.ST.	KON ZAC	22	27	0	39	75	PV	SI	R/C	Y	R/C	Y	1	N	N			R/C	N	Y	N	N	N
11	Z22	R220	T201	L3	NEBEZPEC.TEPLOTA-1.ST.	KON ZAC	22	27	0	39	75	PV	SI	R/C	Y	R/C	Y	1	N	N			R/C	N	Y	N	N	N
12	D22	R220	T201	L3	NEBEZP.HLAD.OLEJ-NADOBA	KON ZAC	22	27	0	39	75	PV	SI	R/C	Y	R/C	Y	1	N	N			R/C	N	Y	N	N	N
13	Z20	R220	T201	L3	NEBEZP.HLAD.OLEJ-REGULATOR	KON ZAC	22	27	0	39	75	PV	SI	R/C	Y	R/C	Y	1	N	N			R/C	N	Y	N	N	N
14	D20	R220	T201	L3	NEBEZP.HLAD.OLEJ-PRIECHODKA	KON ZAC	22	27	0	39	75	PV	SI	R/C	Y	R/C	Y	1	N	N			R/C	N	Y	N	N	N
15	Z18	R220	T201	L3	MAXIM. TLAK OLEJA	KON ZAC	22	27	0	39	75	PV	SI	R/C	Y	R/C	Y	1	N	N			R/C	N	Y	N	N	N
16	D18	R220	T201	L3	MINIM. TLAK OLEJA	KON ZAC	22	27	0	39	75	PV	SI	R/C	Y	R/C	Y	1	N	N			R/C	N	Y	N	N	N
17	Z16	R220	T201	L1	BUCHHOLZ REGULATOR-VYPNUTIE	KON ZAC	22	27	0	39	75	PV	TR	O	Y	O	Y	1	N	N			R	N	Y		N	N
18	D16	R220	T201	L2	BUCHHOLZ REGULATOR-VYPNUTIE	KON ZAC	22	27	0	39	75	PV	TR	O	Y	O	Y	1	N	N			R	N	Y		N	N
19	Z14	R220	T201	L3	BUCHHOLZ REGULATOR-VYPNUTIE	KON ZAC	22	27	0	39	75	PV	TR	O	Y	O	Y	1	N	N			R	N	Y		N	N
20	D14	R220	T201	L1	BUCHHOLZ NADOBA-VYPNUTIE	KON ZAC	22	27	0	39	75	PV	TR	O	Y	O	Y	1	N	N			R	N	Y		N	N
21	Z12	R220	T201	L2	BUCHHOLZ NADOBA-VYPNUTIE	KON ZAC	22	27	0	39	75	PV	TR	O	Y	O	Y	1	N	N			R	N	Y		N	N
22	D12	R220	T201	L3	BUCHHOLZ NADOBA-VYPNUTIE	KON ZAC	22	27	0	39	75	PV	TR	O	Y	O	Y	1	N	N			R	N	Y		N	N
23	Z10	R220	T201	L1	NEBEZPEC.TEPLOTA-2.ST.	KON ZAC	22	27	0	39	75	PV	SI	R/C	Y	R/C	Y	1	N	N			R/C	N	Y	N	N	N
24	D10	R220	T201	L2	NEBEZPEC.TEPLOTA-2.ST.	KON ZAC	22	27	0	39	75	PV	SI	R/C	Y	R/C	Y	1	N	N			R/C	N	Y	N	N	N
25	Z8	R220	T201	L3	NEBEZPEC.TEPLOTA-2.ST.	KON ZAC	22	27	0	39	75	PV	SI	R/C	Y	R/C	Y	1	N	N			R/C	N	Y	N	N	N
26	D8	R220	T201	L1	BEH REGULACIE VO FAZE L1	KON ZAC	22	27	0	39	75	PV	SI	R/C	N				N	Y	N	N	R/C	Y	N	N	N	N
27	Z6	R220	T201	L2	BEH REGULACIE VO FAZE L2	KON ZAC	22	27	0	39	75	PV	SI	R/C	N				N	Y	N	N	R/C	Y	N	N	N	N
28	D6	R220	T201	L3	BEH REGULACIE VO FAZE L3	KON ZAC	22	27	0	39	75	PV	SI	R/C	N				N	Y	N	N	R/C	Y	N	N	N	N
29	Z4																											
30	D4																											
31	Z2																											
32	D2																											

Documentation structure: Standard
Source file: KO050722.ODA

Date	22.07.2005	VSZ KOSICE	SIEMENS AG ISAOOLS
Drawn	LANG		
Appr.			
Norm		Orig./Repl. 1/Repl. by	

Substation control system 6MB
Digital input module:
Input assignment
Table

T = /BD 17
+
-S103
Page

R Remarks Date Name

Station: UW KOSICE
Device: D01 EAG
Module: DE03
Number: 3

Input	Connect designation	Command derivation
1	Z32	Alarm 1 (Hupenbefehl)
2	D32	Alarm 1 (Hupenbefehl)
3	Z30	Alarm 1 (Hupenbefehl)
4	D30	Alarm 1 (Hupenbefehl)
5	Z28	Alarm 1 (Hupenbefehl)
6	D28	Alarm 1 (Hupenbefehl)
7	Z26	Alarm 1 (Hupenbefehl)
8	D26	Alarm 1 (Hupenbefehl)
9	Z24	Alarm 1 (Hupenbefehl)
10	D24	Alarm 1 (Hupenbefehl)
11	Z22	Alarm 1 (Hupenbefehl)
12	D22	Alarm 1 (Hupenbefehl)
13	Z20	Alarm 1 (Hupenbefehl)
14	D20	Alarm 1 (Hupenbefehl)
15	Z18	Alarm 1 (Hupenbefehl)
16	D18	Alarm 1 (Hupenbefehl)
17	Z16	Alarm 1 (Hupenbefehl)
18	D16	Alarm 1 (Hupenbefehl)
19	Z14	Alarm 1 (Hupenbefehl)
20	D14	Alarm 1 (Hupenbefehl)
21	Z12	Alarm 1 (Hupenbefehl)
22	D12	Alarm 1 (Hupenbefehl)
23	Z10	Alarm 1 (Hupenbefehl)
24	D10	Alarm 1 (Hupenbefehl)
25	Z8	Alarm 1 (Hupenbefehl)
26	D8	
27	Z6	
28	D6	
29	Z4	
30	D4	
31	Z2	
32	D2	

Proprietary data, company confidential. All rights reserved
Confie a titre de secret d'entreprise. Tous droits réservés.
Comunicado como segredo empresarial. Reservados todos os direitos.
Confiado como secreto industrial. Nos reservamos todos los derechos.

The reproduction, transmission or use of this document or its is not permitted without express written authority. Offenders will be liable for damages. All rights, including rights created by patent grant or registration of a utility model or design, are reserved.

Documentation structur: Standard
Source file: KO050722.ODA

Rev.	Remarks	Date	Name	Date	22.07.2005	VSZ KOSICE	SIEMENS AG ISA TOOLS	Substation control system 6MB
				Drawn	LANG			Digital input module:
				Appr.				Input assignment
				Norm		Orig./Repl. 1/Repl. by		Table

T = /BD 18
+
-S103
Page 18

Station: UW KOSICE
Device: D01 EAG
Module: DE04
Number: 4

Input	Connect designation	Section	Bay	Logical device	Lower limit	Value text		Column section	Column bay	Column logical device	Column information	Column value text	With command	Indication type	Entry in event list	Entry in alarm list	Acknowledge	Display in indication area	Indication class	Entry in SML	Display in diagram	Acknowledge	Display under voltage level	Indication class	Archive	Operational indications	Protection indications	Filt. of raised & cleared	Bay blockage
1	Z32	R220	TR.	Q	BUCHHOLZ REGULATOR-VYPNUTIE	KON	ZAC	22	27	0	39	75	PV	TR	O	Y	O	Y	1	N	N				R	N	Y		N
2	D32	R220	TR.	Q	BUCHHOLZ NADOBA-VYPNUTIE	KON	ZAC	22	27	0	39	75	PV	TR	O	Y	O	Y	1	N	N				R	N	Y		N
3	Z30	R220	TR.	Q	NEBEZPEC.TEPLOTA-2.ST.	KON	ZAC	22	27	0	39	75	PV	SI	R/C	Y	R/C	Y	1	N	N				R/C	N	Y	N	N
4	D30	R220	TR.	Q	BUCHHOLZ NADOBA-VYSTR.1.ST.	KON	ZAC	22	27	0	39	75	PV	SI	R/C	Y	R/C	Y	1	N	N				R/C	N	Y	N	N
5	Z28	R220	TR.	Q	BUCHHOLZ NADOBA-VYSTR.2.ST.	KON	ZAC	22	27	0	39	75	PV	SI	R/C	Y	R/C	Y	1	N	N				R/C	N	Y	N	N
6	D28																												
7	Z26	R220	TR.	Q	NEBEZPEC.TEPLOTA-1.ST.	KON	ZAC	22	27	0	39	75	PV	SI	R/C	Y	R/C	Y	1	N	N				R/C	N	Y	N	N
8	D26	R220	TR.	Q	NEBEZP.HLAD.OLEJ-NADOBA	KON	ZAC	22	27	0	39	75	PV	SI	R/C	Y	R/C	Y	1	N	N				R/C	N	Y	N	N
9	Z24	R220	TR.	Q	NEBEZP.HLAD.OLEJ-REGULATOR	KON	ZAC	22	27	0	39	75	PV	SI	R/C	Y	R/C	Y	1	N	N				R/C	N	Y	N	N
10	D24	R220	TR.	Q	NEBEZP.HLAD.OLEJ-PRIECHODKA	KON	ZAC	22	27	0	39	75	PV	SI	R/C	Y	R/C	Y	1	N	N				R/C	N	Y	N	N
11	Z22	R220	TR.	Q	MAXIM. TLAK OLEJA	KON	ZAC	22	27	0	39	75	PV	SI	R/C	Y	R/C	Y	1	N	N				R/C	N	Y	N	N
12	D22	R220	TR.	Q	MINIM. TLAK OLEJA	KON	ZAC	22	27	0	39	75	PV	SI	R/C	Y	R/C	Y	1	N	N				R/C	N	Y	N	N
13	Z20	R220	TR.	Q	PORUCHA VENTILATORA 1	KON	ZAC	22	27	0	39	75	PV	SI	R/C	N				N	Y	O	Y	1	R/C	Y	N	N	N
14	D20	R220	TR.	Q	PORUCHA VENTILATORA 2	KON	ZAC	22	27	0	39	75	PV	SI	R/C	N				N	Y	O	Y	1	R/C	Y	N	N	N
15	Z18	R220	TR.	Q	PORUCHA VENTILATORA 3	KON	ZAC	22	27	0	39	75	PV	SI	R/C	N				N	Y	O	Y	1	R/C	Y	N	N	N
16	D18	R220	TR.	Q	PORUCHA VENTILATORA 4	KON	ZAC	22	27	0	39	75	PV	SI	R/C	N				N	Y	O	Y	1	R/C	Y	N	N	N
17	Z16	R220	TR.	Q	PORUCHA CERPADLA 1	KON	ZAC	22	27	0	39	75	PV	SI	R/C	N				N	Y	O	Y	1	R/C	Y	N	N	N
18	D16	R220	TR.	Q	PORUCHA CERPADLA 2	KON	ZAC	22	27	0	39	75	PV	SI	R/C	N				N	Y	O	Y	1	R/C	Y	N	N	N
19	Z14																												
20	D14	R220	TR.	Q	BEH REGULACIE V REZERV.JEDN.	KON	ZAC	22	27	0	39	75	PV	SI	R/C	N				N	Y	N	N		R/C	Y	N	N	N
21	Z12																												
22	D12																												
23	Z10																												
24	D10																												
25	Z8	R220	TR.	Q	TRAFO ODBOCKA ST.C.			22	27	0	38				O						Y	N			N				N
26	D8	R220	TR.	Q	TRAFO ODBOCKA ST.C.			22	27	0	38				O						Y	N			N				N
27	Z6	R220	TR.	Q	TRAFO ODBOCKA ST.C.			22	27	0	38				O						Y	N			N				N
28	D6	R220	TR.	Q	TRAFO ODBOCKA ST.C.			22	27	0	38				O						Y	N			N				N
29	Z4	R220	TR.	Q	TRAFO ODBOCKA ST.C.			22	27	0	38				O						Y	N			N				N
30	D4	R220	TR.	Q	TRAFO ODBOCKA ST.C.			22	27	0	38				O						Y	N			N				N
31	Z2	R220	TR.	Q	TRAFO ODBOCKA ST.C.			22	27	0	38				O						Y	N			N				N
32	D2	R220	TR.	Q	TRAFO ODBOCKA ST.C.			22	27	0	38				O						Y	N			N				N

Proprietary data, company confidential. All rights reserved
Confia a tire de secret de l'entreprise. Tous droits r.serv.s
Comunicado como segredo empresarial. Reservados todos os direitos.
Confiado como secreto industrial. Nos reservamos todos los derechos.
The reproduction, transmission or use of this document or its contents is not permitted without express written authority. Offenders will be liable for damages. All rights, including rights created by patent grant or registration of a utility model or design, are reserved.

Documentation structur: Standard
Source file: KO050722.ODA

Date 22.07.2005
Drawn LANG
Appr.
Norm
Remarks | Date | Name | Orig./Repl. 1/Repl. by

VSZ KOSICE

SIEMENS AG
ISATOOLS

Substation control system 6MB
Digital input module:
Input assignment
Table

T = /BD 19
+
-S103
Page

Station: UW KOSICE
Device: D01 EAG
Module: DE04
Number: 4

Input	Connect designation	Monitored as feedback	Checkback monit. time in s	Command derivation	Indication derivation	Remote transmission FP: Master station	Remote transmission FP: Name of telegram	Remote transmission FP: Name of info element
1	Z32	N		Alarm 1 (Hupenbefehl)				
2	D32	N		Alarm 1 (Hupenbefehl)				
3	Z30	N		Alarm 1 (Hupenbefehl)				
4	D30	N		Alarm 1 (Hupenbefehl)				
5	Z28	N		Alarm 1 (Hupenbefehl)				
6	D28							
7	Z26	N		Alarm 1 (Hupenbefehl)				
8	D26	N		Alarm 1 (Hupenbefehl)				
9	Z24	N		Alarm 1 (Hupenbefehl)				
10	D24	N		Alarm 1 (Hupenbefehl)				
11	Z22	N		Alarm 1 (Hupenbefehl)				
12	D22	N		Alarm 1 (Hupenbefehl)				
13	Z20	N						
14	D20	N						
15	Z18	N						
16	D18	N						
17	Z16	N						
18	D16	N						
19	Z14							
20	D14	N						
21	Z12							
22	D12							
23	Z10							
24	D10							
25	Z8	Y	20.0		VERTEILER TRAFOSTUFEN T201	IEC 870-5-101	Meldungstelegramm Trafostufen	2003
26	D8	Y	20.0		VERTEILER TRAFOSTUFEN T201	IEC 870-5-101	Meldungstelegramm Trafostufen	2003
27	Z6	Y	20.0		VERTEILER TRAFOSTUFEN T201	IEC 870-5-101	Meldungstelegramm Trafostufen	2003
28	D6	Y	20.0		VERTEILER TRAFOSTUFEN T201	IEC 870-5-101	Meldungstelegramm Trafostufen	2003
29	Z4	Y	20.0		VERTEILER TRAFOSTUFEN T201	IEC 870-5-101	Meldungstelegramm Trafostufen	2003
30	D4	Y	20.0		VERTEILER TRAFOSTUFEN T201	IEC 870-5-101	Meldungstelegramm Trafostufen	2003
31	Z2	Y	20.0		VERTEILER TRAFOSTUFEN T201	IEC 870-5-101	Meldungstelegramm Trafostufen	2003
32	D2	Y	20.0		VERTEILER TRAFOSTUFEN T201	IEC 870-5-101	Meldungstelegramm Trafostufen	2003

Proprietary data, company confidential. All rights reserved.
Confie a titre de secret d'entreprise. Tous droits reservés.
Comunicado como segredo empresarial. Reservados todos os direitos.
Confiado como secreto industrial. Nos reservamos todos los derechos.
The reproduction, transmission or use of this document or its is not permitted without express written authority.
Offenders will be liable for damages. All rights, including rights created by patent grant or registration of a utility model or design, are reserved.

Documentation structur: Standard
Source file: KO050722.ODA

Rev.	Remarks	Date	Name	Date	22.07.2005	VSZ KOSICE	SIEMENS AG ISAOOLS	Substation control system 6MB
				Drawn	LANG			Digital input module:
				Appr.				Input assignment
				Norm		Orig./Repl. 1/Repl. by		Table

T = /BD 20
+
-S103
Page 20

Station: UW KOSICE
Device: D01 EAG
Module: DE04
Number: 4

Input	Connect designation	Section	Bay	Logical device	Lower limit	Bit pattern length	Tap position coding	Number of tap positions	Tap jump for tap com.	Filtering of norm. setting	With tap changer
25	Z8	R220	TR.	Q TRAFO	ODBOCKA ST.C.	)8 bits	No standard code	19	1	N	Y
26	D8	R220	TR.	Q TRAFO	ODBOCKA ST.C.	)8 bits	No standard code	19	1	N	Y
27	Z6	R220	TR.	Q TRAFO	ODBOCKA ST.C.	)8 bits	No standard code	19	1	N	Y
28	D6	R220	TR.	Q TRAFO	ODBOCKA ST.C.	)8 bits	No standard code	19	1	N	Y
29	Z4	R220	TR.	Q TRAFO	ODBOCKA ST.C.	)8 bits	No standard code	19	1	N	Y
30	D4	R220	TR.	Q TRAFO	ODBOCKA ST.C.	)8 bits	No standard code	19	1	N	Y
31	Z2	R220	TR.	Q TRAFO	ODBOCKA ST.C.	)8 bits	No standard code	19	1	N	Y
32	D2	R220	TR.	Q TRAFO	ODBOCKA ST.C.	)8 bits	No standard code	19	1	N	Y

Proprietary data, company confidential. All rights reserved.
Confie a titre de secret d'entreprise. Tous droits r.serv.s.
Comunicado como segredo empresarial. Reservados todos os direitos.
Confiado como secreto industrial. Nos reservamos todos los derechos.

The reproduction, transmission or use of this document or its is not permitted without express written authority.
Offenders will be liable for damages. All rights, including rights created by patent grant or registration of a utility model or design, are reserved.

Documentation structur: Standard
Source file: KO050722.ODA

			Date	22.07.2005	VSZ KOSICE	SIEMENS AG ISA TOOLS	Substation control system 6MB
			Drawn	LANG			Digital input module:
			Appr.				Additional information for tap positic
F	Remarks	Date	Name	Norm	Orig./Repl. 1/Repl. by		Table

T = /BD 21
+
-S103
Page

Device: D01 EAG
Module: LT
Packet no.: 8
Version no.: 1

Connect. with:

Device	Subrack	Module	Connection SKA:	UART	Multiplexer
LZG	LZG-BGT	AST 2	D16/6	2	14

Proprietary data, company confidential. All rights reserved.
Confie a titre de secret d'entreprise. Tous droits reservs.
Comunicado como segredo empresarial. Reservados todos os direitos.
Confiado como secreto industrial. Nos reservamos todos los derechos.

The reproduction, transmission or use of this document or its is not permitted without expres written authority.
Offenders will be liable for damages. All rights, including rights created by patent grant or registration of a utility model or design, are reserved

Documentation structur: Standard
Source file: KO050722.ODA

Rev.	Remarks	Date	Name	Date	22.07.2005	VSZ KOSICE	SIEMENS AG ISAOOLS	Substation control system 6MB Processor module for control	T = /BD 22
				Drawn	LANG				+
				Appr.					-S103 Page 22
				Norm		Orig./Repl. 1/Repl. by		Table	

Station: UW KOSICE
Device: D02 EAG
Module: AE01
Number: 1

Analog channel no.	Connect designation	Section	Bay	Logical device	Lower limit	Analog range	Display value	Dimension	Zero suppression f. display in %	Bay blockage	Thres val. for switchover in %	Process analog value in I/O uni	Knee point: Acquisition value in mA	Knee point: Display value	With live-zero monitoring	Display in diagram
1	Z32/D32	R220	T202	MESSW. SPANNUNG	NAPATIE L1-L2	20 mA	220.00	KV	10.0	N	0.0	N			PV	Y
2	Z30/D30	R220	T202	MESSW. SPANNUNG	NAPATIE L1-L3	20 mA	220.00	KV	10.0	N	0.0	N			PV	Y
3	Z28/D28	R220	T202	MESSW. SPANNUNG	NAPATIE L2-L3	20 mA	220.00	KV	10.0	N	0.0	N			PV	Y
4	Z26/D26	R220	T202		COS FI	20 mA	1.00	GRAD	PV	N	0.0	N	0.00	-1.00	PV	Y
5	Z24/D24	R220	T202		CINNY VYKON	20 mA	228.63	MW	1.0	N	0.0	N			PV	Y
6	Z22/D22	R220	T202		JALOVY VYKON	20 mA	228.63	MW	1.0	N	0.0	N			PV	Y
7	Z20/D20	R220	T202	MESSWERTE STROM	PRUD L1	20 mA	600.00	A	1.0	N	0.0	N			PV	Y
8	Z18/D18	R220	T202	MESSWERTE STROM	PRUD L2	20 mA	600.00	A	1.0	N	0.0	N			PV	Y
9	Z16/D16	R220	T202	MESSWERTE STROM	PRUD L3	20 mA	600.00	A	1.0	N	0.0	N			PV	Y
10	Z14/D14	R220	T202	MESSW. SPANNUNG DA02	NAPATIE L1-L2	20 mA	220.00	KV	10.0	N	0.0	N			PV	Y
11	Z12/D12	R220	T202	MESSW. SPANNUNG DA02	NAPATIE L1-L3	20 mA	220.00	KV	10.0	N	0.0	N			PV	N
12	Z10/D10	R220	T202	MESSW. SPANNUNG DA02	NAPATIE L2-L3	20 mA	220.00	KV	10.0	N	0.0	N			PV	N
13	Z8/D8	R220	T202		FREKVENCIA	20 mA	55.00	Hz	PV	N	0.0	N	0.00	45.00	PV	Y
14	Z6/D6					20 mA									PV	
15	Z4/D4					20 mA									PV	
16	Z2/D2					20 mA									PV	

Proprietary data, company confidential. All rights reserved.
Confiaa tire de secret dentreprise. Tous droits rseervs.
Comunicado como segredo empresarial. Reservados todos os direitos.
Confiado como secreto industrial. Nos reservamos todos los derechos.
The reproduction, transmission or use of this document or its contents is not permitted without express written authority. Offenders will be liable for damages. All rights, including rights created by patent grant or registration of a utility model or design, are reserved.

Documentation structur: Standard
Source file: KO050722.ODA

Date	22.07.2005	VSZ KOSICE	SIEMENS AG ISAOOLS
Drawn	LANG		
Appr.			
Norm		Orig./Repl. 1/Repl. by	

Substation control system 6MB
Analog input module:
Analog values
Table

T = /BD 23
+
-S103
Page

Remarks | Date | Name

Station: UW KOSICE
Device: D02 EAG
Module: AE01
Number: 1

Analog channel no.	Connect designation	Archive	Analog recording	Recording mode	No. of val. to be averaged	Scan interval in s	Analog value type	Max. value of analog value	Keep non-return pointer	Calculated demand value	Derive percentage value
1	Z32/D32	Y	PERM	Analog value direct		900	PPV	264.00	PV	PV	PV
2	Z30/D30	Y	PERM	Analog value direct		900	PPV	264.00	PV	PV	PV
3	Z28/D28	Y	PERM	Analog value direct		900	PPV	264.00	PV	PV	PV
4	Z26/D26	Y	PERM	Analog value direct		900	PF	1.00	PV	PV	PV
5	Z24/D24	Y	PERM	Analog value direct		900	AP	274.40	PV	PV	PV
6	Z22/D22	Y	PERM	Analog value direct		900	RP	274.40	PV	PV	PV
7	Z20/D20	Y	PERM	Analog value direct		900	CUR	720.00	PV	PV	PV
8	Z18/D18	Y	PERM	Analog value direct		900	CUR	720.00	PV	PV	PV
9	Z16/D16	Y	PERM	Analog value direct		900	CUR	720.00	PV	PV	PV
10	Z14/D14	Y	PERM	Analog value direct		900	PPV	264.00	PV	PV	PV
11	Z12/D12	Y	PERM	Analog value direct		900	PPV	264.00	PV	PV	PV
12	Z10/D10	Y	PERM	Analog value direct		900	PPV	264.00	PV	PV	PV
13	Z8/D8	Y	PERM	Analog value direct		900	F	55.00	PV	PV	PV
14	Z6/D6										
15	Z4/D4										
16	Z2/D2										

Proprietary data, company confidential. All rights reserved.
Confiaa tfne de secret dentreprise. Tous droits rsesrvs
Comunicado como segredo empresarial. Reservados todos os direitos.
Confiado como secreto industrial. Nos reservamos todos los derechos.
The reproduction, transmission or use of this document or its
is not permitted without expres written authority.
Offenders will be liable for damages. All rights, including rights
created by patent grant or registration of a utility model or design, are reserved.

Documentation structur: Standard
Source file: KO050722.ODA

Rev.	Remarks	Date	Name	Norm

Date 22.07.2005
Drawn LANG
Appr.

VSZ KOSICE

Orig./Repl. 1/Repl. by

SIEMENS AG
ISAOOLS

Substation control system 6MB
Analog input module:
Analog values
Table

T = /BD 24
+
-S103
Page 24

Station: UW KOSICE
Device: D02 EAG
Module: AE01
Number: 1

Analog channel no.	Connect designation	Static limit monitoring: Filtering time in s	Lower limit 1	Indication at lower limit 1	Lower limit 2	Indication at lower limit 2	Upper limit 1	Indication at higher limit 1	Upper limit 2	Indication at higher limit 2	Teletrans. FP raw val. Master station	Name of telegram	Name of info element
1	Z32/D32	0	198.00	NAPATIE L1-L2 DH1	154.00	NAPATIE L1-L2 DH2	245.00	NAPATIE L1-L2 HH1			IEC 870-5-101	Meßwerttelegramm	940
2	Z30/D30	0	198.00	NAPATIE L1-L3 DH1	154.00	NAPATIE L1-L3 DH2	245.00	NAPATIE L1-L3 HH1			IEC 870-5-101	Meßwerttelegramm	941
3	Z28/D28	0	198.00	NAPATIE L2-L3 DH1	154.00	NAPATIE L2-L3 DH2	245.00	NAPATIE L2-L3 HH1			IEC 870-5-101	Meßwerttelegramm	942
4	Z26/D26										IEC 870-5-101	Meßwerttelegramm	943
5	Z24/D24										IEC 870-5-101	Meßwerttelegramm	944
6	Z22/D22										IEC 870-5-101	Meßwerttelegramm	945
7	Z20/D20	0					719.90	PRUD L1 HH1			IEC 870-5-101	Meßwerttelegramm	946
8	Z18/D18	0					719.90	PRUD L2 HH1			IEC 870-5-101	Meßwerttelegramm	947
9	Z16/D16	0					719.90	PRUD L3 HH1			IEC 870-5-101	Meßwerttelegramm	948
10	Z14/D14	0	198.00	NAPATIE L1-L2 DH1	154.00	NAPATIE L1-L2 DH2	245.00	NAPATIE L1-L2 HH1			IEC 870-5-101	Meßwerttelegramm	950
11	Z12/D12	0	198.00	NAPATIE L1-L3 DH1	154.00	NAPATIE L1-L3 DH2	245.00	NAPATIE L1-L3 HH1			IEC 870-5-101	Meßwerttelegramm	951
12	Z10/D10	0	198.00	NAPATIE L2-L3 DH1	154.00	NAPATIE L2-L3 DH2	245.00	NAPATIE L2-L3 HH1			IEC 870-5-101	Meßwerttelegramm	952
13	Z8/D8	1	49.50	FREKVENCIA DH1			50.50	FREKVENCIA HH1			IEC 870-5-101	Meßwerttelegramm	953
14	Z6/D6												
15	Z4/D4												
16	Z2/D2												

Proprietary data, company confidential. All rights reserved.
Confie a titre de secret d'entreprise. Tous droits reservés.
Comunicado como segredo empresarial. Reservados todos os direitos.
Confiado como secreto industrial. Nos reservamos todos los derechos.
The reproduction, transmission or use of this document or its is not permitted without express written authority.
Offenders will be liable for damages. All rights, including rights created by patent grant or registration of a utility model or design, are reserved.

Documentation structur: Standard
Source file: KO050722.ODA

			Date	22.07.2005	VSZ KOSICE	SIEMENS AG ISAIOOLS	Substation control system 6MB	T = /BD 25	
			Drawn	LANG			Analog input module:	+	
			Appr.				Analog values		
R	Remarks	Date	Name	Norm	Orig./Repl. 1/Repl. by		Table	-S103	Page

Station: UW KOSICE
Device: D02 EAG
Module: AE02
Number: 2

Analog channel no.	Connect designation	Section	Bay	Logical device	Lower limit	Analog range	Display value	Dimension	Zero suppression f. display in %	Bay blockage	Zero suppression on acq. in %	Thres val. for switchover in %	Process analog value in I/O uni	With live-zero monitoring	Display in diagram	Archive	Analog recording	Recording mode	No. of val. to be averaged	Scan interval in s	Analog value type	Max. value of analog value	Keep non-return pointer
1	Z32/D32	R220	T202.		TEPLOTA TRANSF.JEDN.L1	20 mA	150.00	GRAD	PV	N	1.0	0.0	N	PV	Y	Y	PERM	Analog value direct		900	CUR	180.00	PV
2	Z30/D30	R220	T202.		TEPLOTA TRANSF.JEDN.L2	20 mA	150.00	GRAD	PV	N	1.0	0.0	N	PV	Y	Y	PERM	Analog value direct		900	CUR	180.00	PV
3	Z28/D28	R220	T202.		TEPLOTA TRANSF.JEDN.L3	20 mA	150.00	GRAD	PV	N	1.0	0.0	N	PV	Y	Y	PERM	Analog value direct		900	CUR	180.00	PV
4	Z26/D26	R220	T202.		TEPLOTA TRANSF.JEDN. Q	20 mA	150.00	GRAD	PV	N	1.0	0.0	N	PV	Y	Y	PERM	Analog value direct		900	CUR	180.00	PV
5	Z24/D24					20 mA								PV									
6	Z22/D22					20 mA								PV									
7	Z20/D20					20 mA								PV									
8	Z18/D18					20 mA								PV									
9	Z16/D16					20 mA								PV									
10	Z14/D14					20 mA								PV									
11	Z12/D12					20 mA								PV									
12	Z10/D10					20 mA								PV									
13	Z8/D8					20 mA								PV									
14	Z6/D6					20 mA								PV									
15	Z4/D4					20 mA								PV									
16	Z2/D2					20 mA								PV									

Proprietary data, company confidential. All rights reserved.
Confia a titre de secret d'entreprise. Tous droits réservés.
Comunicado como segredo empresarial. Reservados todos os direitos.
Confiado como secreto industrial. Nos reservamos todos los derechos.

The reproduction, transmission or use of this document or its is not permitted without express written authority.
Offenders will be liable for damages. All rights, including rights created by patent grant or registration of a utility model or design, are reserved.

Documentation structur: Standard
Source file: KO050722.ODA

Rev.	Remarks	Date	Name	Norm	Date	22.07.2005	VSZ KOSICE	SIEMENS AG ISA TOOLS	Substation control system 6MB Analog input module: Analog values Table	T = /BD 26
					Drawn	LANG				+
					Appr.					-S103
							Orig./Repl. 1/Repl. by			Page 26

Station: UW KOSICE
Device: D02 EAG
Module: AE02
Number: 2

Analog channel no.	Connect designation	Calculated demand value	Derive percentage value	Static limit monitoring: Filtering time in s	Lower limit 1	Indication at lower limit 1	Lower limit 2	Indication at lower limit 2	Upper limit 1	Indication at higher limit 1	Upper limit 2	Indication at higher limit 2	Teletrans. FP raw val. Master station	Name of telegram	Name of info element
1	Z32/D32	PV	PV	0					70.00	TEPLOTA TRANSF.JEDN.L1 HH1	80.00	TEPLOTA TRANSF.JEDN.L1 HH2	IEC 870-5-101	Meßwerttelegramm	954
2	Z30/D30	PV	PV	0					70.00	TEPLOTA TRANSF.JEDN.L2 HH1	80.00	TEPLOTA TRANSF.JEDN.L2 HH2	IEC 870-5-101	Meßwerttelegramm	955
3	Z28/D28	PV	PV	0					70.00	TEPLOTA TRANSF.JEDN.L3 HH1	80.00	TEPLOTA TRANSF.JEDN.L3 HH2	IEC 870-5-101	Meßwerttelegramm	956
4	Z26/D26	PV	PV	0					70.00	TEPLOTA TRANSF.JEDN. Q HH1	80.00	TEPLOTA TRANSF.JEDN. Q HH2	IEC 870-5-101	Meßwerttelegramm	957
5	Z24/D24														
6	Z22/D22														
7	Z20/D20														
8	Z18/D18														
9	Z16/D16														
10	Z14/D14														
11	Z12/D12														
12	Z10/D10														
13	Z8/D8														
14	Z6/D6														
15	Z4/D4														
16	Z2/D2														

Proprietary data, company confidential. All rights reserved.
Confie a titre de secret d'entreprise. Tous droits r,serv,s.
Comunicado como segredo empresarial. Reservados todos os direitos.
Confiado como secreto industrial. Nos reservamos todos los derechos.
The reproduction, transmission or use of this document or its is not permitted without expres written authority.
Offenders will be liable for damages. All rights, including rights created by patent grant or registration of a utility model or design, are reserved

Documentation structur: Standard
Source file: KO050722.ODA

			Date	22.07.2005	VSZ KOSICE	SIEMENS AG ISAOOLS	Substation control system 6MB	T =	/BD 27
			Drawn	LANG			Analog input module:	+	
			Appr.				Analog values	-S103	Page
F	Remarks	Date	Name	Norm	Orig./Repl. 1/Repl. by		Table		

Station: UW KOSICE
Device: D02 EAG
Module: BM01
Number: 1

With mcb: No
Last input with: Freely marshalable

Input	Connect designation	Section	Bay	Logical device	Lower limit	Value text	Column section	Column bay	Column logical device	Column information	Column value text	With command	Indication type	Entry in event list	Entry in alarm list	Acknowledge	Display in indication area	Indication class	Entry in SML	Display in diagram	Display of intermed. pos.	Acknowledge	Display under voltage level	Indication class	Archive	Operational indications	Protection indications	Filt. of raised & cleared	Filtering of intermed. pos.
1	B22	R220	DA02	ODPOJOVAC Q1	SCHALTZUSTAND	vyp.	22	27	39	0	75	LZM	DI	O					N	Y	N	O	Y	2	R	Y	N		N
2	Z22	R220	DA02	ODPOJOVAC Q1	SCHALTZUSTAND	zap.	22	27	39	0	75	LZM	DI	O					N	Y	N	O	Y	2	R	Y	N		N
3	D24	R220	DA02	VYPINAC Q0	SCHALTZUSTAND	vyp.	22	27	39	0	75	LZM	DI	O					N	Y	N	O	Y	2	R	Y	N		N
4	B24	R220	DA02	VYPINAC Q0	SCHALTZUSTAND	zap.	22	27	39	0	75	LZM	DI	O					N	Y	N	O	Y	2	R	Y	N		N
5	Z24	R220	DA02	ODPOJOVAC Q6	SCHALTZUSTAND	vyp.	22	27	39	0	75	LZM	DI	O					N	Y	N	O	Y	2	R	Y	N		N
6	D26	R220	DA02	ODPOJOVAC Q6	SCHALTZUSTAND	zap.	22	27	39	0	75	LZM	DI	O					N	Y	N	O	Y	2	R	Y	N		N
7	B26	R220	DA02	ODPOJOVAC QE6	SCHALTZUSTAND	vyp.	22	27	39	0	75	LZM	DI	O					N	Y	N	O	Y	2	R	Y	N		N
8	Z26	R220	DA02	ODPOJOVAC QE6	SCHALTZUSTAND	zap.	22	27	39	0	75	LZM	DI	O					N	Y	N	O	Y	2	R	Y	N		N
9	D28	R220	DA02	ODPOJOVAC Q8	SCHALTZUSTAND	vyp.	22	27	39	0	75	LZM	DI	O					N	Y	N	O	Y	2	R	Y	N		N
10	B28	R220	DA02	ODPOJOVAC Q8	SCHALTZUSTAND	zap.	22	27	39	0	75	LZM	DI	O					N	Y	N	O	Y	2	R	Y	N		N
11	Z28	R220	DA02		8TK PORUCHA	KON ZAC	22	27	0	39	75	PV	SI	R/C	Y	R/C	Y	1	N	N					R/C	Y	N	N	
12	D30	R220	DA02		VYPN.VYPINAC.BEZ POVELU	KON ZAC	22	27	0	39	75	PV	TR	O	Y	O	Y	1	N	N					R	Y	N		
13	B30	R220	DA02		PREVADZKA S1	KON ZAC	22	27	0	39	75	PV	SI	R/C	Y	R/C	Y	1	N	Y		N	N		R/C	Y	N	N	
14	Z30	R220	DA02		S5 POLOHA VYPN./MIESTNE	KON ZAC	22	27	0	39	75	PV	SI	R/C	Y	R/C	Y	1	N	Y		N	N		R/C	Y	N	N	
15	D32	R220	DA02		CHYBA OBSLUHY	KON ZAC	22	27	0	39	75	PV	SI	R/C	N				N	N					R/C	Y	N	N	
16	B32	R220	DA02		PREKROCENIE CASU BEHU	KON ZAC	22	27	0	39	75	PV	SI	R/C	N				N	N					R/C	Y	N	N	

Proprietary data, company confidential. All rights reserved.
Confie a título de secret dentreprise. Tous droits reservés.
Comunicado como segredo empresarial. Reservados todos os direitos.
Confiado como secreto industrial. Nos reservamos todos los derechos.

The reproduction, transmission or use of this document or its is not permitted without express written authority.
Offenders will be liable for damages. All rights, including rights created by patent grant or registration of a utility model or design, are reserved

Documentation structur: Standard
Source file: K0050722.ODA

Rev.	Remarks	Date	Name	Norm
			Date	22.07.2005
			Drawn	LANG
			Appr.	

VSZ KOSICE

Orig./Repl. 1/Repl. by

SIEMENS AG
ISATOOLS

Substation control system 6MB
Command and signalling module:
Input assignment
Table

T = /BD 28
+
-S103
Page 28

Station: UW KOSICE
Device: D02 EAG
Module: BM01
Number: 1

With mcb: No
Last input with: Freely marshalable

Input	Connect designation	Bay blockage	Monitored as feedback	Checkback monit. time in s	Command derivation	Indication derivation	Remote transmission FP: Master station	Name of telegram	Name of info element
1	B22	N	Y	20.0			IEC 870-5-101	Meldungstelegramm DM	531
2	Z22	N	Y	20.0			IEC 870-5-101	Meldungstelegramm DM	531
3	D24	N	Y	20.0			IEC 870-5-101	Meldungstelegramm DM	530
4	B24	N	Y	20.0			IEC 870-5-101	Meldungstelegramm DM	530
5	Z24	N	Y	20.0			IEC 870-5-101	Meldungstelegramm DM	532
6	D26	N	Y	20.0			IEC 870-5-101	Meldungstelegramm DM	532
7	B26	N	Y	20.0			IEC 870-5-101	Meldungstelegramm DM	533
8	Z26	N	Y	20.0			IEC 870-5-101	Meldungstelegramm DM	533
9	D28	N	Y	20.0			IEC 870-5-101	Meldungstelegramm DM	534
10	B28	N	Y	20.0			IEC 870-5-101	Meldungstelegramm DM	534
11	Z28	N	N		Alarm 1 (Hupenbefehl)	KVIT 8TK			
12	D30	N	N		Alarm 1 (Hupenbefehl)	KVIT 8TK			
13	B30	N	N		Alarm 1 (Hupenbefehl)				
14	Z30	N	N		Alarm 1 (Hupenbefehl)				
15	D32	N	N		Alarm 1 (Hupenbefehl)	KVIT 8TK			
16	B32	N	N		Alarm 1 (Hupenbefehl)	KVIT 8TK			

Proprietary data, company confidential. All rights reserved.
Confia a ltha de secret d'entreprise. Tous droits reservis.
Comunicado como segredo empresarial. Reservados todos os direitos.
Contiene secreto industrial. Nos reservamos todos los derechos.
The reproduction, transmission or use of this document or its contents is not permitted without express written authority. Offenders will be liable for damages. All rights, including rights created by patent grant or registration of a utility model or design, are reserved.

Documentation structur: Standard
Source file: KO050722.ODA

			Date	22.07.2005	VSZ KOSICE
			Drawn	LANG	
			Appr.		
R	Remarks	Date	Name	Norm	Orig./Repl. 1/Repl. by

SIEMENS AG
ISATOOLS

Substation control system 6MB
Command and signalling module:
Input assignment
Table

T = /BD 29
+
-S103
Page

Station: UW KOSICE
Device: D02 EAG
Module: BM01
Number: 1

With mcb: No

Output	Connect designation	Section	Bay	Logical device	Lower limit	Value text	Column section	Column bay	Column logical device	Column information	Column value text	Type of command	Entry in event list	Entry in alarm list	Entry in SML	Display in diag. as select. field	Archive	Operational indications	Protection indications	Overtravel time in s	SW termination time in s	Checkback via: Device	Module	Input	Checkback monit. time in s
1	Z2/Z4	R220	DA02	ODPOJOVAC Q1	SCHALTZUSTAND	vyp.	22	27	39	0	75	DC	O		N	PV	R	Y	N	0.0		D02 EAG	BM01	1	20.0
2	D4/B4	R220	DA02	ODPOJOVAC Q1	SCHALTZUSTAND	zap.	22	27	39	0	75	DC	O		N	PV	R	Y	N	0.0		D02 EAG	BM01	1	20.0
3	D6/B6	R220	DA02	VYPINAC Q0	SCHALTZUSTAND	vyp.	22	27	39	0	75	DC	O		N	PV	R	Y	N	0.0		D02 EAG	BM01	3	20.0
4	Z6/Z8	R220	DA02	VYPINAC Q0	SCHALTZUSTAND	zap.	22	27	39	0	75	DC	O		N	PV	R	Y	N	0.0		D02 EAG	BM01	3	20.0
5	D8/B8	R220	DA02	ODPOJOVAC Q6	SCHALTZUSTAND	vyp.	22	27	39	0	75	DC	O		N	PV	R	Y	N	0.0		D02 EAG	BM01	5	20.0
6	D10/B10	R220	DA02	ODPOJOVAC Q6	SCHALTZUSTAND	zap.	22	27	39	0	75	DC	O		N	PV	R	Y	N	0.0		D02 EAG	BM01	5	20.0
7	Z10/Z12	R220	DA02	ODPOJOVAC QE6	SCHALTZUSTAND	vyp.	22	27	39	0	75	DC	O		N	PV	R	Y	N	0.0		D02 EAG	BM01	7	20.0
8	D12/B12	R220	DA02	ODPOJOVAC QE6	SCHALTZUSTAND	zap.	22	27	39	0	75	DC	O		N	PV	R	Y	N	0.0		D02 EAG	BM01	7	20.0
9	D14/B14	R220	DA02	ODPOJOVAC Q8	SCHALTZUSTAND	vyp.	22	27	39	0	75	DC	O		N	PV	R	Y	N	0.0		D02 EAG	BM01	9	20.0
10	Z14/Z16	R220	DA02	ODPOJOVAC Q8	SCHALTZUSTAND	zap.	22	27	39	0	75	DC	O		N	PV	R	Y	N	0.0		D02 EAG	BM01	9	20.0
11	D16/B16															PV									
12	D18/B18															PV									
14	D20/B20	R220	DA02		KVITOVANIE	KON ZAC	22	27	0	39	75	SC	O	N	N	PV	R	N	Y		0.6				
15	D22/Z20	R220	DA02		DEBLOKACIA BLOKOVANIA	KON ZAC	22	27	0	39	75	SC	R/C	N	N	PV	R/C	Y	N						

Proprietary data, company confidential. All rights reserved.
Confie a titre de secret d'entreprise. Tous droits reservés.
Comunicado como segredo empresarial. Reservados todos os direitos.
Confiado como secreto industrial. Nos reservamos todos los derechos.

The reproduction, transmission or use of this document or its is not permitted without expres written authority.
Offenders will be liable for damages. All rights, including rights created by patent grant or registration of a utility model or design, are reserved

Documentation structur: Standard
Source file: KO050722.ODA

Rev.	Remarks	Date	Name	Norm	Date	22.07.2005	VSZ KOSICE	SIEMENS AG ISA TOOLS	Substation control system 6MB Command and signalling module: Commands Table	T = /BD 30 + -S103	Page 30
					Drawn	LANG					
					Appr.						
							Orig./Repl. 1/Repl. by				

Station: UW KOSICE
Device: D02 EAG
Module: BM01
Number: 1

With mcb: No

Output	Connect designation	Interlocking type:	Switch interlocking
1	Z2/Z4	SCHALTGERÄT	
2	D4/B4	SCHALTGERÄT	
3	D6/B6	SCHALTGERÄT	
4	Z6/Z8	SCHALTGERÄT	
5	D8/B8	SCHALTGERÄT	
6	D10/B10	SCHALTGERÄT	
7	Z10/Z12	SCHALTGERÄT	BEI UL1-L2 >70% DA02
8	D12/B12	SCHALTGERÄT	BEI UL1-L2 >70% DA02
9	D14/B14	SCHALTGERÄT	
10	Z14/Z16	SCHALTGERÄT	
11	D16/B16		
12	D18/B18		
14	D20/B20	SCHALTGERÄT	
15	D22/Z20	SCHALTGERÄT	

Proprietary data, company confidential. All rights reserved.
Confie a titre de secret d'entreprise. Tous droits réservés.
Comunicado como segredo empresarial. Reservados todos os direitos.
Confiado como secreto industrial. Nos reservamos todos los derechos.

The reproduction, transmission or use of theis document or its is not permitted without express written authority.
Offenders will be liable for damages. All rights, including rights created by patent grant or registration of a utility model or design, are reserved.

Documentation structur: Standard
Source file: KO050722.ODA

			Date	22.07.2005	VSZ KOSICE	SIEMENS AG ISA TOOLS	Substation control system 6MB Command and signalling module: Commands Table
			Drawn	LANG			
			Appr.				
R	Remarks	Date	Name	Norm	Orig./Repl. 1/Repl. by		

T = /BD 31
+
-S103
Page

Station: UW KOSICE
Device: D02 EAG
Module: BM02
Number: 2

With mcb: No
Last input with: Freely marshalable

Input	Connect designation	Section	Bay	Logical device	Lower limit	Value text		Column section	Column bay	Column logical device	Column information	Column value text	With command	Indication type	Entry in event list	Entry in alarm list	Acknowledge	Display in indication area	Indication class	Entry in SML	Display in diagram	Archive	Operational indications	Protection indications	Filt. of raised & cleared	Bay blockage	Monitored as feedback	Command derivation
1	B22	R220	DA02		Q0 STRATA SF6	KON	ZAC	22	27	0	39	75	PV	SI	R/C	Y	R/C	Y	1	N	N	R/C	N	Y	N	N	N	Alarm 1 (Hupenbefehl)
2	Z22	R220	DA02		Q0 BLOKOV.VYP/ZAP 1.OBV	KON	ZAC	22	27	0	39	75	PV	SI	R/C	Y	R/C	Y	1	N	N	R/C	N	Y	N	N	N	Alarm 1 (Hupenbefehl)
3	D24	R220	DA02		Q0 STRATA STR.NAP.VYKUROV	KON	ZAC	22	27	0	39	75	PV	SI	R/C	Y	R/C	Y	1	N	N	R/C	N	Y	N	N	N	Alarm 1 (Hupenbefehl)
4	B24	R220	DA02		Q0 STRATA STR.NAP.POHONOV	KON	ZAC	22	27	0	39	75	PV	SI	R/C	Y	R/C	Y	1	N	N	R/C	N	Y	N	N	N	Alarm 1 (Hupenbefehl)
5	Z24	R220	DA02		POKLES TLAKU MER.TRAN.+3.5	KON	ZAC	22	27	0	39	75	PV	SI	R/C	Y	R/C	Y	1	N	N	R/C	N	Y	N	N	N	Alarm 1 (Hupenbefehl)
6	D26	R220	DA02		POKLES TLAKU MER.TRAN.+3	KON	ZAC	22	27	0	39	75	PV	SI	R/C	Y	R/C	Y	1	N	N	R/C	N	Y	N	N	N	Alarm 1 (Hupenbefehl)
7	B26	R220	DA02		VYPN.ISTICA NAPAJ.PREVOD.	KON	ZAC	22	27	0	39	75	PV	SI	R/C	Y	R/C	Y	1	N	N	R/C	N	Y	N	N	N	Alarm 1 (Hupenbefehl)
8	Z26	R220	TR		STRATA SIG.NAP.REZ.JEDN. Q	KON	ZAC	22	27	0	39	75	PV	SI	R/C	Y	R/C	Y	1	N	N	R/C	N	Y	N	N	N	Alarm 1 (Hupenbefehl)
9	D28	R220	T202		PARAL.REG.RUCNE-VIAG	KON	ZAC	22	27	0	39	75	PV	SI	R/C	N				N	N	R/C	Y	N	N	N	N	
10	B28	R220	T202		PARAL.REG.RUCNE-MENEJ	KON	ZAC	22	27	0	39	75	PV	SI	R/C	N				N	N	R/C	Y	N	N	N	N	
11	Z28	R220	T202		STRATA j.s.NAP. REGULACIE	KON	ZAC	22	27	0	39	75	PV	SI	R/C	Y	R/C	Y	1	N	N	R/C	N	Y	N	N	N	Alarm 1 (Hupenbefehl)
12	D30	R220	T202		STRATA st. NAP. REGULACIE	KON	ZAC	22	27	0	39	75	PV	SI	R/C	Y	R/C	Y	1	N	N	R/C	N	Y	N	N	N	Alarm 1 (Hupenbefehl)
13	B30	R220	T202		REGULACIA-RUCNE	KON	ZAC	22	27	0	39	75	PV	SI	R/C	N				N	N	R/C	Y	N	N	N	N	
14	Z30	R220	T202		REGULACIA-VYPNUTA	KON	ZAC	22	27	0	39	75	PV	SI	R/C	N				N	N	R/C	Y	N	N	N	N	
15	D32	R220	T202		REGULACIA-POCITAC	KON	ZAC	22	27	0	39	75	PV	SI	R/C	N				N	N	R/C	Y	N	N	N	N	
16	B32	R220	DA02		VYPN.ISTICA 100V,50Hz-V277	KON	ZAC	22	27	0	39	75	PV	SI	R/C	Y	R/C	Y	1	N	N	R/C	N	Y	N	N	N	Alarm 1 (Hupenbefehl)

Proprietary data, company confidential. All rights reserved.
Contém a linha de sigilo da empresa. Todos os direitos reservados.
Contenido como secreto empresarial. Reservados todos los derechos.
Contido como segredo empresarial. Reservados todos os direitos.
Contido como secreto industrial. Nos reservamos todos los derechos.

The reproduction, transmission or use of this document or its contents is not permitted without express written authority. Offenders will be held liable for damages. All rights, including rights created by patent grant or registration of a utility model or design, are reserved.

Documentation structur: Standard
Source file: KO050722.ODA

Rev.	Remarks	Date	Name	Norm		Date	22.07.2005	VSZ KOSICE	SIEMENS AG ISAOOLS	Substation control system 6MB Command and signalling module: Input assignment Table	T = /BD 32 + -S103 Page 32
						Drawn	LANG				
						Appr.					
						Orig./Repl. 1/Repl. by					

Station: UW KOSICE
Device: D02 EAG
Module: BM02
Number: 2

With mcb: No

Output	Connect designation	Section	Bay	Logical device	Lower limit	Value text	Column section	Column bay	Column logical device	Column information	Column value text	Type of command	Entry in event list	Entry in SML	Display in diag. as select. field	Archive	Operational indications	Protection indications	SW termination time in s	Interlocking type:	Switch interlocking
1	Z2/Z4	R220	T202	L1 TRAFO	ODBOCKA VO FAZE	MENEJ	22	27	0	39	75	DC	O	N	LZM	N			1.0	SCHALTGERÄT	
2	D4/B4	R220	T202	L1 TRAFO	ODBOCKA VO FAZE	VIAC	22	27	0	39	75	DC	O	N	LZM	N			1.0	SCHALTGERÄT	
3	D6/B6	R220	T202	L2 TRAFO	ODBOCKA VO FAZE	MENEJ	22	27	0	39	75	DC	O	N	LZM	N			1.0	SCHALTGERÄT	
4	Z6/Z8	R220	T202	L2 TRAFO	ODBOCKA VO FAZE	VIAC	22	27	0	39	75	DC	O	N	LZM	N			1.0	SCHALTGERÄT	
5	D8/B8	R220	T202	L3 TRAFO	ODBOCKA VO FAZE	MENEJ	22	27	0	39	75	DC	O	N	LZM	N			1.0	SCHALTGERÄT	
6	D10/B10	R220	T202	L3 TRAFO	ODBOCKA VO FAZE	VIAC	22	27	0	39	75	DC	O	N	LZM	N			1.0	SCHALTGERÄT	
7	Z10/Z12	R220	T202	Q TRAFO	ODBOCKA VO FAZE	MENEJ	22	27	0	39	75	DC	O	N	LZM	N			1.0	SCHALTGERÄT	
8	D12/B12	R220	T202	Q TRAFO	ODBOCKA VO FAZE	VIAC	22	27	0	39	75	DC	O	N	LZM	N			1.0	SCHALTGERÄT	
9	D14/B14	R220	T202		PARALELNA REGULACIA	MENEJ	22	27	0	39	75	DC	O	N	LZM	R	Y	N	1.0	SCHALTGERÄT	Stufengleichheit T202
10	Z14/Z16	R220	T202		PARALELNA REGULACIA	VIAC	22	27	0	39	75	DC	O	N	LZM	R	Y	N	1.0	SCHALTGERÄT	Stufengleichheit T202
11	D16/B16														PV						
12	D18/B18														PV						
14	D20/B20														PV						
15	D22/Z20														PV						

Proprietary data, company confidential. All rights reserved
Conf.a a Vita de secret de Intreprindere. Toate drepturi rezerva.
Comunicado como segredo empresarial. Reservados todos os direitos.
Confiado como secreto industrial. Nos reservamos todos los derechos.
The reproduction, transmission or use of this document or its
is not permitted without express written authority. Offenders will be liable for damages. All rights, including rights
created by patent grant or registration of a utility model or design, are reserved

Documentation structur: Standard
Source file: KO050722.ODA

Date	22.07.2005	VSZ KOSICE	SIEMENS AG ISATOOLS	Substation control system 6MB
Drawn	LANG			Command and signalling module:
Appr.				Commands
Remarks	Date	Name Norm	Orig./Repl. 1/Repl. by	Table

T = /BD 33
+
-S103
Page

Proprietary data, company confidential. All rights reserved
Confidencial de secreto empresarial. Todos los derechos reservados
Confidencial como segredo empresarial. Reservados todos os direitos
Confidencial como secreto industrial. Nos reservamos todos los derechos
The reproduction, transmission or use of this document or its contents is not permitted without express written authority. Offenders will be liable for damages. All rights, including rights created by patent grant or registration of a utility model or design, are reserved

Station: UW KOSICE
Device: D02 EAG
Module: DE01
Number: 1

Input	Connect designation	Section	Bay	Logical device	Lower limit	Value text		Column section	Column bay	Column logical device	Column information	Column value text	With command	Indication type	Entry in event list	Entry in alarm list	Acknowledge	Display in indication area	Indication class	Entry in SML	Display in diagram	Acknowledge	Display under voltage level	Indication class	Archive	Operational indications	Protection indications	Filt. of raised & cleared	Bay blockage	Monitored as feedback
1	Z32	R220	DA02		VYPN.ISTICA 100V,50Hz-U0	KON	ZAC	22	27	0	39	75	PV	SI	R/C	Y	R/C	Y	1	N	Y	N	N		R/C	N	Y	N	N	N
2	D32	R220	DA02		VYPN.ISTICA 100V,50Hz-HL.O.	KON	ZAC	22	27	0	39	75	PV	SI	R/C	Y	R/C	Y	1	N	Y	N	N		R/C	N	Y	N	N	N
3	Z30	R220	DA02		VYPN.ISTICA 100V,50Hz-ZAL.O.	KON	ZAC	22	27	0	39	75	PV	SI	R/C	Y	R/C	Y	1	N	Y	N	N		R/C	N	Y	N	N	N
4	D30	R220	DA02		VYPN.ISTICA 100V,50Hz-MERANIE	KON	ZAC	22	27	0	39	75	PV	SI	R/C	Y	R/C	Y	1	N	Y	N	N		R/C	N	Y	N	N	N
5	Z28	R220	DA02		VYPN.ISTICA 100V,50Hz-ELEMERY	KON	ZAC	22	27	0	39	75	PV	SI	R/C	Y	R/C	Y	1	N	Y	N	N		R/C	N	Y	N	N	N
6	D28	R220	DA02		STRATA NAPATIA +-1.11	KON	ZAC	22	27	0	39	75	PV	SI	R/C	Y	R/C	Y	1	N	Y	N	N		R/C	N	Y	N	N	N
7	Z26	R220	DA02		STRATA NAPATIA +-1.21	KON	ZAC	22	27	0	39	75	PV	SI	R/C	Y	R/C	Y	1	N	Y	N	N		R/C	N	Y	N	N	N
8	D26	R220	DA02		STRATA NAPATIA +-1.31	KON	ZAC	22	27	0	39	75	PV	SI	R/C	Y	R/C	Y	1	N	Y	N	N		R/C	N	Y	N	N	N
9	Z24	R220	DA02		NESUHLAS PREPIN.OCHR.A REGUL	KON	ZAC	22	27	0	39	75	PV	SI	R/C	Y	R/C	Y	2	N	Y	O	Y	2	R/C	N	Y	N	N	N
10	D24	R220	DA02		Q-JEDNOTKA NEZARADENA DO L1	KON	ZAC	22	27	0	39	75	PV	SI	R/C	N				N	Y	N	N		R/C	Y	N	N	N	N
11	Z22	R220	DA02		Q-JEDNOTKA NEZARADENA DO L2	KON	ZAC	22	27	0	39	75	PV	SI	R/C	N				N	Y	N	N		R/C	Y	N	N	N	N
12	D22	R220	DA02		Q-JEDNOTKA NEZARADENA DO L3	KON	ZAC	22	27	0	39	75	PV	SI	R/C	N				N	Y	N	N		R/C	Y	N	N	N	N
13	Z20	R220	T202	L1	PORUCHA VENTILATORA 1	KON	ZAC	22	27	0	39	75	PV	SI	R/C	N				N	Y	O	Y	1	R/C	Y	N	N	N	N
14	D20	R220	T202	L1	PORUCHA VENTILATORA 2	KON	ZAC	22	27	0	39	75	PV	SI	R/C	N				N	Y	O	Y	1	R/C	Y	N	N	N	N
15	Z18	R220	T202	L1	PORUCHA VENTILATORA 3	KON	ZAC	22	27	0	39	75	PV	SI	R/C	N				N	Y	O	Y	1	R/C	Y	N	N	N	N
16	D18	R220	T202	L1	PORUCHA VENTILATORA 4	KON	ZAC	22	27	0	39	75	PV	SI	R/C	N				N	Y	O	Y	1	R/C	Y	N	N	N	N
17	Z16	R220	T202	L1	PORUCHA CERPADLA 1	KON	ZAC	22	27	0	39	75	PV	SI	R/C	N				N	Y	O	Y	1	R/C	Y	N	N	N	N
18	D16	R220	T202	L1	PORUCHA CERPADLA 2	KON	ZAC	22	27	0	39	75	PV	SI	R/C	N				N	Y	O	Y	1	R/C	Y	N	N	N	N
19	Z14	R220	T202	L2	PORUCHA VENTILATORA 1	KON	ZAC	22	27	0	39	75	PV	SI	R/C	N				N	Y	O	Y	1	R/C	Y	N	N	N	N
20	D14	R220	T202	L2	PORUCHA VENTILATORA 2	KON	ZAC	22	27	0	39	75	PV	SI	R/C	N				N	Y	O	Y	1	R/C	Y	N	N	N	N
21	Z12	R220	T202	L2	PORUCHA VENTILATORA 3	KON	ZAC	22	27	0	39	75	PV	SI	R/C	N				N	Y	O	Y	1	R/C	Y	N	N	N	N
22	D12	R220	T202	L2	PORUCHA VENTILATORA 4	KON	ZAC	22	27	0	39	75	PV	SI	R/C	N				N	Y	O	Y	1	R/C	Y	N	N	N	N
23	Z10	R220	T202	L2	PORUCHA CERPADLA 1	KON	ZAC	22	27	0	39	75	PV	SI	R/C	N				N	Y	O	Y	1	R/C	Y	N	N	N	N
24	D10	R220	T202	L2	PORUCHA CERPADLA 2	KON	ZAC	22	27	0	39	75	PV	SI	R/C	N				N	Y	O	Y	1	R/C	Y	N	N	N	N
25	Z8	R220	T202	L3	PORUCHA VENTILATORA 1	KON	ZAC	22	27	0	39	75	PV	SI	R/C	N				N	Y	O	Y	1	R/C	Y	N	N	N	N
26	D8	R220	T202	L3	PORUCHA VENTILATORA 2	KON	ZAC	22	27	0	39	75	PV	SI	R/C	N				N	Y	O	Y	1	R/C	Y	N	N	N	N
27	Z6	R220	T202	L3	PORUCHA VENTILATORA 3	KON	ZAC	22	27	0	39	75	PV	SI	R/C	N				N	Y	O	Y	1	R/C	Y	N	N	N	N
28	D6	R220	T202	L3	PORUCHA VENTILATORA 4	KON	ZAC	22	27	0	39	75	PV	SI	R/C	N				N	Y	O	Y	1	R/C	Y	N	N	N	N
29	Z4	R220	T202	L3	PORUCHA CERPADLA 1	KON	ZAC	22	27	0	39	75	PV	SI	R/C	N				N	Y	O	Y	1	R/C	Y	N	N	N	N
30	D4	R220	T202	L3	PORUCHA CERPADLA 2	KON	ZAC	22	27	0	39	75	PV	SI	R/C	N				N	Y	O	Y	1	R/C	Y	N	N	N	N
31	Z2	R220	T202		BEH PARELELNEJ REGULACIE	KON	ZAC	22	27	0	39	75	PV	SI	R/C	N				N	Y	O	Y	2	R/C	Y	N	N	N	N
32	D2	R220	T202		BLOKOV. PARALEL. REGULACIE	KON	ZAC	22	27	0	39	75	PV	SI	R/C	N				N	Y	O	Y	2	R/C	Y	N	N	N	N

Standard KO050722.ODA
Documentation structur:
Source file:

Rev.	Remarks	Date	Name	Norm	Date	22.07.2005	VSZ KOSICE	SIEMENS AG ISATOOLS	Substation control system 6MB Digital input module: Input assignment Table
					Drawn	LANG			
					Appr.				
					Orig./Repl. 1/Repl. by				

T = /BD 34
+
-S103

Station: UW KOSICE
Device: D02 EAG
Module: DE01
Number: 1

Input	Connect designation	Command derivation	Indication derivation
1	Z32	Alarm 1 (Hupenbefehl)	
2	D32	Alarm 1 (Hupenbefehl)	
3	Z30	Alarm 1 (Hupenbefehl)	
4	D30	Alarm 1 (Hupenbefehl)	
5	Z28	Alarm 1 (Hupenbefehl)	
6	D28	Alarm 1 (Hupenbefehl)	
7	Z26	Alarm 1 (Hupenbefehl)	
8	D26	Alarm 1 (Hupenbefehl)	
9	Z24	Alarm 1 (Hupenbefehl)	
10	D24		VERTEILER TRAFOSTUFEN T202
11	Z22		VERTEILER TRAFOSTUFEN T202
12	D22		VERTEILER TRAFOSTUFEN T202
13	Z20		
14	D20		
15	Z18		
16	D18		
17	Z16		
18	D16		
19	Z14		
20	D14		
21	Z12		
22	D12		
23	Z10		
24	D10		
25	Z8		
26	D8		
27	Z6		
28	D6		
29	Z4		
30	D4		
31	Z2		
32	D2		

Proprietary data, company confidential. All rights reserved.
Confiado a tiro de secret d'entreprise. Tous droits réservés.
Comunicado como segredo empresarial. Reservados todos os direitos.
Confiado como secreto industrial. Nos reservamos todos los derechos.
The reproduction, transmission or use of this document or its contents is not permitted without express written authority. Offenders will be liable for damages. All rights, including rights created by patent grant or registration of a utility model or design, are reserved.

Documentation structure: Standard
Source file: K0050722.ODA

			Date	22.07.2005	VSZ KOSICE
			Drawn	LANG	
			Appr.		
R	Remarks	Date	Name	Norm	Orig./Repl. 1/Repl. by

SIEMENS AG
ISATOOLS

Substation control system 6MB
Digital input module:
Input assignment
Table

T = /BD 35
+
-S103
Page

Proprietary data, company confidential. All rights reserved
Confia a tthe da secret dentreprise. Tous droits reservs
Comunicado como segredo empresarial. Reservados todos os direitos
Confiado como secreto industrial. Nos reservamos todos los derechos
The reproduction, transmission or use of this document or its
is not permitted without expres written authority.
Offenders will be liable for damages. All rights, including rights
created by patent grant or registration of a utility model or design, are reserved

Station: UW KOSICE
Device: D02 EAG
Module: DE02
Number: 2

Input	Connect designation	Section	Bay	Logical device	Lower limit	Value text	Column section	Column bay	Column logical device	Column information	Column value text	With command	Indication type	Entry in event list	Entry in alarm list	Acknowledge	Display in indication area	Indication class	Entry in SML	Display in diagram	Acknowledge	Archive	Operational indications	Protection indications	Filt. of raised & cleared	Bay blockage	Monitored as feedback	Checkback monit. time in s
1	Z32	R220	T202	L1	TRAFO ODBOCKA ST.C.		22	27	0	38				O						Y	N	N				N	Y	20.0
2	D32	R220	T202	L1	TRAFO ODBOCKA ST.C.		22	27	0	38				O						Y	N	N				N	Y	20.0
3	Z30	R220	T202	L1	TRAFO ODBOCKA ST.C.		22	27	0	38				O						Y	N	N				N	Y	20.0
4	D30	R220	T202	L1	TRAFO ODBOCKA ST.C.		22	27	0	38				O						Y	N	N				N	Y	20.0
5	Z28	R220	T202	L1	TRAFO ODBOCKA ST.C.		22	27	0	38				O						Y	N	N				N	Y	20.0
6	D28	R220	T202	L1	TRAFO ODBOCKA ST.C.		22	27	0	38				O						Y	N	N				N	Y	20.0
7	Z26	R220	T202	L1	TRAFO ODBOCKA ST.C.		22	27	0	38				O						Y	N	N				N	Y	20.0
8	D26	R220	T202	L1	TRAFO ODBOCKA ST.C.		22	27	0	38				O						Y	N	N				N	Y	20.0
9	Z24	R220	T202	L2	TRAFO ODBOCKA ST.C.		22	27	0	38				O						Y	N	N				N	Y	20.0
10	D24	R220	T202	L2	TRAFO ODBOCKA ST.C.		22	27	0	38				O						Y	N	N				N	Y	20.0
11	Z22	R220	T202	L2	TRAFO ODBOCKA ST.C.		22	27	0	38				O						Y	N	N				N	Y	20.0
12	D22	R220	T202	L2	TRAFO ODBOCKA ST.C.		22	27	0	38				O						Y	N	N				N	Y	20.0
13	Z20	R220	T202	L2	TRAFO ODBOCKA ST.C.		22	27	0	38				O						Y	N	N				N	Y	20.0
14	D20	R220	T202	L2	TRAFO ODBOCKA ST.C.		22	27	0	38				O						Y	N	N				N	Y	20.0
15	Z18	R220	T202	L2	TRAFO ODBOCKA ST.C.		22	27	0	38				O						Y	N	N				N	Y	20.0
16	D18	R220	T202	L2	TRAFO ODBOCKA ST.C.		22	27	0	38				O						Y	N	N				N	Y	20.0
17	Z16	R220	T202	L3	TRAFO ODBOCKA ST.C.		22	27	0	38				O						Y	N	N				N	Y	20.0
18	D16	R220	T202	L3	TRAFO ODBOCKA ST.C.		22	27	0	38				O						Y	N	N				N	Y	20.0
19	Z14	R220	T202	L3	TRAFO ODBOCKA ST.C.		22	27	0	38				O						Y	N	N				N	Y	20.0
20	D14	R220	T202	L3	TRAFO ODBOCKA ST.C.		22	27	0	38				O						Y	N	N				N	Y	20.0
21	Z12	R220	T202	L3	TRAFO ODBOCKA ST.C.		22	27	0	38				O						Y	N	N				N	Y	20.0
22	D12	R220	T202	L3	TRAFO ODBOCKA ST.C.		22	27	0	38				O						Y	N	N				N	Y	20.0
23	Z10	R220	T202	L3	TRAFO ODBOCKA ST.C.		22	27	0	38				O						Y	N	N				N	Y	20.0
24	D10	R220	T202	L3	TRAFO ODBOCKA ST.C.		22	27	0	38				O						Y	N	N				N	Y	20.0
25	Z8	R220	T202	L1	BUCHHOLZ NADOBA-VYSTR.1.ST.	KON ZAC	22	27	0	39	75	PV	SI	R/C	Y	R/C	Y	1	N	N		R/C	N	Y	N	N	N	
26	D8	R220	T202	L1	BUCHHOLZ NADOBA-VYSTR.2.ST.	KON ZAC	22	27	0	39	75	PV	SI	R/C	Y	R/C	Y	1	N	N		R/C	N	Y	N	N	N	
27	Z6	R220	T202	L1	NEBEZPEC.TEPLOTA-1.ST.	KON ZAC	22	27	0	39	75	PV	SI	R/C	Y	R/C	Y	1	N	N		R/C	N	Y	N	N	N	
28	D6	R220	T202	L1	NEBEZP.HLAD.OLEJ-NADOBA	KON ZAC	22	27	0	39	75	PV	SI	R/C	Y	R/C	Y	1	N	N		R/C	N	Y	N	N	N	
29	Z4	R220	T202	L1	NEBEZP.HLAD.OLEJ-REGULATOR	KON ZAC	22	27	0	39	75	PV	SI	R/C	Y	R/C	Y	1	N	N		R/C	N	Y	N	N	N	
30	D4	R220	T202	L1	NEBEZP.HLAD.OLEJ-PRIECHODKA	KON ZAC	22	27	0	39	75	PV	SI	R/C	Y	R/C	Y	1	N	N		R/C	N	Y	N	N	N	
31	Z2	R220	T202	L1	MAXIM. TLAK OLEJA	KON ZAC	22	27	0	39	75	PV	SI	R/C	Y	R/C	Y	1	N	N		R/C	N	Y	N	N	N	
32	D2	R220	T202	L1	MINIM. TLAK OLEJA	KON ZAC	22	27	0	39	75	PV	SI	R/C	Y	R/C	Y	1	N	N		R/C	N	Y	N	N	N	

Documentation structur: Standard
Source file: KO050722.ODA

Date	22.07.2005	VSZ KOSICE	SIEMENS AG ISATOOLS	Substation control system 6MB	T = /BD 36
Drawn	LANG			Digital input module:	+
Appr.				Input assignment	-S103 Page 36
Rev.	Remarks	Date	Name Norm	Orig./Repl. 1/Repl. by	Table

Station: UW KOSICE
Device: D02 EAG
Module: DE02
Number: 2

Input	Connect designation	Command derivation	Indication derivation	Remote transmission FP: Master station	Remote transmission FP: Name of telegram	Remote transmission FP: Name of info element
1	Z32		VERTEILER TRAFOSTUFEN T202	IEC 870-5-101	Meldungstelegramm Trafostufen	2010
2	D32		VERTEILER TRAFOSTUFEN T202	IEC 870-5-101	Meldungstelegramm Trafostufen	2010
3	Z30		VERTEILER TRAFOSTUFEN T202	IEC 870-5-101	Meldungstelegramm Trafostufen	2010
4	D30		VERTEILER TRAFOSTUFEN T202	IEC 870-5-101	Meldungstelegramm Trafostufen	2010
5	Z28		VERTEILER TRAFOSTUFEN T202	IEC 870-5-101	Meldungstelegramm Trafostufen	2010
6	D28		VERTEILER TRAFOSTUFEN T202	IEC 870-5-101	Meldungstelegramm Trafostufen	2010
7	Z26		VERTEILER TRAFOSTUFEN T202	IEC 870-5-101	Meldungstelegramm Trafostufen	2010
8	D26		VERTEILER TRAFOSTUFEN T202	IEC 870-5-101	Meldungstelegramm Trafostufen	2010
9	Z24		VERTEILER TRAFOSTUFEN T202	IEC 870-5-101	Meldungstelegramm Trafostufen	2011
10	D24		VERTEILER TRAFOSTUFEN T202	IEC 870-5-101	Meldungstelegramm Trafostufen	2011
11	Z22		VERTEILER TRAFOSTUFEN T202	IEC 870-5-101	Meldungstelegramm Trafostufen	2011
12	D22		VERTEILER TRAFOSTUFEN T202	IEC 870-5-101	Meldungstelegramm Trafostufen	2011
13	Z20		VERTEILER TRAFOSTUFEN T202	IEC 870-5-101	Meldungstelegramm Trafostufen	2011
14	D20		VERTEILER TRAFOSTUFEN T202	IEC 870-5-101	Meldungstelegramm Trafostufen	2011
15	Z18		VERTEILER TRAFOSTUFEN T202	IEC 870-5-101	Meldungstelegramm Trafostufen	2011
16	D18		VERTEILER TRAFOSTUFEN T202	IEC 870-5-101	Meldungstelegramm Trafostufen	2011
17	Z16		VERTEILER TRAFOSTUFEN T202	IEC 870-5-101	Meldungstelegramm Trafostufen	2012
18	D16		VERTEILER TRAFOSTUFEN T202	IEC 870-5-101	Meldungstelegramm Trafostufen	2012
19	Z14		VERTEILER TRAFOSTUFEN T202	IEC 870-5-101	Meldungstelegramm Trafostufen	2012
20	D14		VERTEILER TRAFOSTUFEN T202	IEC 870-5-101	Meldungstelegramm Trafostufen	2012
21	Z12		VERTEILER TRAFOSTUFEN T202	IEC 870-5-101	Meldungstelegramm Trafostufen	2012
22	D12		VERTEILER TRAFOSTUFEN T202	IEC 870-5-101	Meldungstelegramm Trafostufen	2012
23	Z10		VERTEILER TRAFOSTUFEN T202	IEC 870-5-101	Meldungstelegramm Trafostufen	2012
24	D10		VERTEILER TRAFOSTUFEN T202	IEC 870-5-101	Meldungstelegramm Trafostufen	2012
25	Z8	Alarm 1 (Hupenbefehl)				
26	D8	Alarm 1 (Hupenbefehl)				
27	Z6	Alarm 1 (Hupenbefehl)				
28	D6	Alarm 1 (Hupenbefehl)				
29	Z4	Alarm 1 (Hupenbefehl)				
30	D4	Alarm 1 (Hupenbefehl)				
31	Z2	Alarm 1 (Hupenbefehl)				
32	D2	Alarm 1 (Hupenbefehl)				

Proprietary data, company confidential. All rights reserved.
Confie a titre de secret d'entreprise. Tous droits r,serv,s.
Comunicado como segredo empresarial. Reservados todos os direitos.
Confiado como secreto industrial. Nos reservamos todos los derechos.
The reproduction, transmission or use of this document or its is not permitted without expres written authority.
Offenders will be liable for damages. All rights, including rights created by patent grant or registration of a utility model or design, are reserved

Documentation structur: Standard
Source file: KO050722.ODA

			Date	22.07.2005	VSZ KOSICE	SIEMENS AG ISA TOOLS	Substation control system 6MB
			Drawn	LANG			Digital input module:
			Appr.				Input assignment
R	Remarks	Date	Name	Norm	Orig./Repl. 1/Repl. by		Table

T = /BD 37
+
-S103
Page

Station: UW KOSICE
Device: D02 EAG
Module: DE02
Number: 2

Input	Connect designation	Section	Bay	Logical device	Lower limit	Bit pattern length	Tap position coding	Number of tap positions	Tap jump for tap com.	Filtering of norm. setting	With tap changer
1	Z32	R220	T202	L1 TRAFO	ODBOCKA ST.C.	08 bits	No standard code	19	1	N	Y
2	D32	R220	T202	L1 TRAFO	ODBOCKA ST.C.	08 bits	No standard code	19	1	N	Y
3	Z30	R220	T202	L1 TRAFO	ODBOCKA ST.C.	08 bits	No standard code	19	1	N	Y
4	D30	R220	T202	L1 TRAFO	ODBOCKA ST.C.	08 bits	No standard code	19	1	N	Y
5	Z28	R220	T202	L1 TRAFO	ODBOCKA ST.C.	08 bits	No standard code	19	1	N	Y
6	D28	R220	T202	L1 TRAFO	ODBOCKA ST.C.	08 bits	No standard code	19	1	N	Y
7	Z26	R220	T202	L1 TRAFO	ODBOCKA ST.C.	08 bits	No standard code	19	1	N	Y
8	D26	R220	T202	L1 TRAFO	ODBOCKA ST.C.	08 bits	No standard code	19	1	N	Y
9	Z24	R220	T202	L2 TRAFO	ODBOCKA ST.C.	08 bits	No standard code	19	1	N	Y
10	D24	R220	T202	L2 TRAFO	ODBOCKA ST.C.	08 bits	No standard code	19	1	N	Y
11	Z22	R220	T202	L2 TRAFO	ODBOCKA ST.C.	08 bits	No standard code	19	1	N	Y
12	D22	R220	T202	L2 TRAFO	ODBOCKA ST.C.	08 bits	No standard code	19	1	N	Y
13	Z20	R220	T202	L2 TRAFO	ODBOCKA ST.C.	08 bits	No standard code	19	1	N	Y
14	D20	R220	T202	L2 TRAFO	ODBOCKA ST.C.	08 bits	No standard code	19	1	N	Y
15	Z18	R220	T202	L2 TRAFO	ODBOCKA ST.C.	08 bits	No standard code	19	1	N	Y
16	D18	R220	T202	L2 TRAFO	ODBOCKA ST.C.	08 bits	No standard code	19	1	N	Y
17	Z16	R220	T202	L3 TRAFO	ODBOCKA ST.C.	08 bits	No standard code	19	1	N	Y
18	D16	R220	T202	L3 TRAFO	ODBOCKA ST.C.	08 bits	No standard code	19	1	N	Y
19	Z14	R220	T202	L3 TRAFO	ODBOCKA ST.C.	08 bits	No standard code	19	1	N	Y
20	D14	R220	T202	L3 TRAFO	ODBOCKA ST.C.	08 bits	No standard code	19	1	N	Y
21	Z12	R220	T202	L3 TRAFO	ODBOCKA ST.C.	08 bits	No standard code	19	1	N	Y
22	D12	R220	T202	L3 TRAFO	ODBOCKA ST.C.	08 bits	No standard code	19	1	N	Y
23	Z10	R220	T202	L3 TRAFO	ODBOCKA ST.C.	08 bits	No standard code	19	1	N	Y
24	D10	R220	T202	L3 TRAFO	ODBOCKA ST.C.	08 bits	No standard code	19	1	N	Y

Proprietary data, company confidential. All rights reserved.
Confie a tire de secret d'entreprise. Tous droits reservis.
Comunicado como segredo empresarial. Reservados todos os direitos.
Confiado como secreto industrial. Nos reservamos todos los derechos.
The reproduction, transmission or use of this document or its contents is not permitted without express written authority. Offenders will be liable for damages. All rights, including rights created by patent grant or registration of a utility model or design, are reserved.

Documentation structure: Standard
Source file: KO050722.ODA

Rev.	Remarks	Date	Name	Norm

Date 22.07.2005
Drawn LANG
Appr.

VSZ KOSICE
Orig./Repl. 1/Repl. by

SIEMENS AG
ISAOOLS

Substation control system 6MB
Digital input module:
Additional information for tap positions
Table

T = /BD 38
+
-S103
Page 38

Proprietary data, company confidential. All rights reserved
Confia a ltra de secret d'entreprise. Tous droits r,serv,s.
Comunicado como segredo empresarial. Reservados todos os direitos.
Confiado como secreto industrial. Nos reservamos todos los derechos.

The reproduction, transmission or use of this document or its contents is not permitted without express written authority. Offenders will be liable for damages. All rights, including rights created by patent grant or registration of a utility model or design, are reserved.

Station: UW KOSICE
Device: D02 EAG
Module: DE03
Number: 3

Input	Connect designation	Section	Bay	Logical device	Lower limit	Value text	Column section	Column bay	Column logical device	Column information	Column value text	With command	Indication type	Entry in event list	Entry in alarm list	Acknowledge	Display in indication area	Indication class	Entry in SML	Display in diagram	Acknowledge	Display under voltage level	Archive	Operational indications	Protection indications	Filt. of raised & cleared	Bay blockage	Monitored as feedback
1	Z32	R220	T202	L2	BUCHHOLZ NADOBA-VYSTR.1.ST.	KON ZAC	22	27	0	39	75	PV	SI	R/C	Y	R/C	Y	1	N	N			R/C	N	Y	N	N	N
2	D32	R220	T202	L2	BUCHHOLZ NADOBA-VYSTR.2.ST.	KON ZAC	22	27	0	39	75	PV	SI	R/C	Y	R/C	Y	1	N	N			R/C	N	Y	N	N	N
3	Z30	R220	T202	L2	NEBEZPEC.TEPLOTA-1.ST.	KON ZAC	22	27	0	39	75	PV	SI	R/C	Y	R/C	Y	1	N	N			R/C	N	Y	N	N	N
4	D30	R220	T202	L2	NEBEZP.HLAD.OLEJ-NADOBA	KON ZAC	22	27	0	39	75	PV	SI	R/C	Y	R/C	Y	1	N	N			R/C	N	Y	N	N	N
5	Z28	R220	T202	L2	NEBEZP.HLAD.OLEJ-REGULATOR	KON ZAC	22	27	0	39	75	PV	SI	R/C	Y	R/C	Y	1	N	N			R/C	N	Y	N	N	N
6	D28	R220	T202	L2	NEBEZP.HLAD.OLEJ-PRIECHODKA	KON ZAC	22	27	0	39	75	PV	SI	R/C	Y	R/C	Y	1	N	N			R/C	N	Y	N	N	N
7	Z26	R220	T202	L2	MAXIM. TLAK OLEJA	KON ZAC	22	27	0	39	75	PV	SI	R/C	Y	R/C	Y	1	N	N			R/C	N	Y	N	N	N
8	D26	R220	T202	L2	MINIM. TLAK OLEJA	KON ZAC	22	27	0	39	75	PV	SI	R/C	Y	R/C	Y	1	N	N			R/C	N	Y	N	N	N
9	Z24	R220	T202	L3	BUCHHOLZ NADOBA-VYSTR.1.ST.	KON ZAC	22	27	0	39	75	PV	SI	R/C	Y	R/C	Y	1	N	N			R/C	N	Y	N	N	N
10	D24	R220	T202	L3	BUCHHOLZ NADOBA-VYSTR.2.ST.	KON ZAC	22	27	0	39	75	PV	SI	R/C	Y	R/C	Y	1	N	N			R/C	N	Y	N	N	N
11	Z22	R220	T202	L3	NEBEZPEC.TEPLOTA-1.ST.	KON ZAC	22	27	0	39	75	PV	SI	R/C	Y	R/C	Y	1	N	N			R/C	N	Y	N	N	N
12	D22	R220	T202	L3	NEBEZP.HLAD.OLEJ-NADOBA	KON ZAC	22	27	0	39	75	PV	SI	R/C	Y	R/C	Y	1	N	N			R/C	N	Y	N	N	N
13	Z20	R220	T202	L3	NEBEZP.HLAD.OLEJ-REGULATOR	KON ZAC	22	27	0	39	75	PV	SI	R/C	Y	R/C	Y	1	N	N			R/C	N	Y	N	N	N
14	D20	R220	T202	L3	NEBEZP.HLAD.OLEJ-PRIECHODKA	KON ZAC	22	27	0	39	75	PV	SI	R/C	Y	R/C	Y	1	N	N			R/C	N	Y	N	N	N
15	Z18	R220	T202	L3	MAXIM. TLAK OLEJA	KON ZAC	22	27	0	39	75	PV	SI	R/C	Y	R/C	Y	1	N	N			R/C	N	Y	N	N	N
16	D18	R220	T202	L3	MINIM. TLAK OLEJA	KON ZAC	22	27	0	39	75	PV	SI	R/C	Y	R/C	Y	1	N	N			R/C	N	Y	N	N	N
17	Z16	R220	T202	L1	BUCHHOLZ REGULATOR-VYPNUTIE	KON ZAC	22	27	0	39	75	PV	TR	O	Y	O	Y	1	N	N			R	N	Y		N	N
18	D16	R220	T202	L2	BUCHHOLZ REGULATOR-VYPNUTIE	KON ZAC	22	27	0	39	75	PV	TR	O	Y	O	Y	1	N	N			R	N	Y		N	N
19	Z14	R220	T202	L3	BUCHHOLZ REGULATOR-VYPNUTIE	KON ZAC	22	27	0	39	75	PV	TR	O	Y	O	Y	1	N	N			R	N	Y		N	N
20	D14	R220	T202	L1	BUCHHOLZ NADOBA-VYPNUTIE	KON ZAC	22	27	0	39	75	PV	TR	O	Y	O	Y	1	N	N			R	N	Y		N	N
21	Z12	R220	T202	L2	BUCHHOLZ NADOBA-VYPNUTIE	KON ZAC	22	27	0	39	75	PV	TR	O	Y	O	Y	1	N	N			R	N	Y		N	N
22	D12	R220	T202	L3	BUCHHOLZ NADOBA-VYPNUTIE	KON ZAC	22	27	0	39	75	PV	TR	O	Y	O	Y	1	N	N			R	N	Y		N	N
23	Z10	R220	T202	L1	NEBEZPEC.TEPLOTA-2.ST.	KON ZAC	22	27	0	39	75	PV	SI	R/C	Y	R/C	Y	1	N	N			R/C	N	Y	N	N	N
24	D10	R220	T202	L2	NEBEZPEC.TEPLOTA-2.ST.	KON ZAC	22	27	0	39	75	PV	SI	R/C	Y	R/C	Y	1	N	N			R/C	N	Y	N	N	N
25	Z8	R220	T202	L3	NEBEZPEC.TEPLOTA-2.ST.	KON ZAC	22	27	0	39	75	PV	SI	R/C	Y	R/C	Y	1	N	N			R/C	N	Y	N	N	N
26	D8	R220	T202	L1	BEH REGULACIE VO FAZE L1	KON ZAC	22	27	0	39	75	PV	SI	R/C	N				N	Y	N	N	R/C	Y	N	N	N	N
27	Z6	R220	T202	L2	BEH REGULACIE VO FAZE L2	KON ZAC	22	27	0	39	75	PV	SI	R/C	N				N	Y	N	N	R/C	Y	N	N	N	N
28	D6	R220	T202	L3	BEH REGULACIE VO FAZE L3	KON ZAC	22	27	0	39	75	PV	SI	R/C	N				N	Y	N	N	R/C	Y	N	N	N	N
29	Z4																											
30	D4																											
31	Z2																											
32	D2																											

Documentation structur: Standard
Source file: KO050722.ODA

Date	22.07.2005	VSZ KOSICE	SIEMENS AG ISATOOLS
Drawn	LANG		
Appr.			
Remarks	Date	Name Norm	Orig./Repl. 1/Repl. by

Substation control system 6MB
Digital input module:
Input assignment
Table

T = /BD 39
+
-S103
Page

Station: UW KOSICE
Device: D02 EAG
Module: DE03
Number: 3

Input	Connect designation	Command derivation
1	Z32	Alarm 1 (Hupenbefehl)
2	D32	Alarm 1 (Hupenbefehl)
3	Z30	Alarm 1 (Hupenbefehl)
4	D30	Alarm 1 (Hupenbefehl)
5	Z28	Alarm 1 (Hupenbefehl)
6	D28	Alarm 1 (Hupenbefehl)
7	Z26	Alarm 1 (Hupenbefehl)
8	D26	Alarm 1 (Hupenbefehl)
9	Z24	Alarm 1 (Hupenbefehl)
10	D24	Alarm 1 (Hupenbefehl)
11	Z22	Alarm 1 (Hupenbefehl)
12	D22	Alarm 1 (Hupenbefehl)
13	Z20	Alarm 1 (Hupenbefehl)
14	D20	Alarm 1 (Hupenbefehl)
15	Z18	Alarm 1 (Hupenbefehl)
16	D18	Alarm 1 (Hupenbefehl)
17	Z16	Alarm 1 (Hupenbefehl)
18	D16	Alarm 1 (Hupenbefehl)
19	Z14	Alarm 1 (Hupenbefehl)
20	D14	Alarm 1 (Hupenbefehl)
21	Z12	Alarm 1 (Hupenbefehl)
22	D12	Alarm 1 (Hupenbefehl)
23	Z10	Alarm 1 (Hupenbefehl)
24	D10	Alarm 1 (Hupenbefehl)
25	Z8	Alarm 1 (Hupenbefehl)
26	D8	
27	Z6	
28	D6	
29	Z4	
30	D4	
31	Z2	
32	D2	

Proprietary data, company confidential. All rights reserved
Confie a titre de secret d'entreprise. Tous droits reservs.
Comunicado como segredo empresarial. Reservados todos os direitos.
Confiado como secreto industrial. Nos reservamos todos los derechos.
The reproduction, transmission or use of this document or its
is not permitted without expres written authority.
Offenders will be liable for damages. All rights, including rights
created by patent grant or registration of a utility model or design, are reserved.

Documentation structur: Standard
Source file: KO050722.ODA

Rev.	Remarks	Date	Name	Norm
			Date	22.07.2005
			Drawn	LANG
			Appr.	

VSZ
KOSICE

Orig./Repl. 1/Repl. by

SIEMENS AG
ISAOOLS

Substation control system 6MB
Digital input module:
Input assignment
Table

T = /BD 40
+
-S103
Page 40

Station: UW KOSICE
Device: D02 EAG
Module: DE04
Number: 4

Input	Connect designation	Section	Bay	Logical device	Lower limit	Value text	Column section	Column bay	Column logical device	Column information	Column value text	With command	Indication type	Entry in event list	Entry in alarm list	Acknowledge	Display in indication area	Indication class	Entry in SML	Display in diagram	Acknowledge	Display under voltage level	Indication class	Archive	Operational indications	Protection indications	Filt. of raised & cleared	Bay blockage
1	Z32	R220	T202	Q	BUCHHOLZ REGULATOR-VYPNUTIE	KON ZAC	22	27	0	39	75	PV	TR	O	Y	O	Y	1	N	N				R	N	Y		N
2	D32	R220	T202	Q	BUCHHOLZ NADOBA-VYPNUTIE	KON ZAC	22	27	0	39	75	PV	TR	O	Y	O	Y	1	N	N				R	N	Y		N
3	Z30	R220	T202	Q	NEBEZPEC.TEPLOTA-2.ST.	KON ZAC	22	27	0	39	75	PV	SI	R/C	Y	R/C	Y	1	N	N				R/C	N	Y	N	N
4	D30	R220	T202	Q	BUCHHOLZ NADOBA-VYSTR.1.ST.	KON ZAC	22	27	0	39	75	PV	SI	R/C	Y	R/C	Y	1	N	N				R/C	N	Y	N	N
5	Z28	R220	T202	Q	BUCHHOLZ NADOBA-VYSTR.2.ST.	KON ZAC	22	27	0	39	75	PV	SI	R/C	Y	R/C	Y	1	N	N				R/C	N	Y	N	N
6	D28																											
7	Z26	R220	T202	Q	NEBEZPEC.TEPLOTA-1.ST.	KON ZAC	22	27	0	39	75	PV	SI	R/C	Y	R/C	Y	1	N	N				R/C	N	Y	N	N
8	D26	R220	T202	Q	NEBEZP.HLAD.OLEJ-NADOBA	KON ZAC	22	27	0	39	75	PV	SI	R/C	Y	R/C	Y	1	N	N				R/C	N	Y	N	N
9	Z24	R220	T202	Q	NEBEZP.HLAD.OLEJ-REGULATOR	KON ZAC	22	27	0	39	75	PV	SI	R/C	Y	R/C	Y	1	N	N				R/C	N	Y	N	N
10	D24	R220	T202	Q	NEBEZP.HLAD.OLEJ-PRIECHODKA	KON ZAC	22	27	0	39	75	PV	SI	R/C	Y	R/C	Y	1	N	N				R/C	N	Y	N	N
11	Z22	R220	T202	Q	MAXIM. TLAK OLEJA	KON ZAC	22	27	0	39	75	PV	SI	R/C	Y	R/C	Y	1	N	N				R/C	N	Y	N	N
12	D22	R220	T202	Q	MINIM. TLAK OLEJA	KON ZAC	22	27	0	39	75	PV	SI	R/C	Y	R/C	Y	1	N	N				R/C	N	Y	N	N
13	Z20	R220	T202	Q	PORUCHA VENTILATORA 1	KON ZAC	22	27	0	39	75	PV	SI	R/C	N				N	Y	O	Y	1	R/C	Y	N	N	N
14	D20	R220	T202	Q	PORUCHA VENTILATORA 2	KON ZAC	22	27	0	39	75	PV	SI	R/C	N				N	Y	O	Y	1	R/C	Y	N	N	N
15	Z18	R220	T202	Q	PORUCHA VENTILATORA 3	KON ZAC	22	27	0	39	75	PV	SI	R/C	N				N	Y	O	Y	1	R/C	Y	N	N	N
16	D18	R220	T202	Q	PORUCHA VENTILATORA 4	KON ZAC	22	27	0	39	75	PV	SI	R/C	N				N	Y	O	Y	1	R/C	Y	N	N	N
17	Z16	R220	T202	Q	PORUCHA CERPADLA 1	KON ZAC	22	27	0	39	75	PV	SI	R/C	N				N	Y	O	Y	1	R/C	Y	N	N	N
18	D16	R220	T202	Q	PORUCHA CERPADLA 2	KON ZAC	22	27	0	39	75	PV	SI	R/C	N				N	Y	O	Y	1	R/C	Y	N	N	N
19	Z14																											
20	D14	R220	T202	Q	BEH REGULACIE V REZERV.JEDN.	KON ZAC	22	27	0	39	75	PV	SI	R/C	N				N	Y	N	N		R/C	Y	N	N	N
21	Z12	R220		rm24	STRATA 380V,50Hz rm24.14.2	KON ZAC	22	27	0	39	75	PV	SI	R/C	N				N	N				R/C	Y	N	N	N
22	D12	R220	T201	rm24	VYP ISTICA NAPAJANIA REGUL	KON ZAC	22	27	0	39	75	PV	SI	R/C	N				N	N				R/C	Y	N	N	N
23	Z10	R220	T202	rm24	VYP ISTICA NAPAJANIA REGUL	KON ZAC	22	27	0	39	75	PV	SI	R/C	N				N	N				R/C	Y	N	N	N
24	D10																											
25	Z8	R220	T202	Q	TRAFO ODBOCKA ST.C.		22	27	0	38				O						Y	N			N				N
26	D8	R220	T202	Q	TRAFO ODBOCKA ST.C.		22	27	0	38				O						Y	N			N				N
27	Z6	R220	T202	Q	TRAFO ODBOCKA ST.C.		22	27	0	38				O						Y	N			N				N
28	D6	R220	T202	Q	TRAFO ODBOCKA ST.C.		22	27	0	38				O						Y	N			N				N
29	Z4	R220	T202	Q	TRAFO ODBOCKA ST.C.		22	27	0	38				O						Y	N			N				N
30	D4	R220	T202	Q	TRAFO ODBOCKA ST.C.		22	27	0	38				O						Y	N			N				N
31	Z2	R220	T202	Q	TRAFO ODBOCKA ST.C.		22	27	0	38				O						Y	N			N				N
32	D2	R220	T202	Q	TRAFO ODBOCKA ST.C.		22	27	0	38				O						Y	N			N				N

Proprietary data, company confidential. All rights reserved.
Confia a tire da secret d'entreprise. Tous droits r.serv.s.
Comunicado como segredo empresarial. Reservados todos os direitos.
Confiado como secreto industrial. Nos reservamos todos los derechos.
The reproduction, transmission or use of this document or its contents is not permitted without express written authority. Offenders will be liable for damages. All rights, including rights created by patent grant or registration of a utility model or design, are reserved.

Documentation structur: Standard
Source file: KO050722.ODA

Date	22.07.2005	VSZ KOSICE	SIEMENS AG ISATOOLS
Drawn	LANG		
Appr.			
Remarks	Date	Name Norm	Orig./Repl. 1/Repl. by

Substation control system 6MB
Digital input module:
Input assignment
Table

T = /BD 41
+
-S103
Page

Station: UW KOSICE
Device: D02 EAG
Module: DE04
Number: 4

Input	Connect designation	Monitored as feedback	Checkback monit. time in s	Command derivation	Indication derivation	Remote transmission FP: Master station	Remote transmission FP: Name of telegram	Remote transmission FP: Name of info element
1	Z32	N		Alarm 1 (Hupenbefehl)				
2	D32	N		Alarm 1 (Hupenbefehl)				
3	Z30	N		Alarm 1 (Hupenbefehl)				
4	D30	N		Alarm 1 (Hupenbefehl)				
5	Z28	N		Alarm 1 (Hupenbefehl)				
6	D28							
7	Z26	N		Alarm 1 (Hupenbefehl)				
8	D26	N		Alarm 1 (Hupenbefehl)				
9	Z24	N		Alarm 1 (Hupenbefehl)				
10	D24	N		Alarm 1 (Hupenbefehl)				
11	Z22	N		Alarm 1 (Hupenbefehl)				
12	D22	N		Alarm 1 (Hupenbefehl)				
13	Z20	N						
14	D20	N						
15	Z18	N						
16	D18	N						
17	Z16	N						
18	D16	N						
19	Z14							
20	D14	N						
21	Z12	N						
22	D12	N						
23	Z10	N						
24	D10							
25	Z8	Y	20.0		VERTEILER TRAFOSTUFEN T202	IEC 870-5-101	Meldungstelegramm Trafostufen	2013
26	D8	Y	20.0		VERTEILER TRAFOSTUFEN T202	IEC 870-5-101	Meldungstelegramm Trafostufen	2013
27	Z6	Y	20.0		VERTEILER TRAFOSTUFEN T202	IEC 870-5-101	Meldungstelegramm Trafostufen	2013
28	D6	Y	20.0		VERTEILER TRAFOSTUFEN T202	IEC 870-5-101	Meldungstelegramm Trafostufen	2013
29	Z4	Y	20.0		VERTEILER TRAFOSTUFEN T202	IEC 870-5-101	Meldungstelegramm Trafostufen	2013
30	D4	Y	20.0		VERTEILER TRAFOSTUFEN T202	IEC 870-5-101	Meldungstelegramm Trafostufen	2013
31	Z2	Y	20.0		VERTEILER TRAFOSTUFEN T202	IEC 870-5-101	Meldungstelegramm Trafostufen	2013
32	D2	Y	20.0		VERTEILER TRAFOSTUFEN T202	IEC 870-5-101	Meldungstelegramm Trafostufen	2013

Proprietary data, company confidential. All rights reserved
Confie a titre de secret d'entreprise. Tous droits reservés.
Comunicado como segredo empresarial. Reservados todos os direitos.
Confiado como secreto industrial. Nos reservamos todos los derechos.
The reproduction, transmission or use of this document or its is not permitted without express written authority.
Offenders will be liable for damages. All rights, including rights created by patent grant or registration of a utility model or design, are reserved

Documentation structur: Standard
Source file: KO050722.ODA

Rev.	Remarks	Date	Name	Date	22.07.2005	VSZ KOSICE	SIEMENS AG ISAOOLS	Substation control system 6MB
				Drawn	LANG			Digital input module:
				Appr.				Input assignment
				Norm		Orig./Repl. 1/Repl. by		Table

T = /BD 42
+
-S103
Page 42

Station: UW KOSICE
Device: D02 EAG
Module: DE04
Number: 4

Input	Connect designation	Section	Bay	Logical device	Lower limit	Bit pattern length	Tap position coding	Number of tap positions	Tap jump for tap com.	Filtering of norm. setting	With tap changer
25	Z8	R220	T202	Q TRAFO	ODBOCKA ST.C.	)8 bits	No standard code	19	1	N	Y
26	D8	R220	T202	Q TRAFO	ODBOCKA ST.C.	)8 bits	No standard code	19	1	N	Y
27	Z6	R220	T202	Q TRAFO	ODBOCKA ST.C.	)8 bits	No standard code	19	1	N	Y
28	D6	R220	T202	Q TRAFO	ODBOCKA ST.C.	)8 bits	No standard code	19	1	N	Y
29	Z4	R220	T202	Q TRAFO	ODBOCKA ST.C.	)8 bits	No standard code	19	1	N	Y
30	D4	R220	T202	Q TRAFO	ODBOCKA ST.C.	)8 bits	No standard code	19	1	N	Y
31	Z2	R220	T202	Q TRAFO	ODBOCKA ST.C.	)8 bits	No standard code	19	1	N	Y
32	D2	R220	T202	Q TRAFO	ODBOCKA ST.C.	)8 bits	No standard code	19	1	N	Y

Proprietary data, company confidential. All rights reserved.
Confie a titre de secret d'entreprise. Tous droits réservés.
Comunicado como segredo empresarial. Reservados todos os direitos.
Confiado como secreto industrial. Nos reservamos todos los derechos.
The reproduction, transmission or use of this document or its is not permitted without expres written authority.
Offenders will be liable for damages. All rights, including rights created by patent grant or registration of a utility model or design, are reserved.

Documentation structur: Standard
Source file: KO050722.ODA

			Date	22.07.2005	VSZ KOSICE	SIEMENS AG ISAOOLS	Substation control system 6MB
			Drawn	LANG			Digital input module:
			Appr.				Additional information for tap position
R	Remarks	Date	Name	Norm	Orig./Repl. 1/Repl. by		Table

T = /BD 43
+
-S103
Page

Device: D02 EAG
Module: LT
Packet no.: 8
Version no.: 1

Connect. with:

Device	Subrack	Module	Connection SKA:	UART	Multiplexer
LZG	LZG-BGT	AST 2	D17/7	2	15

Proprietary data, company confidential. All rights reserved.
Confie a titre de secret d'entreprise. Tous droits réservés.
Comunicado como segredo empresarial. Reservados todos os direitos.
Confiado como secreto industrial. Nos reservamos todos los derechos.

The reproduction, transmission or use of this document or its is not permitted without express written authority.
Offenders will be liable for damages. All rights, including rights created by patent grant or registration of a utility model or design, are reserved.

Documentation structur: Standard
Source file: KO050722.ODA

Rev.	Remarks	Date	Name	Date	22.07.2005	VSZ KOSICE	SIEMENS AG ISA TOOLS	Substation control system 6MB Processor module for control	T = /BD 44
				Drawn	LANG				+
				Appr.					-S103 Page 44
				Norm		Orig./Repl. 1/Repl. by		Table	

Station: UW KOSICE
Device: EA01 EAG/3
Module: BM01
Number: 1

With mcb: No
Last input with: Freely marshalable

Input	Connect designation	Section	Bay	Logical device	Lower limit	Value text	Column section	Column bay	Column logical device	Column information	Column value text	With command	Indication type	Entry in event list	Entry in alarm list	Entry in SML	Display in diagram	Archive	Operational indications	Protection indications	Filt. of raised & cleared	Bay blockage	Monitored as feedback	Checkback monit. time in s
1	BIT 0	R110	EA03		NAPATIE PRE SYNCHRONIZ.	KON ZAC	22	27	0	39	75	LZM	SI	R/C	N	N	N	R/C	Y	N	N	N	Y	10.0
2	BIT 1	R110	EA07		NAPATIE PRE SYNCHRONIZ.	KON ZAC	22	27	0	39	75	LZM	SI	R/C	N	N	N	R/C	Y	N	N	N	Y	10.0
3	BIT 2	R110	EA09		NAPATIE PRE SYNCHRONIZ.	KON ZAC	22	27	0	39	75	LZM	SI	R/C	N	N	N	R/C	Y	N	N	N	Y	10.0
4	BIT 3	R110	EA11		NAPATIE PRE SYNCHRONIZ.	KON ZAC	22	27	0	39	75	LZM	SI	R/C	N	N	N	R/C	Y	N	N	N	Y	10.0
5	BIT 4	R110	EA13		NAPATIE PRE SYNCHRONIZ.	KON ZAC	22	27	0	39	75	LZM	SI	R/C	N	N	N	R/C	Y	N	N	N	Y	10.0
6	BIT 5	R110	EA15		NAPATIE PRE SYNCHRONIZ.	KON ZAC	22	27	0	39	75	LZM	SI	R/C	N	N	N	R/C	Y	N	N	N	Y	10.0
7	BIT 6	R110	EA18		NAPATIE PRE SYNCHRONIZ.	KON ZAC	22	27	0	39	75	LZM	SI	R/C	N	N	N	R/C	Y	N	N	N	Y	10.0
8	BIT 7	R110	EA19		NAPATIE PRE SYNCHRONIZ.	KON ZAC	22	27	0	39	75	LZM	SI	R/C	N	N	N	R/C	Y	N	N	N	Y	10.0
9	BIT 8	R110	EA20		NAPATIE PRE SYNCHRONIZ.	KON ZAC	22	27	0	39	75	LZM	SI	R/C	N	N	N	R/C	Y	N	N	N	Y	10.0
10	BIT 9	R110	E W1		NAPATIE PRE SYNCHRONIZ.	KON ZAC	22	27	0	39	75	LZM	SI	R/C	N	N	N	R/C	Y	N	N	N	Y	10.0
11	BIT 10	R110	EA05		NAPATIE PRE SYNCHRONIZ.	KON ZAC	22	27	0	39	75	LZM	SI	R/C	N	N	N	R/C	Y	N	N	N	Y	10.0
12	BIT 11	R110	E W2		NAPATIE PRE SYNCHRONIZ.	KON ZAC	22	27	0	39	75	LZM	SI	R/C	N	N	N	R/C	Y	N	N	N	Y	10.0
13	BIT 12																							
14	BIT 13																							
15	BIT 14																							
16	BIT 15																							

Proprietary data, company confidential. All rights reserved.
Confie a titre de secret d'entreprise. Tous droits réservés.
Comunicado como segredo empresarial. Reservados todos os direitos.
Confiado como secreto industrial. Nos reservamos todos los derechos.

The reproduction, transmission or use of this document or its is not permitted without expres written authority.
Offenders will be liable for damages. All rights, including rights created by patent grant or registration of a utility model or design, are reserved

Documentation structur: Standard
Source file: KO050722.ODA

			Date	22.07.2005	VSZ KOSICE	SIEMENS AG ISA TOOLS	Substation control system 6MB	T = /BD 45
			Drawn	LANG			Command and signalling module:	+
			Appr.				Input assignment	-S103 Page
F	Remarks	Date	Name	Norm	Orig./Repl. 1/Repl. by		Table	

Station: UW KOSICE
Device: EA01 EAG/3
Module: BM01
Number: 1

With mcb: No

Output	Connect designation	Section	Bay	Logical device	Lower limit	Value text	Column section	Column bay	Column logical device	Column information	Column value text	Type of command	Entry in event list	Entry in alarm list	Entry in SML	Display in diag. as select. field	Archive	Operational indications	Protection indications	Checkback via: Device	Module	Input	Checkback monit. time in s	Interlocking type:
1	BIT 0	R110	EA03		NAPATIE PRE SYNCHRONIZ.	KON ZAC	22	27	0	39	75	SC	R/C	N	N	PV	R/C	Y	N	EA01 EAG/3	BM01	1	10.0	SCHALTGERÄT
2	BIT 1	R110	EA07		NAPATIE PRE SYNCHRONIZ.	KON ZAC	22	27	0	39	75	SC	R/C	N	N	PV	R/C	Y	N	EA01 EAG/3	BM01	2	10.0	SCHALTGERÄT
3	BIT 2	R110	EA09		NAPATIE PRE SYNCHRONIZ.	KON ZAC	22	27	0	39	75	SC	R/C	N	N	PV	R/C	Y	N	EA01 EAG/3	BM01	3	10.0	SCHALTGERÄT
4	BIT 3	R110	EA11		NAPATIE PRE SYNCHRONIZ.	KON ZAC	22	27	0	39	75	SC	R/C	N	N	PV	R/C	Y	N	EA01 EAG/3	BM01	4	10.0	SCHALTGERÄT
5	BIT 4	R110	EA13		NAPATIE PRE SYNCHRONIZ.	KON ZAC	22	27	0	39	75	SC	R/C	N	N	PV	R/C	Y	N	EA01 EAG/3	BM01	5	10.0	SCHALTGERÄT
6	BIT 5	R110	EA15		NAPATIE PRE SYNCHRONIZ.	KON ZAC	22	27	0	39	75	SC	R/C	N	N	PV	R/C	Y	N	EA01 EAG/3	BM01	6	10.0	SCHALTGERÄT
7	BIT 6	R110	EA18		NAPATIE PRE SYNCHRONIZ.	KON ZAC	22	27	0	39	75	SC	R/C	N	N	PV	R/C	Y	N	EA01 EAG/3	BM01	7	10.0	SCHALTGERÄT
8	BIT 7	R110	EA19		NAPATIE PRE SYNCHRONIZ.	KON ZAC	22	27	0	39	75	SC	R/C	N	N	PV	R/C	Y	N	EA01 EAG/3	BM01	8	10.0	SCHALTGERÄT
9	BIT 8	R110	EA20		NAPATIE PRE SYNCHRONIZ.	KON ZAC	22	27	0	39	75	SC	R/C	N	N	PV	R/C	Y	N	EA01 EAG/3	BM01	9	10.0	SCHALTGERÄT
10	BIT 9	R110	E W1		NAPATIE PRE SYNCHRONIZ.	KON ZAC	22	27	0	39	75	SC	R/C	N	N	PV	R/C	Y	N	EA01 EAG/3	BM01	10	10.0	KEINE VERRIEGELUNG
11	BIT 10	R110	EA05		NAPATIE PRE SYNCHRONIZ.	KON ZAC	22	27	0	39	75	SC	R/C	N	N	PV	R/C	Y	N	EA01 EAG/3	BM01	11	10.0	SCHALTGERÄT
12	BIT 11	R110	E W2		NAPATIE PRE SYNCHRONIZ.	KON ZAC	22	27	0	39	75	SC	R/C	N	N	PV	R/C	Y	N	EA01 EAG/3	BM01	12	10.0	KEINE VERRIEGELUNG
14	BIT 12															PV								
15	BIT 13															PV								

Proprietary data, company confidential. All rights reserved.
Confie a titre de secret d'entreprise. Tous droits réservés.
Comunicado como segredo empresarial. Reservados todos os direitos.
Confiado como secreto industrial. Nos reservamos todos los derechos.

The reproduction, transmission or use of this document or its is not permitted without expres written authority.
Offenders will be liable for damages. All rights, including rights created by patent grant or registration of a utility model or design, are reserved

Documentation structur: Standard
Source file: KO050722.ODA

Rev.	Remarks	Date	Name	Date	22.07.2005	VSZ KOSICE	SIEMENS AG ISAOOLS	Substation control system 6MB
				Drawn	LANG			Command and signalling module:
				Appr.				Commands
				Norm		Orig./Repl. 1/Repl. by		Table

T = /BD 46
+
-S103
Page 46

Station: UW KOSICE
Device: EA01 EAG/3
Module: BM02
Number: 2

With mcb: No
Last input with: Freely marshalable

Input	Connect designation	Section	Bay	Logical device	Lower limit	Value text	Column section	Column bay	Column logical device	Column information	Column value text	With command	Indication type	Entry in event list	Entry in SML	Display in diagram	Display of intermed. pos.	Acknowledge	Display under voltage level	Indication class	Archive	Operational indications	Protection indications	Filtering of intermed. pos.	Bay blockage	Monitored as feedback	Checkback monit. time in s
1	B22	R110	EA03	VYPINAC Q0	SCHALTZUSTAND	vyp.	22	27	39	0	75	LZM	DI	O	N	Y	N	O	Y	2	R	Y	N	N	N	Y	62.0
2	Z22	R110	EA03	VYPINAC Q0	SCHALTZUSTAND	zap.	22	27	39	0	75	LZM	DI	O	N	Y	N	O	Y	2	R	Y	N	N	N	Y	62.0
3	D24	R110	EA07	VYPINAC Q0	SCHALTZUSTAND	vyp.	22	27	39	0	75	LZM	DI	O	N	Y	N	O	Y	2	R	Y	N	N	N	Y	62.0
4	B24	R110	EA07	VYPINAC Q0	SCHALTZUSTAND	zap.	22	27	39	0	75	LZM	DI	O	N	Y	N	O	Y	2	R	Y	N	N	N	Y	62.0
5	Z24	R110	EA09	VYPINAC Q0	SCHALTZUSTAND	vyp.	22	27	39	0	75	LZM	DI	O	N	Y	N	O	Y	2	R	Y	N	N	N	Y	62.0
6	D26	R110	EA09	VYPINAC Q0	SCHALTZUSTAND	zap.	22	27	39	0	75	LZM	DI	O	N	Y	N	O	Y	2	R	Y	N	N	N	Y	62.0
7	B26	R110	EA11	VYPINAC Q0	SCHALTZUSTAND	vyp.	22	27	39	0	75	LZM	DI	O	N	Y	N	O	Y	2	R	Y	N	N	N	Y	62.0
8	Z26	R110	EA11	VYPINAC Q0	SCHALTZUSTAND	zap.	22	27	39	0	75	LZM	DI	O	N	Y	N	O	Y	2	R	Y	N	N	N	Y	62.0
9	D28	R110	EA13	VYPINAC Q0	SCHALTZUSTAND	vyp.	22	27	39	0	75	LZM	DI	O	N	Y	N	O	Y	2	R	Y	N	N	N	Y	62.0
10	B28	R110	EA13	VYPINAC Q0	SCHALTZUSTAND	zap.	22	27	39	0	75	LZM	DI	O	N	Y	N	O	Y	2	R	Y	N	N	N	Y	62.0
11	Z28	R110	EA15	VYPINAC Q0	SCHALTZUSTAND	vyp.	22	27	39	0	75	LZM	DI	O	N	Y	N	O	Y	2	R	Y	N	N	N	Y	62.0
12	D30	R110	EA15	VYPINAC Q0	SCHALTZUSTAND	zap.	22	27	39	0	75	LZM	DI	O	N	Y	N	O	Y	2	R	Y	N	N	N	Y	62.0
13	B30	R110	EA18	VYPINAC Q0	SCHALTZUSTAND	vyp.	22	27	39	0	75	LZM	DI	O	N	Y	N	O	Y	2	R	Y	N	N	N	Y	62.0
14	Z30	R110	EA18	VYPINAC Q0	SCHALTZUSTAND	zap.	22	27	39	0	75	LZM	DI	O	N	Y	N	O	Y	2	R	Y	N	N	N	Y	62.0
15	D32	R110	EA19	VYPINAC Q0	SCHALTZUSTAND	vyp.	22	27	39	0	75	LZM	DI	O	N	Y	N	O	Y	2	R	Y	N	N	N	Y	62.0
16	B32	R110	EA19	VYPINAC Q0	SCHALTZUSTAND	zap.	22	27	39	0	75	LZM	DI	O	N	Y	N	O	Y	2	R	Y	N	N	N	Y	62.0

Proprietary data, company confidential. All rights reserved.
Confie a titre de secret d'entreprise. Tous droits reservés.
Comunicado como segredo empresarial. Reservados todos os direitos.
Confiado como secreto industrial. Nos reservamos todos los derechos.

The reproduction, transmission or use of this document or its is not permitted without expres written authority.
Offenders will be liable for damages. All rights, including rights created by patent grant or registration of a utility model or design, are reserved

Documentation structur: Standard
Source file: KO050722.ODA

			Date	22.07.2005	VSZ KOSICE	SIEMENS AG ISAOOLS	Substation control system 6MB
			Drawn	LANG			Command and signalling module:
			Appr.				Input assignment
R	Remarks	Date	Name	Norm	Orig./Repl. 1/Repl. by		Table

T = /BD 47
+
-S103
Page 47

Station: UW KOSICE
Device: EA01 EAG/3
Module: BM02
Number: 2

With mcb: No
Last input with: Freely marshalable

Input	Connect designation	Remote transmission FP: Master station	Name of telegram	Name of info element
1	B22	IEC 870-5-101	Meldungstelegramm DM	320
2	Z22	IEC 870-5-101	Meldungstelegramm DM	320
3	D24	IEC 870-5-101	Meldungstelegramm DM	360
4	B24	IEC 870-5-101	Meldungstelegramm DM	360
5	Z24	IEC 870-5-101	Meldungstelegramm DM	380
6	D26	IEC 870-5-101	Meldungstelegramm DM	380
7	B26	IEC 870-5-101	Meldungstelegramm DM	400
8	Z26	IEC 870-5-101	Meldungstelegramm DM	400
9	D28	IEC 870-5-101	Meldungstelegramm DM	420
10	B28	IEC 870-5-101	Meldungstelegramm DM	420
11	Z28	IEC 870-5-101	Meldungstelegramm DM	430
12	D30	IEC 870-5-101	Meldungstelegramm DM	430
13	B30	IEC 870-5-101	Meldungstelegramm DM	460
14	Z30	IEC 870-5-101	Meldungstelegramm DM	460
15	D32	IEC 870-5-101	Meldungstelegramm DM	470
16	B32	IEC 870-5-101	Meldungstelegramm DM	470

Proprietary data, company confidential. All rights reserved
Confie a titre de secret d'entreprise. Tous droits réservés
Comunicado como segredo empresarial. Reservados todos os direitos.
Confiado como secreto industrial. Nos reservamos todos los derechos.

The reproduction, transmission or use of this document or its is not permitted without expres written authority.
Offenders will be liable for damages. All rights, including rights created by patent grant or registration of a utility model or design, are reserved.

Documentation structur: Standard
Source file: KO050722.ODA

Rev.	Remarks	Date	Name	Date	22.07.2005	VSZ KOSICE	SIEMENS AG ISAOOLS	Substation control system 6MB Command and signalling module: Input assignment Table	T = /BD 48
				Drawn	LANG				+
				Appr.					
				Norm		Orig./Repl. 1/Repl. by			-S103 Page 48

Station: UW KOSICE
Device: EA01 EAG/3
Module: BM02
Number: 2

With mcb: No

Output	Connect designation	Section	Bay	Logical device	Lower limit	Value text	Column section	Column bay	Column logical device	Column information	Column value text	Type of command	Entry in event list	Entry in SML	Display in diag. as select. field	Archive	Operational indications	Protection indications	Overtravel time in s	Checkback via: Device	Module	Input	Checkback monit. time in s	Interlocking type:
1	Z2/Z4	R110	EA03	VYPINAC Q0	SCHALTZUSTAND	vyp.	22	27	39	0	75	DC	O	N	PV	R	Y	N	0.0	EA01 EAG/3	BM02	1	62.0	SCHALTGERÄT
2	D4/B4	R110	EA03	VYPINAC Q0	SCHALTZUSTAND	zap.	22	27	39	0	75	DC	O	N	PV	R	Y	N	0.0	EA01 EAG/3	BM02	1	62.0	SCHALTGERÄT
3	D6/B6	R110	EA07	VYPINAC Q0	SCHALTZUSTAND	vyp.	22	27	39	0	75	DC	O	N	PV	R	Y	N	0.0	EA01 EAG/3	BM02	3	62.0	SCHALTGERÄT
4	Z6/Z8	R110	EA07	VYPINAC Q0	SCHALTZUSTAND	zap.	22	27	39	0	75	DC	O	N	PV	R	Y	N	0.0	EA01 EAG/3	BM02	3	62.0	SCHALTGERÄT
5	D8/B8	R110	EA09	VYPINAC Q0	SCHALTZUSTAND	vyp.	22	27	39	0	75	DC	O	N	PV	R	Y	N	0.0	EA01 EAG/3	BM02	5	62.0	SCHALTGERÄT
6	D10/B10	R110	EA09	VYPINAC Q0	SCHALTZUSTAND	zap.	22	27	39	0	75	DC	O	N	PV	R	Y	N	0.0	EA01 EAG/3	BM02	5	62.0	SCHALTGERÄT
7	Z10/Z12	R110	EA11	VYPINAC Q0	SCHALTZUSTAND	vyp.	22	27	39	0	75	DC	O	N	PV	R	Y	N	0.0	EA01 EAG/3	BM02	7	62.0	SCHALTGERÄT
8	D12/B12	R110	EA11	VYPINAC Q0	SCHALTZUSTAND	zap.	22	27	39	0	75	DC	O	N	PV	R	Y	N	0.0	EA01 EAG/3	BM02	7	62.0	SCHALTGERÄT
9	D14/B14	R110	EA13	VYPINAC Q0	SCHALTZUSTAND	vyp.	22	27	39	0	75	DC	O	N	PV	R	Y	N	0.0	EA01 EAG/3	BM02	9	62.0	SCHALTGERÄT
10	Z14/Z16	R110	EA13	VYPINAC Q0	SCHALTZUSTAND	zap.	22	27	39	0	75	DC	O	N	PV	R	Y	N	0.0	EA01 EAG/3	BM02	9	62.0	SCHALTGERÄT
11	D16/B16														PV									
12	D18/B18														PV									
14	D20/B20														PV									
15	D22/Z20														PV									

Proprietary data, company confidential. All rights reserved.
Confie a titre de secret d'entreprise. Tous droits réservés.
Comunicado como segredo empresarial. Reservados todos os direitos.
Confiado como secreto industrial. Nos reservamos todos los derechos.

The reproduction, transmission or use of this document or its is not permitted without expres written authority.
Offenders will be liable for damages. All rights, including rights created by patent grant or registration of a utility model or design, are reserved

Documentation structur: Standard
Source file: KO050722.ODA

Remarks	Date	Name	Norm	Date	22.07.2005	VSZ KOSICE	SIEMENS AG ISAOOLS	Substation control system 6MB Command and signalling module: Commands Table	T = /BD 49
				Drawn	LANG				+
				Appr.					-S103 Page
				Orig./Repl. 1/Repl. by					

Station: UW KOSICE
Device: EA01 EAG/3
Module: BM02
Number: 2

With mcb: No

Output	Connect designation	Switch interlocking	Remote transmission FP: Master station	Remote transmission FP: Name of telegram	Remote transmission FP: Name of info element
1	Z2/Z4				
2	D4/B4				
3	D6/B6				
4	Z6/Z8				
5	D8/B8				
6	D10/B10				
7	Z10/Z12	SCHALTVERRIEGELUNG FÜR FERNSTEUERUNG	IEC 870-5-101	Befehlstelegramm 007	1793
8	D12/B12	SCHALTVERRIEGELUNG FÜR FERNSTEUERUNG	IEC 870-5-101	Befehlstelegramm 007	1793
9	D14/B14				
10	Z14/Z16				
11	D16/B16				
12	D18/B18				
14	D20/B20				
15	D22/Z20				

Proprietary data, company confidential. All rights reserved.
Confia a tire de secret d'entreprise. Tous droits reservs.
Comunicado como segredo empresarial. Reservados todos os direitos.
Confiado como secreto industrial. Nos reservamos todos los derechos.
The reproduction, transmission or use of this document or its is not permitted without express written authority.
Offenders will be liable for damages. All rights, including rights created by patent grant or registration of a utility model or design, are reserved.

Documentation structur: Standard
Source file: KO050722.ODA

Rev.	Remarks	Date	Name	Norm	Date 22.07.2005	Drawn LANG	Appr.	Orig./Repl. 1/Repl. by

VSZ KOSICE

SIEMENS AG
ISATOOLS

Substation control system 6MB
Command and signalling module:
Commands
Table

T = /BD 50
+
-S103
Page 50

Station: UW KOSICE
Device: EA01 EAG/3
Module: BM03
Number: 3

With mcb: No
Last input with: Freely marshalable

Input	Connect designation	Section	Bay	Logical device	Lower limit	Value text	Column section	Column bay	Column logical device	Column information	Column value text	With command	Indication type	Entry in event list	Entry in SML	Display in diagram	Display of intermed. pos.	Acknowledge	Display under voltage level	Indication class	Archive	Operational indications	Protection indications	Filtering of intermed. pos.	Bay blockage	Monitored as feedback	Checkback monit. time in s
1	B22	R110	EA20	VYPINAC Q0	SCHALTZUSTAND	vyp.	22	27	39	0	75	LZM	DI	O	N	Y	N	O	Y	2	R	Y	N	N	N	Y	62.0
2	Z22	R110	EA20	VYPINAC Q0	SCHALTZUSTAND	zap.	22	27	39	0	75	LZM	DI	O	N	Y	N	O	Y	2	R	Y	N	N	N	Y	62.0
3	D24	R110	EA05	VYPINAC Q0	SCHALTZUSTAND	vyp.	22	27	39	0	75	LZM	DI	O	N	Y	N	O	Y	2	R	Y	N	N	N	Y	62.0
4	B24	R110	EA05	VYPINAC Q0	SCHALTZUSTAND	zap.	22	27	39	0	75	LZM	DI	O	N	Y	N	O	Y	2	R	Y	N	N	N	Y	62.0
5	Z24																										
6	D26																										
7	B26	T201	TERC	VYPINAC Q0	SCHALTZUSTAND	vyp.	22	27	39	0	75	LZM	DI	O	N	Y	N	O	Y	2	R	Y	N	N	N	Y	62.0
8	Z26	T201	TERC	VYPINAC Q0	SCHALTZUSTAND	zap.	22	27	39	0	75	LZM	DI	O	N	Y	N	O	Y	2	R	Y	N	N	N	Y	62.0
9	D28	T202	TERC	VYPINAC Q0	SCHALTZUSTAND	vyp.	22	27	39	0	75	LZM	DI	O	N	Y	N	O	Y	2	R	Y	N	N	N	Y	62.0
10	B28	T202	TERC	VYPINAC Q0	SCHALTZUSTAND	zap.	22	27	39	0	75	LZM	DI	O	N	Y	N	O	Y	2	R	Y	N	N	N	Y	62.0
11	Z28																										
12	D30																										
13	B30																										
14	Z30																										
15	D32																										
16	B32																										

Proprietary data, company confidential. All rights reserved.
Confie a titre de secret d'entreprise. Tous droits réservés.
Comunicado como segredo empresarial. Reservados todos os direitos.
Confiado como secreto industrial. Nos reservamos todos los derechos.
The reproduction, transmission or use of this document or its is not permitted without express written authority.
Offenders will be liable for damages. All rights, including rights created by patent grant or registration of a utility model or design, are reserved.

Documentation structur: Standard
Source file: KO050722.ODA

Remarks	Date	Name	Norm	Date	22.07.2005	VSZ KOSICE	SIEMENS AG ISAOOLS	Substation control system 6MB
				Drawn	LANG			Command and signalling module:
				Appr.				Input assignment
						Orig./Repl. 1/Repl. by		Table

T = /BD 51
+
-S103
Page

Station: UW KOSICE
Device: EA01 EAG/3
Module: BM03
Number: 3

With mcb: No
Last input with: Freely marshalable

Input	Connect designation	Remote transmission FP: Master station	Name of telegram	Name of info element
1	B22	IEC 870-5-101	Meldungstelegramm DM	480
2	Z22	IEC 870-5-101	Meldungstelegramm DM	480
3	D24	IEC 870-5-101	Meldungstelegramm DM	340
4	B24	IEC 870-5-101	Meldungstelegramm DM	340
5	Z24			
6	D26			
7	B26	IEC 870-5-101	Meldungstelegramm DM	500
8	Z26	IEC 870-5-101	Meldungstelegramm DM	500
9	D28	IEC 870-5-101	Meldungstelegramm DM	510
10	B28	IEC 870-5-101	Meldungstelegramm DM	510
11	Z28			
12	D30			
13	B30			
14	Z30			
15	D32			
16	B32			

Proprietary data, company confidential. All rights reserved
Confe a litre de secret d'entreprise. Tous droits reservs.
Comunicado como segredo empresarial. Reservados todos os direitos.
Confiado como secreto industrial. Nos reservamos todos los derechos.
The reproduction, transmission or use of this document or its
is not permitted without expres written authority.
Offenders will be liable for damages. All rights, including rights
created by patent grant or registration of a utility model or design, are reserved.

Documentation structur: Standard
Source file: KO050722.ODA

Rev.	Remarks	Date	Name	Norm	Date 22.07.2005	Drawn LANG	Appr.	Orig./Repl. 1/Repl. by

VSZ KOSICE

SIEMENS AG
ISATOOLS

Substation control system 6MB
Command and signalling module:
Input assignment
Table

T = /BD 52
+
-S103
Page 52

Station: UW KOSICE
Device: EA01 EAG/3
Module: BM03
Number: 3

With mcb: No

Output	Connect designation	Section	Bay	Logical device	Lower limit	Value text	Column section	Column bay	Column logical device	Column information	Column value text	Type of command	Entry in event list	Entry in SML	Display in diag. as select. field	Archive	Operational indications	Protection indications	Overtravel time in s	Checkback via: Device	Module	Input	Checkback monit. time in s	Interlocking type:
1	Z2/Z4	R110	EA15	VYPINAC Q0	SCHALTZUSTAND	vyp.	22	27	39	0	75	DC	O	N	PV	R	Y	N	0.0	EA01 EAG/3	BM02	11	62.0	SCHALTGERÄT
2	D4/B4	R110	EA15	VYPINAC Q0	SCHALTZUSTAND	zap.	22	27	39	0	75	DC	O	N	PV	R	Y	N	0.0	EA01 EAG/3	BM02	11	62.0	SCHALTGERÄT
3	D6/B6	R110	EA18	VYPINAC Q0	SCHALTZUSTAND	vyp.	22	27	39	0	75	DC	O	N	PV	R	Y	N	0.0	EA01 EAG/3	BM02	13	62.0	SCHALTGERÄT
4	Z6/Z8	R110	EA18	VYPINAC Q0	SCHALTZUSTAND	zap.	22	27	39	0	75	DC	O	N	PV	R	Y	N	0.0	EA01 EAG/3	BM02	13	62.0	SCHALTGERÄT
5	D8/B8	R110	EA19	VYPINAC Q0	SCHALTZUSTAND	vyp.	22	27	39	0	75	DC	O	N	PV	R	Y	N	0.0	EA01 EAG/3	BM02	15	62.0	SCHALTGERÄT
6	D10/B10	R110	EA19	VYPINAC Q0	SCHALTZUSTAND	zap.	22	27	39	0	75	DC	O	N	PV	R	Y	N	0.0	EA01 EAG/3	BM02	15	62.0	SCHALTGERÄT
7	Z10/Z12	R110	EA20	VYPINAC Q0	SCHALTZUSTAND	vyp.	22	27	39	0	75	DC	O	N	PV	R	Y	N	0.0	EA01 EAG/3	BM03	1	62.0	SCHALTGERÄT
8	D12/B12	R110	EA20	VYPINAC Q0	SCHALTZUSTAND	zap.	22	27	39	0	75	DC	O	N	PV	R	Y	N	0.0	EA01 EAG/3	BM03	1	62.0	SCHALTGERÄT
9	D14/B14	R110	EA05	VYPINAC Q0	SCHALTZUSTAND	vyp.	22	27	39	0	75	DC	O	N	PV	R	Y	N	0.0	EA01 EAG/3	BM03	3	62.0	SCHALTGERÄT
10	Z14/Z16	R110	EA05	VYPINAC Q0	SCHALTZUSTAND	zap.	22	27	39	0	75	DC	O	N	PV	R	Y	N	0.0	EA01 EAG/3	BM03	3	62.0	SCHALTGERÄT
11	D16/B16														PV									
12	D18/B18														PV									
14	D20/B20														PV									
15	D22/Z20														PV									

Proprietary data, company confidential. All rights reserved.
Confie a titre de secret d'entreprise. Tous droits réservés.
Comunicado como segredo empresarial. Reservados todos os direitos.
Confiado como secreto industrial. Nos reservamos todos los derechos.
The reproduction, transmission or use of this document or its is not permitted without express written authority.
Offenders will be liable for damages. All rights, including rights created by patent grant or registration of a utility model or design, are reserved

Documentation structur: Standard
Source file: KO050722.ODA

			Date	22.07.2005	VSZ KOSICE	SIEMENS AG ISA TOOLS	Substation control system 6MB Command and signalling module: Commands Table
			Drawn	LANG			
			Appr.				
F	Remarks	Date	Name	Norm	Orig./Repl. 1/Repl. by		

T = /BD 53
+
-S103
Page

Station:
Device: EA01 EAG/3
Module: BM04
Number: 4

With mcb: No
Last input with: Freely marshalable

Input	Connect designation	Section	Bay	Logical device	Lower limit	Value text	Entry in event list	Entry in SML	Display in diagram	Archive	Monitored as feedback
1	B22										
2	Z22										
3	D24										
4	B24										
5	Z24										
6	D26										
7	B26										
8	Z26										
9	D28										
10	B28										
11	Z28										
12	D30										
13	B30										
14	Z30										
15	D32										
16	B32										

Proprietary data, company confidential. All rights reserved
Confia a tire de secret d'entreprise. Tous droits reservs.
Comunicado como segredo empresarial. Reservados todos os direitos
Confiado como secreto industrial. Nos reservamos todos los derechos
The reproduction, transmission or use of this document or its
is not permitted without expres written authority.
Offenders will be liable for damages. All rights, including rights
created by patent grant or registration of a utility model or design, are reserved

Documentation structur: Standard
Source file: KO050722.ODA

Rev.	Remarks	Date	Name	Norm	Date 22.07.2005	Drawn LANG	Appr.	Orig./Repl. 1/Repl. by

VSZ KOSICE

SIEMENS AG
ISATOOLS

Substation control system 6MB
Command and signalling module:
Input assignment
Table

T = /BD 54
+
-S103
Page 54

Station: UW KOSICE
Device: EA01 EAG/3
Module: BM04
Number: 4

With mcb: No

Output	Connect designation	Section	Bay	Logical device	Lower limit	Value text	Column section	Column bay	Column logical device	Column information	Column value text	Type of command	Entry in event list	Entry in SML	Display in diag. as select. field	Archive	Operational indications	Protection indications	Overtravel time in s	Checkback via: Device	Module	Input	Checkback monit. time in s	Interlocking type:
1	Z2/Z4	T201	TERC	VYPINAC Q0	SCHALTZUSTAND	vyp.	22	27	39	0	75	DC	O	N	PV	R	Y	N	0.0	EA01 EAG/3	BM03	7	62.0	SCHALTGERÄT
2	D4/B4	T201	TERC	VYPINAC Q0	SCHALTZUSTAND	zap.	22	27	39	0	75	DC	O	N	PV	R	Y	N	0.0	EA01 EAG/3	BM03	7	62.0	SCHALTGERÄT
3	D6/B6	T202	TERC	VYPINAC Q0	SCHALTZUSTAND	vyp.	22	27	39	0	75	DC	O	N	PV	R	Y	N	0.0	EA01 EAG/3	BM03	9	62.0	SCHALTGERÄT
4	Z6/Z8	T202	TERC	VYPINAC Q0	SCHALTZUSTAND	zap.	22	27	39	0	75	DC	O	N	PV	R	Y	N	0.0	EA01 EAG/3	BM03	9	62.0	SCHALTGERÄT
5	D8/B8														PV									
6	D10/B10														PV									
7	Z10/Z12														PV									
8	D12/B12														PV									
9	D14/B14														PV									
10	Z14/Z16														PV									
11	D16/B16														PV									
12	D18/B18														PV									
14	D20/B20														PV									
15	D22/Z20														PV									

Proprietary data, company confidential. All rights reserved.
Confie a titre de secret d'entreprise. Tous droits reservés.
Comunicado como segredo empresarial. Reservados todos os direitos.
Confiado como secreto industrial. Nos reservamos todos los derechos.

The reproduction, transmission or use of this document or its is not permitted without express written authority.
Offenders will be liable for damages. All rights, including rights created by patent grant or registration of a utility model or design, are reserved.

Documentation structur: Standard
Source file: KO050722.ODA

Rev	Remarks	Date	Name	Norm	Date	22.07.2005	VSZ KOSICE	SIEMENS AG SAIOOLS	Substation control system 6MB Command and signalling module: Commands Table	T = /BD 55 +	-S103	Page 55
					Drawn	LANG						
					Appr.							
							Orig./Repl. 1/Repl. by					

Station: UW KOSICE
Device: EA01 EAG/3
Module: BM05
Number: 5

With mcb: No
Last input with: Freely marshalable

Input	Connect designation	Section	Bay	Logical device	Lower limit	Value text	Column section	Column bay	Column logical device	Column information	Column value text	With command	Indication type	Entry in event list	Entry in alarm list	Entry in SML	Display in diagram	Archive	Operational indications	Protection indications	Filt. of raised & cleared	Bay blockage	Monitored as feedback	Checkback monit. time in s
1	B22	R10	KA01		NAPATIE PRE SYNCHRONIZ.1	KON ZAC	22	27	0	39	75	LZM	SI	R/C	N	N	N	R/C	Y	N	N	N	Y	10.0
2	Z22	R10	KA01		NAPATIE PRE SYNCHRONIZ.2	KON ZAC	22	27	0	39	75	LZM	SI	R/C	N	N	N	R/C	Y	N	N	N	Y	10.0
3	D24	R10	KA02		NAPATIE PRE SYNCHRONIZ.	KON ZAC	22	27	0	39	75	LZM	SI	R/C	N	N	N	R/C	Y	N	N	N	Y	10.0
4	B24	R10	PRIVOD		NAPATIE PRE SYNCHRONIZ.	KON ZAC	22	27	0	39	75	LZM	SI	R/C	N	N	N	R/C	Y	N	N	N	Y	10.0
5	Z24																							
6	D26																							
7	B26																							
8	Z26																							
9	D28																							
10	B28																							
11	Z28																							
12	D30																							
13	B30																							
14	Z30																							
15	D32																							
16	B32																							

Proprietary data, company confidential. All rights reserved
Confia a lhre de secret dentreprise. Tous droits reservés
Comunicado como segredo empresarial. Reservados todos os direitos.
Confiado como secreto industrial. Nos reservamos todos los derechos.
The reproduction, transmission or use of this document or its contents is not permitted without express written authority. Offenders will be liable for damages. All rights, including rights created by patent grant or registration of a utility model or design, are reserved

Documentation structur: Standard
Source file: KO050722.ODA

Rev.	Remarks	Date	Name	Norm	Date 22.07.2005	Drawn LANG	Appr.	Orig./Repl. 1/Repl. by

VSZ KOSICE

SIEMENS AG
ISAGOOLS

Substation control system 6MB
Command and signalling module:
Input assignment
Table

T = /BD 56
+
-S103
Page 56

Station: UW KOSICE
Device: EA01 EAG/3
Module: BM05
Number: 5

With mcb: No

Output	Connect designation	Section	Bay	Logical device	Lower limit	Value text	Column section	Column bay	Column logical device	Column information	Column value text	Type of command	Entry in event list	Entry in alarm list	Entry in SML	Display in diag. as select. field	Archive	Operational indications	Protection indications	Checkback via: Device	Module	Input	Checkback monit. time in s	Interlocking type:
1	Z2/Z4	R10	KA01		NAPATIE PRE SYNCHRONIZ.1	KON ZAC	22	27	0	39	75	SC	R/C	N	N	PV	R/C	Y	N	EA01 EAG/3	BM05	1	10.0	SCHALTGERÄT
2	D4/B4	R10	KA01		NAPATIE PRE SYNCHRONIZ.2	KON ZAC	22	27	0	39	75	SC	R/C	N	N	PV	R/C	Y	N	EA01 EAG/3	BM05	2	10.0	SCHALTGERÄT
3	D6/B6	R10	KA02		NAPATIE PRE SYNCHRONIZ.	KON ZAC	22	27	0	39	75	SC	R/C	N	N	PV	R/C	Y	N	EA01 EAG/3	BM05	3	10.0	SCHALTGERÄT
4	Z6/Z8	R10	PRIVOD		NAPATIE PRE SYNCHRONIZ.	KON ZAC	22	27	0	39	75	SC	R/C	N	N	PV	R/C	Y	N	EA01 EAG/3	BM05	4	10.0	SCHALTGERÄT
5	D8/B8															PV								
6	D10/B10															PV								
7	Z10/Z12															PV								
8	D12/B12															PV								
9	D14/B14															PV								
10	Z14/Z16															PV								
11	D16/B16															PV								
12	D18/B18															PV								
14	D20/B20															PV								
15	D22/Z20															PV								

Proprietary data, company confidential. All rights reserved.
Confie a titre de secret d'entreprise. Tous droits réservés.
Comunicado como segredo empresarial. Reservados todos os direitos.
Confiado como secreto industrial. Nos reservamos todos los derechos.

The reproduction, transmission or use of this document or its is not permitted without expres written authority.
Offenders will be liable for damages. All rights, including rights created by patent grant or registration of a utility model or design, are reserved

Documentation structur: Standard
Source file: KO050722.ODA

			Date	22.07.2005	VSZ KOSICE	SIEMENS AG ISA TOOLS	Substation control system 6MB
			Drawn	LANG			Command and signalling module:
			Appr.				Commands
F	Remarks	Date	Name	Norm	Orig./Repl. 1/Repl. by		Table

T = /BD 57
+
-S103
Page

Station: UW KOSICE
Device: EA01 EAG/3
Module: EA01 SY
Number: 1

Line number	Station	Section	Bay	Logical device	Lower limit	Value text	Column section	Column bay	Column logical device	Column information	Column value text	Indication type	Entry in event list	Entry in alarm list	Entry in SML	Display in diagram	Archive	Operational indications	Protection indications
1	UW KOSICE	R110	EA01/3	SY	ROZDIL FREQ.		22	27	0	39		TR	O	N	N	N	R	Y	N
2	UW KOSICE	R110	EA01/3	SY	ROZDIL NAPETI		22	27	0	39		TR	O	N	N	N	R	Y	N
3	UW KOSICE	R110	EA01/3	SY	ROZDIL UHLU		22	27	0	39		TR	O	N	N	N	R	Y	N
4	UW KOSICE	R110	EA03	SY	ROZDIL FREQ.		22	27	0	39		TR	O	N	N	N	R	Y	N
5	UW KOSICE	R110	EA03	SY	ROZDIL NAPETI		22	27	0	39		TR	O	N	N	N	R	Y	N
6	UW KOSICE	R110	EA03	SY	ROZDIL UHLU		22	27	0	39		TR	O	N	N	N	R	Y	N
7	UW KOSICE	R110	EA05	SY	FREQUENZDIFFERENZ							NV	N	N	N	N	N		
8	UW KOSICE	R110	EA05	SY	SPANNUNGSDIFFERENZ							NV	N	N	N	N	N		
9	UW KOSICE	R110	EA05	SY	WINKELDIFFERENZ							NV	N	N	N	N	N		
10	UW KOSICE	R110	EA07	SY	ROZDIL FREQ.		22	27	0	39		TR	O	N	N	N	R	Y	N
11	UW KOSICE	R110	EA07	SY	ROZDIL NAPETI		22	27	0	39		TR	O	N	N	N	R	Y	N
12	UW KOSICE	R110	EA07	SY	ROZDIL UHLU		22	27	0	39		TR	O	N	N	N	R	Y	N
13	UW KOSICE	R110	EA09	SY	ROZDIL FREQ.		22	27	0	39		TR	O	N	N	N	R	Y	N
14	UW KOSICE	R110	EA09	SY	ROZDIL NAPETI		22	27	0	39		TR	O	N	N	N	R	Y	N
15	UW KOSICE	R110	EA09	SY	ROZDIL UHLU		22	27	0	39		TR	O	N	N	N	R	Y	N
16	UW KOSICE	R110	EA11	SY	ROZDIL FREQ.		22	27	0	39		TR	O	N	N	N	R	Y	N
17	UW KOSICE	R110	EA11	SY	ROZDIL NAPETI		22	27	0	39		TR	O	N	N	N	R	Y	N
18	UW KOSICE	R110	EA11	SY	ROZDIL UHLU		22	27	0	39		TR	O	N	N	N	R	Y	N
19	UW KOSICE	R110	EA13	SY	ROZDIL FREQ.		22	27	0	39		TR	O	N	N	N	R	Y	N
20	UW KOSICE	R110	EA13	SY	ROZDIL NAPETI		22	27	0	39		TR	O	N	N	N	R	Y	N
21	UW KOSICE	R110	EA13	SY	ROZDIL UHLU		22	27	0	39		TR	O	N	N	N	R	Y	N
22	UW KOSICE	R110	EA15	SY	ROZDIL FREQ.		22	27	0	39		TR	O	N	N	N	R	Y	N
23	UW KOSICE	R110	EA15	SY	ROZDIL NAPETI		22	27	0	39		TR	O	N	N	N	R	Y	N
24	UW KOSICE	R110	EA15	SY	ROZDIL UHLU		22	27	0	39		TR	O	N	N	N	R	Y	N
25	UW KOSICE	R110	EA18	SY	ROZDIL FREQ.		22	27	0	39		TR	O	N	N	N	R	Y	N
26	UW KOSICE	R110	EA18	SY	ROZDIL NAPETI		22	27	0	39		TR	O	N	N	N	R	Y	N
27	UW KOSICE	R110	EA18	SY	ROZDIL UHLU		22	27	0	39		TR	O	N	N	N	R	Y	N
28	UW KOSICE	R110	EA19	SY	ROZDIL FREQ.		22	27	0	39		TR	O	N	N	N	R	Y	N
29	UW KOSICE	R110	EA19	SY	ROZDIL NAPETI		22	27	0	39		TR	O	N	N	N	R	Y	N
30	UW KOSICE	R110	EA19	SY	ROZDIL UHLU		22	27	0	39		TR	O	N	N	N	R	Y	N
31	UW KOSICE	R110	EA20	SY	ROZDIL FREQ.		22	27	0	39		TR	O	N	N	N	R	Y	N
32	UW KOSICE	R110	EA20	SY	ROZDIL NAPETI		22	27	0	39		TR	O	N	N	N	R	Y	N

Proprietary data, company confidential. All rights reserved
Confiado a tire de secret d'entreprise. Tous droits réservés
Comunicado como segredo empresarial. Reservados todos os direitos.
Confiado como secreto industrial. Nos reservamos todos los derechos.
The reproduction, transmission or use of this document or its contents is not permitted without express written authority. Offenders will be liable for damages. All rights, including rights created by patent grant or registration of a utility model or design, are reserved

Documentation structure: Standard
Source file: K0050722.ODA

Rev.	Remarks	Date	Name	Norm
			Date	22.07.2005
			Drawn	LANG
			Appr.	

VSZ KOSICE
Orig./Repl. 1/Repl. by

SIEMENS AG
ISATOOLS

Substation control system 6MB
Synchronization module:
Indications
Table

T = /BD 58
+
-S103
Page 58

Station: UW KOSICE
Device: EA01 EAG/3
Module: EA01 SY
Number: 1

Line number	Station	Section	Bay	Logical device	Lower limit	Value text	Column section	Column bay	Column logical device	Column information	Column value text	Indication type	Entry in event list	Entry in alarm list	Entry in SML	Display in diagram	Archive	Operational indications	Protection indications
33	UW KOSICE	R110	EA20	SY	ROZDIL UHLU		22	27	0	39		TR	O	N	N	N	R	Y	N

Proprietary data, company confidential. All rights reserved.
Confie a titre de secret d'entreprise. Tous droits reservés.
Comunicado como segredo empresarial. Reservados todos os direitos.
Confiado como secreto industrial. Nos reservamos todos los derechos.

The reproduction, transmission or use of this document or its is not permitted without expres written authority.
Offenders will be liable for damages. All rights, including rights created by patent grant or registration of a utility model or design, are reserved

Documentation structur: Standard
Source file: KO050722.ODA

			Date	22.07.2005	VSZ KOSICE	SIEMENS AG ISA TOOLS	Substation control system 6MB	T =	/BD 59
			Drawn	LANG			Synchronization module:	+	
			Appr.				Indications		
R	Remarks	Date	Name	Norm	Orig./Repl. 1/Repl. by		Table	-S103	Page 59

Station: UW KOSICE
Device: EA01 EAG/3
Module: EA01 SY
Number: 1

Packet number: 8
Version number: 1
LZG monitoring: Switchover
Synchronization: Yes
Analog val. func. package: Measurement with synchronization

Analog channel no.	Connect designation	Section	Bay	Logical device	Lower limit	Display value	Dimension	Zero suppression f. display in %	Bay blockage	Thres val. for switchover in %	Process analog value in I/O uni	With live-zero monitoring	Display in diagram	Archive	Keep non-return pointer	Calculated demand value	Derive percentage value
1	U L1-N											PV					
2	U L2-N											PV					
3	U L3-N											PV					
4	I L1											PV					
5	I L2											PV					
6	I L3											PV					
7	U L1-L2											PV					
8	U L2-L3											PV					
9	U L3-L1											PV					
10	SUMME U											PV					
11	SUMME I											PV					
12	WIRKLEISTU											PV					
13	BLINDLEIST											PV					
14	LEISTUNGSF											PV					
15	Fsyn1											PV					
16	Fsyn2											PV					
17	F U1-E											PV					
18	Usyn2	R110	EA01/3	SYNCHROMESSWERTE	SY-SPANNUNG 2	10.00	KV	1.0	N	0.0	N	PV	Y	N	PV	PV	PV
19	Usyn1	R110	EA01/3	SYNCHROMESSWERTE	SY-SPANNUNG 1	10.00	KV	1.0	N	0.0	N	PV	Y	N	PV	PV	PV
20	Fsyn2 SYF	R110	EA01/3	SYNCHROMESSWERTE	Frequenz 2	50.00	Hz	1.0	N	0.0	N	PV	Y	N	PV	PV	PV
21	Fsyn1 SYF	R110	EA01/3	SYNCHROMESSWERTE	Frequenz 1	50.00	Hz	1.0	N	0.0	N	PV	Y	N	PV	PV	PV
22	Winkel Sy	R110	EA01/3	SYNCHROMESSWERTE	WINKELDIFFERENZ	180.00	GRAD	1.0	N	0.0	N	PV	Y	N	PV	PV	PV
23	U sy	R110	EA01/3	SYNCHROMESSWERTE	SPANNUNGSDIFFERENZ	110.00	KV	1.0	N	0.0	N	PV	Y	N	PV	PV	PV
24	F sy	R110	EA01/3	SYNCHROMESSWERTE	FREQUENZDIFFERENZ	8140.00	mHz	1.0	N	0.0	N	PV	Y	N	PV	PV	PV

Proprietary data, company confidential. All rights reserved.
Confie a titre de secret d'entreprise. Tous droits réservés.
Comunicado como segredo empresarial. Reservados todos os direitos.
Confiado como secreto industrial. Nos reservamos todos los derechos.
The reproduction, transmission or use of this document or its is not permitted without express written authority.
Offenders will be liable for damages. All rights, including rights created by patent grant or registration of a utility model or design, are reserved.

Documentation structur: Standard
Source file: KO050722.ODA

Rev.	Remarks	Date	Name	Date	22.07.2005	VSZ KOSICE	SIEMENS AG ISA TOOLS	Substation control system 6MB
				Drawn	LANG			Synchronization module:
				Appr.				Analog values
				Norm		Orig./Repl. 1/Repl. by		Table

T = /BD 60
+
-S103

Device: EA01 EAG/3
Module: LT
Packet no.: 8
Version no.: 1

Connect. with:

Device	Subrack	Module	Connection SKA:	UART	Multiplexer
LZG	LZG-BGT	AST 2	D18/8	2	16

Proprietary data, company confidential. All rights reserved.
Confie a titre de secret d'entreprise. Tous droits reservés.
Comunicado como segredo empresarial. Reservados todos os direitos.
Confiado como secreto industrial. Nos reservamos todos los derechos.

The reproduction, transmission or use of this document or its is not permitted without express written authority.
Offenders will be liable for damages. All rights, including rights created by patent grant or registration of a utility model or design, are reserved.

Documentation structur: Standard
Source file: KO050722.ODA

			Date	22.07.2005	VSZ KOSICE	SIEMENS AG ISA TOOLS	Substation control system 6MB Processor module for control	T = /BD 61
			Drawn	LANG				+
			Appr.					
F	Remarks	Date	Name	Norm	Orig./Repl. 1/Repl. by		Table	-S103 Page

Station: UW KOSICE
Device: LZG
Module: AE01
Transducer addr.: 5

Packet number: 8
Version number: 3
Check SW status: No
SW status:
Check HW status: No
HW status:

Rated frequen 50 Hz
Analog value acquis. with (bit): 12
Input areas: DC current: +/- 2.5, 5, 10 and 20 mA

Analog channel no.	Connect designation	Section	Bay	Logical device	Lower limit	Input values	Polarity	Display value	Dimension	Zero suppression f. display in %	Knee point: Acquisition value in mA	Knee point: Display value	With live-zero monitoring	Display in diagram	Archive	Keep non-return pointer	Calculated demand value	Derive percentage value	Teletrans. FP raw val. Master station	Name of telegram	Name of info element
1	D2	R110	EA05		SYCHR. FREKV. 1	20 mA	BIP	55.00	Hz	PV	0.00	45.00	PV	Y	N	PV	PV	PV	IEC 870-5-101	Meßwerttelegramm	744
2	D4	R110	EA05		SYCHR. FREKV. 2	20 mA	BIP	55.00	Hz	PV	0.00	45.00	PV	Y	N	PV	PV	PV	IEC 870-5-101	Meßwerttelegramm	745
3	D6	R110	EA05		SYNCHR. ROZDIEL UHOL	20 mA	BIP	120.00	GRAD	PV			PV	Y	N	PV	PV	PV	IEC 870-5-101	Meßwerttelegramm	747
4	D8	R110	EA05		SYNCHR. ROZDIEL NAPAT	20 mA	BIP	133.36	KV	PV			PV	Y	N	PV	PV	PV	IEC 870-5-101	Meßwerttelegramm	746
5	D10					20 mA	BIP						PV								
6	D12					20 mA	BIP						PV								
7	D14					20 mA	BIP						PV								
8	D16					20 mA	BIP						PV								
9	Z2					20 mA	BIP						PV								
10	Z4					20 mA	BIP						PV								
11	Z6					20 mA	BIP						PV								
12	Z8					20 mA	BIP						PV								
13	Z10					20 mA	BIP						PV								
14	Z12					20 mA	BIP						PV								
15	Z14					20 mA	BIP						PV								
16	Z16					20 mA	BIP						PV								
17	D18					20 mA	BIP						PV								
18	D20					20 mA	BIP						PV								
19	D22					20 mA	BIP						PV								
20	D24					20 mA	BIP						PV								
21	D26					20 mA	BIP						PV								
22	D28					20 mA	BIP						PV								
23	D30					20 mA	BIP						PV								
24	D32					20 mA	BIP						PV								
25	Z18					20 mA	BIP						PV								
26	Z20					20 mA	BIP						PV								
27	Z22					20 mA	BIP						PV								
28	Z24					20 mA	BIP						PV								
29	Z26					20 mA	BIP						PV								
30	Z28					20 mA	BIP						PV								
31	Z30					20 mA	BIP						PV								
32	Z32					20 mA	BIP						PV								

Proprietary data, company confidential. All rights reserved.
Confie a titre de secret d'entreprise. Tous droits réservés.
Comunicado como segredo empresarial. Reservados todos os direitos.
Confiado como secreto industrial. Nos reservamos todos los derechos.
The reproduction, transmission or use of this document or its is not permitted without express written authority.
Offenders will be liable for damages. All rights, including rights created by patent grant or registration of a utility model or design, are reserved.

Documentation structur: Standard
Source file: KO050722.ODA

Rev.	Remarks	Date	Name	Norm

Date 22.07.2005
Drawn LANG
Appr.

VSZ
KOSICE

Orig./Repl. 1/Repl. by

SIEMENS AG
ISA TOOLS

Substation control system 6MB
Electronic analog input module SINAUT LSA:
Analog values
Table

T = /BD 62
+
-S103

Station: UW KOSICE
Device: LZG
Module: BF01
Transducer addr.: 0

Packet number: 8
Version number: 3
Check SW status: No
SW status:
Check HW status: No
HW status:

Last output for: Freely marshalable
Output duration in min:
Timeout monitoring time in s: 5.0

Output	Connect designation	Section	Bay	Logical device	Lower limit	Value text	Column section	Column bay	Column logical device	Column information	Column value text	Type of command	Entry in event list	Entry in alarm list	Entry in SML	Display in diag. as select. field	Archive	Operational indications	Protection indications	Output mode	SW termination time in s	Monit. time for com. enable in s	Interlocking type:
1	1	GERAETE-STATUSMELDUNGEN	LZG		SPO ZAPNUTIE HUKACKY	vyp. zap.	0	22	0	39	75	SC	N	N	N	PV	R	Y	N	SWT	0.6	5.0	LIVEKONTAKT
2	2	GERAETE-STATUSMELDUNGEN	LZG		SPO VYPNUTIE HUKACKY	vyp. zap.	0	22	0	39	75	SC	N	N	N	PV	R	Y	N	SWT	0.6	5.0	LIVEKONTAKT
3	3															PV							
4	4															PV							
5	5															PV							
6	6															PV							
7	7															PV							
8	8	GERAETE-STATUSMELDUNGEN	LZG		LIVEKONTAKT	KON ZAC	0	22	0	39	75	SC	N	N	N	PV	N			CO		5.0	LIVEKONTAKT

Proprietary data, company confidential. All rights reserved.
Confie a titre de secret d'entreprise. Tous droits reservés.
Comunicado como segredo empresarial. Reservados todos os direitos.
Confiado como secreto industrial. Nos reservamos todos los derechos.

The reproduction, transmission or use of this document or its is not permitted without express written authority.
Offenders will be liable for damages. All rights, including rights created by patent grant or registration of a utility model or design, are reserved.

Documentation structur: Standard
Source file: KO050722.ODA

Remarks	Date	Name	Norm	Date	22.07.2005	VSZ KOSICE	SIEMENS AG ISA TOOLS	Substation control system 6MB Command enable module SINAUT LSA: Commands Table	T = /BD 63 + -S103 Page
				Drawn	LANG				
				Appr.					
				Orig./Repl. 1/Repl. by					

Station: UW KOSICE
Device: LZG
Module: BF01
Transducer addr.: 0

Packet number: 8
Version number: 3
Check SW status: No
SW status:
Check HW status: No
HW status:

HW filtering time: (0.25 ms)
Last input with: Freely marshalable

Input	Connect designation	Section	Bay	Logical device	Lower limit	Value text	Column section	Column bay	Column logical device	Column information	Column value text	With command	Indication type	Entry in event list	Entry in alarm list	Entry in SML	Display in diagram	Archive	Filt. of raised & cleared	Bay blockage	With chatter disable	Monitored as feedback	Command derivation
9	1																						
10	2																						
11	3																						
12	4																						
13	5																						
14	6	ALLGEMEIN		LED ZKOUSKA	KON	ZAC	0	0	0	39	75	PV	SI	R/C	N	N	N	N	N	N	N	N	LED TEST
15	7	ALLGEMEIN		LED	KON	ZAC	0	0	0	39	75	PV	SI	R/C	N	N	N	N	N	N	N	N	LED EIN/AUS
16	8																						

Proprietary data, company confidential. All rights reserved
Confia a tifre da secret dentreprise. Tous droits reservs
Comunicado como segredo empresarial Reservados todos os direitos
Confiado como secreto industrial Nos reservamos todos los derechos

The reproduction, transmission or use of this document or its
is not permitted without express written authority.
Offenders will be liable for damages. All rights, including rights
created by patent grant or registration of a utility model or design, are reserved

Documentation structur: Standard
Source file: KO050722.ODA

Rev.	Remarks	Date	Name	Norm	Date 22.07.2005	VSZ KOSICE	SIEMENS AG ISATOOLS	Substation control system 6MB Command enable module SINAUT LSA: Indications Table	T = /BD 64 + -S103 Page 64
					Drawn LANG				
					Appr.				
						Orig./Repl. 1/Repl. by			

Proprietary data, company confidential. All rights reserved
Confidentiel. Tous droits réservés
Comunicado como segredo empresarial. Reservados todos os direitos
Comunicado como secreto industrial. Nos reservamos todos los derechos.
The reproduction, transmission or use of this document or its contents is not permitted without express written authority. Offenders will be liable for damages. All rights, including rights created by patent grant or registration of a utility model or design, are reserved

Station: UW KOSICE
Device: LZG
Module: DE1
Transducer addr.: 1

Packet number: 8
Version number: 3
Check SW status: No
SW status:
Check HW status: No
HW status:

HW filtering time for input 01 to 08: 08 ms
HW filtering time for input 09 to 16: 08 ms
HW filtering time for input 17 to 24: 08 ms
HW filtering time for input 25 to 32: 08 ms

Input	Connect designation	Section	Bay	Logical device	Lower limit	Value text		Column section	Column bay	Column logical device	Column information	Column value text	With command	Indication type	Entry in event list	Entry in alarm list	Acknowledge	Display in indication area	Indication class	Entry in SML	Display in diagram	Archive	Operational indications	Protection indications	Filt. of raised & cleared	Bay blockage	With chatter disable	Monitored as feedback
1	D2	R110	VLS	ANG1	POSOB.PODPAT.OCHRANY	KON	ZAC	22	27	0	39	75	PV	TR	O	Y	O	Y	1	N	N	R	N	Y		N	N	N
2	D4	R110	VLS	ANG1	ISTIC QF1 VYPNUTY	KON	ZAC	22	27	0	39	75	PV	SI	R/C	N				N	N	R/C	Y	N	N	N	N	N
3	D6	R110	VLS	ANG2	SUM.HLAS.VYPN.POISTIEK	KON	ZAC	22	27	0	39	75	PV	SI	R/C	Y	R/C	Y	1	N	N	R/C	N	Y	N	N	N	N
4	D8	R110	VLS	ANG3	SUM.HLAS.VYPN.POISTIEK	KON	ZAC	22	27	0	39	75	PV	SI	R/C	Y	R/C	Y	1	N	N	R/C	N	Y	N	N	N	N
5	D10	R110	VLS	ANG4	SUM.HLAS.VYPN.POISTIEK	KON	ZAC	22	27	0	39	75	PV	SI	R/C	Y	R/C	Y	1	N	N	R/C	N	Y	N	N	N	N
6	D12	R110	VLS	ANG5	SUM.HLAS.VYPN.POISTIEK	KON	ZAC	22	27	0	39	75	PV	SI	R/C	Y	R/C	Y	1	N	N	R/C	N	Y	N	N	N	N
7	D14	R110	VLS	ANG6	POSOBENIE AUTOM.ZASKOKU	KON	ZAC	22	27	0	39	75	PV	TR	O	N				N	N	R	Y	N		N	N	N
8	D16	R110	VLS	ANG6	USPESNY ZASKOK	KON	ZAC	22	27	0	39	75	PV	TR	O	N				N	N	R	Y	N		N	N	N
9	Z2	R110	VLS	ANG6	NEUSPESNY ZASKOK	KON	ZAC	22	27	0	39	75	PV	TR	O	Y	O	Y	1	N	N	R	N	Y		N	N	N
10	Z4	R110	VLS	ANG6	STRATA OVLAD.NAPATIA	KON	ZAC	22	27	0	39	75	PV	SI	R/C	Y	R/C	Y	1	N	N	R/C	N	Y	N	N	N	N
11	Z6	R110	VLS	ANG6	VYPN.ISTICA PODPAT.RELE	KON	ZAC	22	27	0	39	75	PV	SI	R/C	Y	R/C	Y	1	N	N	R/C	N	Y	N	N	N	N
12	Z8	R110	VLS	ANG6	ZAPNUTY STAV PRIPOJNIC	KON	ZAC	22	27	0	39	75	PV	SI	R/C	N				N	N	R/C	Y	N	N	N	N	N
13	Z10	R110	VLS	ANG7	SUM.HLAS.VYPN.POISTIEK	KON	ZAC	22	27	0	39	75	PV	SI	R/C	Y	R/C	Y	1	N	N	R/C	N	Y	N	N	N	N
14	Z12	R110	VLS	ANG8	SUM.HLAS.VYPN.POISTIEK	KON	ZAC	22	27	0	39	75	PV	SI	R/C	Y	R/C	Y	1	N	N	R/C	N	Y	N	N	N	N
15	Z14	R110	VLS	ANG9	SUM.HLAS.VYPN.POISTIEK	KON	ZAC	22	27	0	39	75	PV	SI	R/C	Y	R/C	Y	1	N	N	R/C	N	Y	N	N	N	N
16	Z16	R110	VLS	ANG10	SUM.HLAS.VYPN.POISTIEK	KON	ZAC	22	27	0	39	75	PV	SI	R/C	Y	R/C	Y	1	N	N	R/C	N	Y	N	N	N	N
17	D18	R110	VLS	ANG11	POSOB.PODPAT.OCHRANY	KON	ZAC	22	27	0	39	75	PV	TR	O	Y	O	Y	1	N	N	R	N	Y		N	N	N
18	D20	R110	VLS	ANG11	ISTIC QF1 VYPNUTY	KON	ZAC	22	27	0	39	75	PV	SI	R/C	N				N	N	R/C	Y	N	N	N	N	N
19	D22	R110	VLS	ATF1	ZEMNE SPOJENIE	KON	ZAC	22	27	0	39	75	PV	SI	R/C	Y	R/C	Y	1	N	N	R/C	N	Y	N	N	N	N
20	D24	R110	VLS	ATF1	PODPATIE	KON	ZAC	22	27	0	39	75	PV	SI	R/C	Y	R/C	Y	1	N	N	R/C	Y	N	N	N	N	N
21	D26	R110	VLS	ATF1	NADPATIE	KON	ZAC	22	27	0	39	75	PV	SI	R/C	Y	R/C	Y	1	N	N	R/C	Y	N	N	N	N	N
22	D28	R110	VLS	ATL2	ZEMNE SPOJENIE	KON	ZAC	22	27	0	39	75	PV	SI	R/C	Y	R/C	Y	1	N	N	R/C	N	Y	N	N	N	N
23	D30	R110	VLS	ATL2	PODPATIE	KON	ZAC	22	27	0	39	75	PV	SI	R/C	Y	R/C	Y	1	N	N	R/C	Y	N	N	N	N	N
24	D32	R110	VLS	ATL2	NADPATIE	KON	ZAC	22	27	0	39	75	PV	SI	R/C	Y	R/C	Y	1	N	N	R/C	Y	N	N	N	N	N
25	Z18	R110	VLS	ATJ1	SUM.HLAS.VYPN.ISTICOV	KON	ZAC	22	27	0	39	75	PV	SI	R/C	Y	R/C	Y	1	N	N	R/C	N	Y	N	N	N	N
26	Z20																											
27	Z22	R110	VLS	ATJ2	POSOB.NADPAT.RELE NA W1	KON	ZAC	22	27	0	39	75	PV	SI	R/C	Y	R/C	Y	1	N	N	R/C	N	Y	N	N	N	N
28	Z24	R110	VLS	ATJ2	POSOB.PODPAT.RELE NA W1	KON	ZAC	22	27	0	39	75	PV	SI	R/C	Y	R/C	Y	1	N	N	R/C	N	Y	N	N	N	N
29	Z26	R110	VLS	ATJ2	ZEM.SPOJENIE NA+POLE W1	KON	ZAC	22	27	0	39	75	PV	SI	R/C	Y	R/C	Y	1	N	N	R/C	N	Y	N	N	N	N
30	Z28	R110	VLS	ATJ2	ZEM.SPOJENIE NA-POLE W1	KON	ZAC	22	27	0	39	75	PV	SI	R/C	Y	R/C	Y	1	N	N	R/C	N	Y	N	N	N	N
31	Z30	R110	VLS	ATJ2	ZEM.OCHRANA V js.SIETI	KON	ZAC	22	27	0	39	75	PV	SI	R/C	Y	R/C	Y	1	N	N	R/C	N	Y	N	N	N	N
32	Z32	R110	VLS	ATJ2	POSOB.NADPAT.RELE NA W2	KON	ZAC	22	27	0	39	75	PV	SI	R/C	Y	R/C	Y	1	N	N	R/C	N	Y	N	N	N	N

Documentation structur: Standard
Source file: KO050722.ODA

Date	22.07.2005	VSZ KOSICE	SIEMENS AG ISATOOLS
Drawn	LANG		
Appr.			
Remarks	Date	Name Norm	Orig./Repl. 1/Repl. by

Substation control system 6MB
Digital input module SINAUT LSA:
Input assignment
Table

T = /BD 65
+
-S103
Page

Station: UW KOSICE
Device: LZG
Module: DE1
Transducer addr.: 1

Packet number: 8
Version number: 3
Check SW status: No
SW status:
Check HW status: No
HW status:

HW filtering time for input 01 to 08: 08 ms
HW filtering time for input 09 to 16: 08 ms
HW filtering time for input 17 to 24: 08 ms
HW filtering time for input 25 to 32: 08 ms

Input	Connect designation	Command derivation
1	D2	Alarm 1 (Hupenbefehl)
2	D4	
3	D6	Alarm 1 (Hupenbefehl)
4	D8	Alarm 1 (Hupenbefehl)
5	D10	Alarm 1 (Hupenbefehl)
6	D12	Alarm 1 (Hupenbefehl)
7	D14	
8	D16	
9	Z2	Alarm 1 (Hupenbefehl)
10	Z4	Alarm 1 (Hupenbefehl)
11	Z6	Alarm 1 (Hupenbefehl)
12	Z8	
13	Z10	Alarm 1 (Hupenbefehl)
14	Z12	Alarm 1 (Hupenbefehl)
15	Z14	Alarm 1 (Hupenbefehl)
16	Z16	Alarm 1 (Hupenbefehl)
17	D18	Alarm 1 (Hupenbefehl)
18	D20	
19	D22	Alarm 1 (Hupenbefehl)
20	D24	Alarm 1 (Hupenbefehl)
21	D26	Alarm 1 (Hupenbefehl)
22	D28	Alarm 1 (Hupenbefehl)
23	D30	Alarm 1 (Hupenbefehl)
24	D32	Alarm 1 (Hupenbefehl)
25	Z18	Alarm 1 (Hupenbefehl)
26	Z20	
27	Z22	Alarm 1 (Hupenbefehl)
28	Z24	Alarm 1 (Hupenbefehl)
29	Z26	Alarm 1 (Hupenbefehl)
30	Z28	Alarm 1 (Hupenbefehl)
31	Z30	Alarm 1 (Hupenbefehl)
32	Z32	Alarm 1 (Hupenbefehl)

Proprietary data, company confidential. All rights reserved.
Confie a titre de secret d'entreprise. Tous droits reserv.s.
Comunicado como segredo empresarial. Reservados todos os direitos.
Confiado como secreto industrial. Nos reservamos todos los derechos.

The reproduction, transmission or use of theis document or its is not permitted without expres written authority.
Offenders will be liable for damages. All rights, including rights created by patent grant or registration of a utility model or design, are reserved

Documentation structur: Standard
Source file: KO050722.ODA

Rev.	Remarks	Date	Name	Date	22.07.2005
				Drawn	LANG
				Appr.	
				Norm	

VSZ
KOSICE

Orig./Repl. 1/Repl. by

SIEMENS AG
ISA TOOLS

Substation control system 6MB
Digital input module SINAUT LSA:
Input assignment
Table

T = /BD 66
+
-S103
Page 66

Proprietary data, company confidential. All rights reserved.
Contiene datos de secreto empresarial. Todos los derechos reservados.
Comunicado como segredo empresarial. Reservados todos os direitos.
Confiado como secreto industrial. Nos reservamos todos los derechos.

The reproduction, transmission or use of this document or its contents is not permitted without express written authority. Offenders will be liable for damages. All rights, including rights created by patent grant or registration of a utility model or design, are reserved.

Station: UW KOSICE
Device: LZG
Module: DE2
Transducer addr.: 2

Packet number: 8
Version number: 3
Check SW status: No
SW status:
Check HW status: No
HW status:

HW filtering time for input 01 to 08: 08 ms
HW filtering time for input 09 to 16: 08 ms
HW filtering time for input 17 to 24: 08 ms
HW filtering time for input 25 to 32: 08 ms

Input	Connect designation	Section	Bay	Logical device	Lower limit	Value text	Column section	Column bay	Column logical device	Column information	Column value text	With command	Indication type	Entry in event list	Entry in alarm list	Acknowledge	Display in indication area	Indication class	Entry in SML	Display in diagram	Archive	Operational indications	Protection indications	Filt. of raised & cleared	Bay blockage	With chatter disable	Monitored as feedback
1	D2	R110	VLS	ATJ4	POSOB.PODPAT.RELE NA W2	KON ZAC	22	27	0	39	75	PV	SI	R/C	Y	R/C	Y	1	N	N	R/C	N	Y	N	N	N	N
2	D4	R110	VLS	ATJ4	ZEM.SPOJENIE NA+POLE W2	KON ZAC	22	27	0	39	75	PV	SI	R/C	Y	R/C	Y	1	N	N	R/C	N	Y	N	N	N	N
3	D6	R110	VLS	ATJ4	ZEM.SPOJENIE NA-POLE W2	KON ZAC	22	27	0	39	75	PV	SI	R/C	Y	R/C	Y	1	N	N	R/C	N	Y	N	N	N	N
4	D8	R110	VLS	ATJ3	VYPINAC QM1	KON ZAC	22	27	0	39	75	PV	SI	R/C	N				N	N	R/C	Y	N	N	N	N	N
5	D10	R110	VLS	ATJ3	VYPINAC QM2	KON ZAC	22	27	0	39	75	PV	SI	R/C	N				N	N	R/C	Y	N	N	N	N	N
6	D12	R110	VLS	ATJ3	VYPINAC QM3	KON ZAC	22	27	0	39	75	PV	SI	R/C	N				N	N	R/C	Y	N	N	N	N	N
7	D14	R110	VLS	ATJ3	VYPINAC QM4	KON ZAC	22	27	0	39	75	PV	SI	R/C	N				N	N	R/C	Y	N	N	N	N	N
8	D16	R110	VLS	ATJ2	VYPINAC QM5	KON ZAC	22	27	0	39	75	PV	SI	R/C	N				N	N	R/C	Y	N	N	N	N	N
9	Z2	R110	VLS	ATJ2	VYPINAC QM6	KON ZAC	22	27	0	39	75	PV	SI	R/C	N				N	N	R/C	Y	N	N	N	N	N
10	Z4	R110	VLS	ATJ4	VYPINAC QM7	KON ZAC	22	27	0	39	75	PV	SI	R/C	N				N	N	R/C	Y	N	N	N	N	N
11	Z6	R110	VLS	ATJ4	VYPINAC QM8	KON ZAC	22	27	0	39	75	PV	SI	R/C	N				N	N	R/C	Y	N	N	N	N	N
12	Z8																										
13	Z10	R110	VLS	ATJ5	SUM.HLAS.VYPN.ISTICA	KON ZAC	22	27	0	39	75	PV	SI	R/C	Y	R/C	Y	1	N	N	R/C	N	Y	N	N	N	N
14	Z12	R110	VLS	ATF3	ZEMNE SPOJENIE	KON ZAC	22	27	0	39	75	PV	SI	R/C	Y	R/C	Y	1	N	N	R/C	N	Y	N	N	N	N
15	Z14	R110	VLS	ATF3	PODPATIE	KON ZAC	22	27	0	39	75	PV	SI	R/C	Y	R/C	Y	1	N	N	R/C	Y	N	N	N	N	N
16	Z16	R110	VLS	ATF3	NADPATIE	KON ZAC	22	27	0	39	75	PV	SI	R/C	Y	R/C	Y	1	N	N	R/C	Y	N	N	N	N	N
17	D18	R110	VLS	ATF4	ZEMNE SPOJENIE	KON ZAC	22	27	0	39	75	PV	SI	R/C	Y	R/C	Y	1	N	N	R/C	Y	N	N	N	N	N
18	D20	R110	VLS	ATF4	PODPATIE	KON ZAC	22	27	0	39	75	PV	SI	R/C	Y	R/C	Y	1	N	N	R/C	Y	N	N	N	N	N
19	D22	R110	VLS	ATF4	NADPATIE	KON ZAC	22	27	0	39	75	PV	SI	R/C	Y	R/C	Y	1	N	N	R/C	Y	N	N	N	N	N
20	D24	R110	VLS	ATL1	POSOB.NADPAT.RELE NA W1	KON ZAC	22	27	0	39	75	PV	SI	R/C	Y	R/C	Y	1	N	N	R/C	N	Y	N	N	N	N
21	D26	R110	VLS	ATL1	POSOB.PODPAT.RELE NA W1	KON ZAC	22	27	0	39	75	PV	SI	R/C	Y	R/C	Y	1	N	N	R/C	N	Y	N	N	N	N
22	D28	R110	VLS	ATL1	SUM.HLAS.VYPN.ISTICA	KON ZAC	22	27	0	39	75	PV	SI	R/C	Y	R/C	Y	1	N	N	R/C	N	Y	N	N	N	N
23	D30	R110	VLS	ATL1	VYPINAC QM5	KON ZAC	22	27	0	39	75	PV	SI	R/C	N				N	N	R/C	Y	N	N	N	N	N
24	D32	R110	VLS	ATL1	VYPINAC QM6	KON ZAC	22	27	0	39	75	PV	SI	R/C	N				N	N	R/C	Y	N	N	N	N	N
25	Z18	R110	VLS	ATL2	VYPINAC QM1	KON ZAC	22	27	0	39	75	PV	SI	R/C	N				N	N	R/C	Y	N	N	N	N	N
26	Z20	R110	VLS	ATL2	VYPINAC QM2	KON ZAC	22	27	0	39	75	PV	SI	R/C	N				N	N	R/C	Y	N	N	N	N	N
27	Z22	R110	VLS	ATL2	VYPINAC QM3	KON ZAC	22	27	0	39	75	PV	SI	R/C	N				N	N	R/C	Y	N	N	N	N	N
28	Z24	R110	VLS	ATL2	VYPINAC QM4	KON ZAC	22	27	0	39	75	PV	SI	R/C	N				N	N	R/C	Y	N	N	N	N	N
29	Z26	R110	VLS	ATL3	VYPINAC QM7	KON ZAC	22	27	0	39	75	PV	SI	R/C	N				N	N	R/C	Y	N	N	N	N	N
30	Z28	R110	VLS	ATL3	VYPINAC QM8	KON ZAC	22	27	0	39	75	PV	SI	R/C	N				N	N	R/C	Y	N	N	N	N	N
31	Z30	R110	VLS	ATL3	POSOB.NADPAT.RELE NA W2	KON ZAC	22	27	0	39	75	PV	SI	R/C	Y	R/C	Y	1	N	N	R/C	N	Y	N	N	N	N
32	Z32	R110	VLS	ATL3	POSOB.PODPAT.RELE NA W2	KON ZAC	22	27	0	39	75	PV	SI	R/C	Y	R/C	Y	1	N	N	R/C	N	Y	N	N	N	N

Documentation structur: Standard
Source file: K050722.ODA

Date	22.07.2005	VSZ KOSICE	SIEMENS AG ISATOOLS
Drawn	LANG		
Appr.			
Remarks	Date	Name Norm	Orig./Repl. 1/Repl. by

Substation control system 6MB
Digital input module SINAUT LSA:
Input assignment
Table

T = /BD 67
+
-S103
Page

Station: UW KOSICE
Device: LZG
Module: DE2
Transducer addr.: 2

Packet number: 8
Version number: 3
Check SW status: No
SW status:
Check HW status: No
HW status:

HW filtering time for input 01 to 08: 08 ms
HW filtering time for input 09 to 16: 08 ms
HW filtering time for input 17 to 24: 08 ms
HW filtering time for input 25 to 32: 08 ms

Input	Connect designation	Command derivation
1	D2	Alarm 1 (Hupenbefehl)
2	D4	Alarm 1 (Hupenbefehl)
3	D6	Alarm 1 (Hupenbefehl)
4	D8	
5	D10	
6	D12	
7	D14	
8	D16	
9	Z2	
10	Z4	
11	Z6	
12	Z8	
13	Z10	Alarm 1 (Hupenbefehl)
14	Z12	Alarm 1 (Hupenbefehl)
15	Z14	Alarm 1 (Hupenbefehl)
16	Z16	Alarm 1 (Hupenbefehl)
17	D18	Alarm 1 (Hupenbefehl)
18	D20	Alarm 1 (Hupenbefehl)
19	D22	Alarm 1 (Hupenbefehl)
20	D24	Alarm 1 (Hupenbefehl)
21	D26	Alarm 1 (Hupenbefehl)
22	D28	Alarm 1 (Hupenbefehl)
23	D30	
24	D32	
25	Z18	
26	Z20	
27	Z22	
28	Z24	
29	Z26	
30	Z28	
31	Z30	Alarm 1 (Hupenbefehl)
32	Z32	Alarm 1 (Hupenbefehl)

Proprietary data, company confidential. All rights reserved.
Confie a tire de secret d'entreprise. Tous droits réservés.
Comunicado como segredo empresarial. Reservados todos os direitos.
Confiado como secreto industrial. Nos reservamos todos los derechos.
The reproduction, transmission or use of this document or its contents is not permitted without express written authority. Offenders will be liable for damages. All rights, including rights created by patent grant or registration of a utility model or design, are reserved.

Documentation structure: Standard
Source file: KO050722.ODA

Rev.	Remarks	Date	Name	Date	22.07.2005
				Drawn	LANG
				Appr.	
				Norm	

VSZ KOSICE
Orig./Repl. 1/Repl. by

SIEMENS AG
ISA TOOLS

Substation control system 6MB
Digital input module SINAUT LSA:
Input assignment
Table

T = /BD 68
+
-S103
Page 68

Station: UW KOSICE
Device: LZG
Module: DE3
Transducer addr.: 3

Packet number: 8
Version number: 3
Check SW status: No
SW status:
Check HW status: No
HW status:

HW filtering time for input 01 to 08: 08 ms
HW filtering time for input 09 to 16: 08 ms
HW filtering time for input 17 to 24: 08 ms
HW filtering time for input 25 to 32: 08 ms

Input	Connect designation	Section	Bay	Logical device	Lower limit	Value text		Column section	Column bay	Column logical device	Column information	Column value text	With command	Indication type	Entry in event list	Entry in alarm list	Acknowledge	Display in indication area	Indication class	Entry in SML	Display in diagram	Acknowledge	Display under voltage level	Indication class	Archive	Operational indications	Protection indications
1	D2																										
2	D4	R110	VLS ANL1		SUM.VYPN.POIST.220V	KON	ZAC	22	27	0	39	75	PV	SI	R/C	Y	R/C	Y	1	N	N				R/C	N	Y
3	D6	R110	VLS ANL1		SUM.VYPN.POIST.VYVOD UPS1	KON	ZAC	22	27	0	39	75	PV	SI	R/C	Y	R/C	Y	1	N	N				R/C	N	Y
4	D8	R110	VLS ANL1		SUM.VYPN.POIST.PRIV. UPS1	KON	ZAC	22	27	0	39	75	PV	SI	R/C	Y	R/C	Y	1	N	N				R/C	N	Y
5	D10	R110	VLS ANL1		SUM.VYPN.POIST.VYVODY	KON	ZAC	22	27	0	39	75	PV	SI	R/C	Y	R/C	Y	1	N	N				R/C	N	Y
6	D12	R110	VLS ANL1		SUM.HLAS.VYPN.ISTICA VYV.	KON	ZAC	22	27	0	39	75	PV	SI	R/C	Y	R/C	Y	1	N	N				R/C	N	Y
7	D14	R110	VLS ANL1		VYPINAC QM2-ANL	KON	ZAC	22	27	0	39	75	PV	SI	R/C	N				N	N				R/C	Y	N
8	D16	R110	VLS ANL1		VYPINAC QM2-UPS	KON	ZAC	22	27	0	39	75	PV	SI	R/C	N				N	N				R/C	Y	N
9	Z2	R110	VLS ANL1		SUM.VYPN.POIST.VYVOD UPS2	KON	ZAC	22	27	0	39	75	PV	SI	R/C	Y	R/C	Y	1	N	N				R/C	N	Y
10	Z4	R110	VLS ANL2		SUM.VYPN.POIST.PRIV.UPS2	KON	ZAC	22	27	0	39	75	PV	SI	R/C	Y	R/C	Y	1	N	N				R/C	N	Y
11	Z6	R110	VLS ANL2		SUM.VYPN.POIST.VYVODY	KON	ZAC	22	27	0	39	75	PV	SI	R/C	Y	R/C	Y	1	N	N				R/C	N	Y
12	Z8	R110	VLS ANL2		SUM.HLAS.VYPN.ISTICA VYV.	KON	ZAC	22	27	0	39	75	PV	SI	R/C	Y	R/C	Y	1	N	N				R/C	N	Y
13	Z10	R110	VLS ANL2		VYPINAC QM2-ANL	KON	ZAC	22	27	0	39	75	PV	SI	R/C	N				N	N				R/C	Y	N
14	Z12	R110	VLS ANL2		VYPINAC QM2-UPS	KON	ZAC	22	27	0	39	75	PV	SI	R/C	N				N	N				R/C	Y	N
15	Z14	R110	VLS UPS1		PORUCHA.	KON	ZAC	22	27	0	39	75	PV	SI	R/C	Y	R/C	Y	1	N	N				R/C	N	Y
16	Z16	R110	VLS UPS2		PORUCHA.	KON	ZAC	22	27	0	39	75	PV	SI	R/C	Y	R/C	Y	1	N	N				R/C	N	Y
17	D18	T10/20-1	POLE02	PROTILAHLY VYPINAC	SCHALTZUSTAND	vyp.		22	32	39	0	75	PV	DI	O					N	Y	N	Y	2	R	Y	N
18	D20	T10/20-1	POLE02	PROTILAHLY VYPINAC	SCHALTZUSTAND	zap.		22	32	39	0	75	PV	DI	O					N	Y	N	Y	2	R	Y	N
19	D22	T30-6	POLE04	PROTILAHLY VYPINAC	SCHALTZUSTAND	vyp.		22	32	39	0	75	PV	DI	O					N	Y	N	Y	2	R	Y	N
20	D24	T30-6	POLE04	PROTILAHLY VYPINAC	SCHALTZUSTAND	zap.		22	32	39	0	75	PV	DI	O					N	Y	N	Y	2	R	Y	N
21	D26	T05-13	POLE11	PROTILAHLY VYPINAC	SCHALTZUSTAND	vyp.		22	32	39	0	75	PV	DI	O					N	Y	N	Y	2	R	Y	N
22	D28	T05-13	POLE11	PROTILAHLY VYPINAC	SCHALTZUSTAND	zap.		22	32	39	0	75	PV	DI	O					N	Y	N	Y	2	R	Y	N
23	D30	T40-10	POLE17	PROTILAHLY VYPINAC	SCHALTZUSTAND	vyp.		22	32	39	0	75	PV	DI	O					N	Y	N	Y	2	R	Y	N
24	D32	T40-10	POLE17	PROTILAHLY VYPINAC	SCHALTZUSTAND	zap.		22	32	39	0	75	PV	DI	O					N	Y	N	Y	2	R	Y	N
25	Z18	T05-11	POLE20	PROTILAHLY VYPINAC	SCHALTZUSTAND	vyp.		22	32	39	0	75	PV	DI	O					N	Y	N	Y	2	R	Y	N
26	Z20	T05-11	POLE20	PROTILAHLY VYPINAC	SCHALTZUSTAND	zap.		22	32	39	0	75	PV	DI	O					N	Y	N	Y	2	R	Y	N
27	Z22	T50-27	POLE23	PROTILAHLY VYPINAC	SCHALTZUSTAND	vyp.		22	32	39	0	75	PV	DI	O					N	Y	N	Y	2	R	Y	N
28	Z24	T50-27	POLE23	PROTILAHLY VYPINAC	SCHALTZUSTAND	zap.		22	32	39	0	75	PV	DI	O					N	Y	N	Y	2	R	Y	N
29	Z26	R110	SPOL		NADRZ ZAOL.VODY NAPLN 60%	KON	ZAC	22	27	0	39	75	PV	SI	R/C	N				N	N				R/C	Y	N
30	Z28	R110	SPOL		NADRZ ZAOL.VODY NAPLN 80%	KON	ZAC	22	27	0	39	75	PV	SI	R/C	Y	R/C	Y	1	N	N				R/C	Y	Y
31	Z30	R110	SPOL		VYPNUTIE SYNCHRONIZACIE	KON	ZAC	22	27	0	39	75	PV	SI	R/C	N				N	Y	N	N		R/C	Y	N
32	Z32	R110	DE7 SPOL		STRATA NAPAJ.FAKTUR.MER.	KON	ZAC	22	27	0	39	75	PV	SI	R/C	Y	R/C	Y	1	N	N				R/C	Y	N

Proprietary data, company confidential. All rights reserved.
Confia a tire da secret d'entreprise. Tous droits reservis.
Comunicado como segredo empresarial. Reservados todos os direitos.
Confiado como secreto industrial. Nos reservamos todos los derechos.

The reproduction, transmission or use of this document or its is not permited without expres written authority.
Offenders will be liable for damages. All rights, including rights created by patent grant or registration of a utility model or design, are reserved

Documentation structure: Standard
Source file: KO050722.ODA

Date	22.07.2005	VSZ KOSICE	SIEMENS AG ISATOOLS
Drawn	LANG		
Appr.			
Remarks	Date	Name Norm	Orig./Repl. 1/Repl. by

Substation control system 6MB
Digital input module SINAUT LSA:
Input assignment
Table

T = /BD 69
+
-S103
Page

Proprietary data, company confidential. All rights reserved
Contains trade secret information. Total or partial reproduction is prohibited without written authority.
Comunicado como segredo empresarial. Reservados todos os direitos.
Confiado como secreto industrial. Nos reservamos todos los derechos.
The reproduction, transmission or use of this document or its contents is not permitted without written authority.
Offenders will be liable for damages. All rights, including rights created by patent grant or registration of a utility model or design, are reserved

Station: UW KOSICE
Device: LZG
Module: DE3
Transducer addr.: 3

Packet number: 8
Version number: 3
Check SW status: No
SW status:
Check HW status: No
HW status:

HW filtering time for input 01 to 08: 08 ms
HW filtering time for input 09 to 16: 08 ms
HW filtering time for input 17 to 24: 08 ms
HW filtering time for input 25 to 32: 08 ms

Input	Connect designation	Filt. of raised & cleared	Filtering of intermed. pos.	Bay blockage	With chatter disable	Monitored as feedback	Command derivation	Remote transmission FP: Master station	Remote transmission FP: Name of telegram	Remote transmission FP: Name of info element
1	D2									
2	D4	N		N	N	N	Alarm 1 (Hupenbefehl)			
3	D6	N		N	N	N	Alarm 1 (Hupenbefehl)			
4	D8	N		N	N	N	Alarm 1 (Hupenbefehl)			
5	D10	N		N	N	N	Alarm 1 (Hupenbefehl)			
6	D12	N		N	N	N	Alarm 1 (Hupenbefehl)			
7	D14	N		N	N	N				
8	D16	N		N	N	N				
9	Z2	N		N	N	N	Alarm 1 (Hupenbefehl)			
10	Z4	N		N	N	N	Alarm 1 (Hupenbefehl)			
11	Z6	N		N	N	N	Alarm 1 (Hupenbefehl)			
12	Z8	N		N	N	N	Alarm 1 (Hupenbefehl)			
13	Z10	N		N	N	N				
14	Z12	N		N	N	N				
15	Z14	N		N	N	N	Alarm 1 (Hupenbefehl)			
16	Z16	N		N	N	N	Alarm 1 (Hupenbefehl)			
17	D18	N	N	N	N	N		IEC 870-5-101	Meldungstelegramm DM	540
18	D20	N	N	N	N	N		IEC 870-5-101	Meldungstelegramm DM	540
19	D22	N	N	N	N	N		IEC 870-5-101	Meldungstelegramm DM	541
20	D24	N	N	N	N	N		IEC 870-5-101	Meldungstelegramm DM	541
21	D26	N	N	N	N	N		IEC 870-5-101	Meldungstelegramm DM	542
22	D28	N	N	N	N	N		IEC 870-5-101	Meldungstelegramm DM	542
23	D30	N	N	N	N	N		IEC 870-5-101	Meldungstelegramm DM	543
24	D32	N	N	N	N	N		IEC 870-5-101	Meldungstelegramm DM	543
25	Z18	N	N	N	N	N		IEC 870-5-101	Meldungstelegramm DM	544
26	Z20	N	N	N	N	N		IEC 870-5-101	Meldungstelegramm DM	544
27	Z22	N	N	N	N	N		IEC 870-5-101	Meldungstelegramm DM	545
28	Z24	N	N	N	N	N		IEC 870-5-101	Meldungstelegramm DM	545
29	Z26	N		N	N	N				
30	Z28	N		N	N	N	Alarm 1 (Hupenbefehl)			
31	Z30	N		N	N	N				
32	Z32	N		N	N	N	Alarm 1 (Hupenbefehl)			

Documentation structur: Standard
Source file: KO050722.ODA

Rev.	Remarks	Date	Name	Norm	Date 22.07.2005	Drawn LANG	Appr.	Orig./Repl. 1/Repl. by

VSZ KOSICE

SIEMENS AG
ISAOOLS

Substation control system 6MB
Digital input module SINAUT LSA:
Input assignment
Table

T = /BD 70
+
-S103
Page 70

Proprietary data, company confidential. All rights reserved.
Confidential de secret d'entreprise. Tous droits réservés.
Comunicado como segredo empresarial. Reservados todos os direitos.
Confiado como secreto industrial. Nos reservamos todos los derechos.

The reproduction, transmission or use of this document or its contents is not permitted without express written authority. Offenders will be liable for damages. All rights, including rights created by patent grant or registration of a utility model or design, are reserved.

Station: UW KOSICE
Device: LZG
Module: DE4
Transducer addr.: 4

Packet number: 8
Version number: 3
Check SW status: No
SW status:
Check HW status: No
HW status:

HW filtering time for input 01 to 08: 08 ms
HW filtering time for input 09 to 16: 08 ms
HW filtering time for input 17 to 24: 08 ms
HW filtering time for input 25 to 32: 08 ms

Input	Connect designation	Section	Bay	Logical device	Lower limit	Value text	Column section	Column bay	Column logical device	Column information	Column value text	With command	Indication type	Entry in event list	Entry in alarm list	Acknowledge	Display in indication area	Indication class	Entry in SML	Display in diagram	Acknowledge	Display under voltage level	Indication class	Archive	Operational indications	Protection indications	Filt. of raised & cleared	Filtering of intermed. pos.	Bay blockage
1	D2	T02-9	POLE09	PROTILAHLY VYPINAC	SCHALTZUSTAND	vyp.	22	32	39	0	75	PV	DI	O					N	Y	N	Y	2	R	Y	N	N	N	N
2	D4	T02-9	POLE09	PROTILAHLY VYPINAC	SCHALTZUSTAND	zap.	22	32	39	0	75	PV	DI	O					N	Y	N	Y	2	R	Y	N	N	N	N
3	D6	T02-3	POLE18	PROTILAHLY VYPINAC	SCHALTZUSTAND	vyp.	22	32	39	0	75	PV	DI	O					N	Y	N	Y	2	R	Y	N	N	N	N
4	D8	T02-3	POLE18	PROTILAHLY VYPINAC	SCHALTZUSTAND	zap.	22	32	39	0	75	PV	DI	O					N	Y	N	Y	2	R	Y	N	N	N	N
5	D10	T02-16	POLE19	PROTILAHLY VYPINAC	SCHALTZUSTAND	vyp.	22	32	39	0	75	PV	DI	O					N	Y	N	Y	2	R	Y	N	N	N	N
6	D12	T02-16	POLE19	PROTILAHLY VYPINAC	SCHALTZUSTAND	zap.	22	32	39	0	75	PV	DI	O					N	Y	N	Y	2	R	Y	N	N	N	N
7	D14	R110	U01		POZIARNY POPLACH	KON ZAC	22	27	0	39	75	PV	SI	R/C	Y	R/C	Y	1	N	N				R/C	Y	Y	N		N
8	D16	R110	U02		POZIARNY POPLACH	KON ZAC	22	27	0	39	75	PV	SI	R/C	Y	R/C	Y	1	N	N				R/C	Y	Y	N		N
9	Z2	R110	U03		POZIARNY POPLACH	KON ZAC	22	27	0	39	75	PV	SI	R/C	Y	R/C	Y	1	N	N				R/C	Y	Y	N		N
10	Z4																												
11	Z6	T??-??	POLE21	PROTILAHLY VYPINAC	SCHALTZUSTAND	vyp.	22	32	39	0	75	PV	DI	O					N	Y	N	Y	2	R	Y	N	N	N	N
12	Z8	T??-??	POLE21	PROTILAHLY VYPINAC	SCHALTZUSTAND	zap.	22	32	39	0	75	PV	DI	O					N	Y	N	Y	2	R	Y	N	N	N	N
13	Z10																												
14	Z12																												
15	Z14																												
16	Z16																												
17	D18																												
18	D20																												
19	D22																												
20	D24																												
21	D26																												
22	D28																												
23	D30																												
24	D32																												
25	Z18																												
26	Z20																												
27	Z22																												
28	Z24																												
29	Z26																												
30	Z28																												
31	Z30																												
32	Z32																												

Documentation structur: Standard
Source file: K0050722.ODA

Date	22.07.2005	VSZ KOSICE	SIEMENS AG ISATOOLS
Drawn	LANG		
Appr.			
Remarks	Date	Name Norm	Orig./Repl. 1/Repl. by

Substation control system 6MB
Digital input module SINAUT LSA:
Input assignment
Table

T = /BD 71
+
-S103
Page

Station: UW KOSICE
Device: LZG
Module: DE4
Transducer addr.: 4

Packet number: 8
Version number: 3
Check SW status: No
SW status:
Check HW status: No
HW status:

HW filtering time for input 01 to 08: 08 ms
HW filtering time for input 09 to 16: 08 ms
HW filtering time for input 17 to 24: 08 ms
HW filtering time for input 25 to 32: 08 ms

Input	Connect designation	With chatter disable	Monitored as feedback	Command derivation	Remote transmission FP: Master station	Name of telegram	Name of info element
1	D2	N	N		IEC 870-5-101	Meldungstelegramm DM	546
2	D4	N	N		IEC 870-5-101	Meldungstelegramm DM	546
3	D6	N	N		IEC 870-5-101	Meldungstelegramm DM	547
4	D8	N	N		IEC 870-5-101	Meldungstelegramm DM	547
5	D10	N	N		IEC 870-5-101	Meldungstelegramm DM	548
6	D12	N	N		IEC 870-5-101	Meldungstelegramm DM	548
7	D14	N	N	Alarm 1 (Hupenbefehl)			
8	D16	N	N	Alarm 1 (Hupenbefehl)			
9	Z2	N	N	Alarm 1 (Hupenbefehl)			
10	Z4						
11	Z6	N	N		IEC 870-5-101	Meldungstelegramm DM	549
12	Z8	N	N		IEC 870-5-101	Meldungstelegramm DM	549
13	Z10						
14	Z12						
15	Z14						
16	Z16						
17	D18						
18	D20						
19	D22						
20	D24						
21	D26						
22	D28						
23	D30						
24	D32						
25	Z18						
26	Z20						
27	Z22						
28	Z24						
29	Z26						
30	Z28						
31	Z30						
32	Z32						

Proprietary data, company confidential. All rights reserved
Confie a titre de secret d'entreprise. Tous droits réservés.
Comunicado como segredo empresarial. Reservados todos os direitos.
Confiado como secreto industrial. Nos reservamos todos los derechos.
The reproduction, transmission or use of this document or its is not permitted without expres written authority.
Offenders will be liable for damages. All rights, including rights created by patent grant or registration of a utility model or design, are reserved

Documentation structur: Standard
Source file: KO050722.ODA

Rev.	Remarks	Date	Name	Date 22.07.2005 / Drawn LANG / Appr. / Norm	VSZ KOSICE	SIEMENS AG ISATOOLS	Substation control system 6MB / Digital input module SINAUT LSA: / Input assignment / Table	T = /BD 72 / + / -S103	Page 72
					Orig./Repl. 1/Repl. by				

Device: LZG
Module: FP
Packet no.: 8
Version no.: 3

Telecontrol interface on: Communication processor 1, channel connection 1
With modem adapter: No
With extension module for clock management No

Communication processors				Channel connections				Telectrl connect.
Name	Number	Packet number	Version number	Name	Number	Channel functions as	IAWD modem connection	Telecontrol station
MC1	1	8	1	K1	1	Remote terminal interface	N	IEC 870-5-101
MC1	1	8	1	PC3	3			

Proprietary data, company confidential. All rights reserved
Confie a titre de secret d'entreprise. Tous droits réservés.
Comunicado como segredo empresarial. Reservados todos os direitos.
Confiado como secreto industrial. Nos reservamos todos los derechos.

The reproduction, transmission or use of this document or its is not permitted without expres written authority.
Offenders will be liable for damages. All rights, including rights created by patent grant or registration of a utility model or design, are reserved

Documentation structur: Standard
Source file: KO050722.ODA

				Date	22.07.2005	VSZ KOSICE	SIEMENS AG ISAOOLS	Substation control system 6MB Telecontrol processor unit	T = /BD 73
				Drawn	LANG				+
				Appr.				Table	-S103 Page 72
R	Remarks	Date	Name	Norm		Orig./Repl. 1/Repl. by			

Station:

Device D01 7UT513
Device type: 7UT51
Function type: 7UT51
Manufact.: SIEMENS

Packet number: 3
Version number: 0

Connection Device: D01 EAG
Subrack: BGT
Module: ESK01
Comm. processor:
Channel connection
UART: 2
MUX: 2

Function type	Info number	Section	Bay	Logical device	Lower limit	Value text	Column section	Column bay	Column logical device	Column information	Column value text	Indication type	Entry in event list	Entry in alarm list	Acknowledge	Display in indication area	Indication class	Entry in SML	Display in diagram	Archive	Operational indications	Protection indications
	19	R220	DA01	7UT513	NASTAVENIE LED ZOBR.		22	27	32	39	0	TR	O	N				N	N	R	N	Y
	22	R220	DA01	7UT513	PARAMETRIZACIA OCHRANY	KON ZAC	22	27	32	39	75	SI	R/C	N				N	N	R/C	N	Y
	23	R220	DA01	7UT513	PARAMETRIZ.AKT.SADA A	KON ZAC	22	27	32	39	75	SI	R/C	N				N	N	R/C	N	Y
	24	R220	DA01	7UT513	PARAMETRIZ.AKT.SADA B	KON ZAC	22	27	32	39	75	SI	R/C	N				N	N	R/C	N	Y
	25	R220	DA01	7UT513	PARAMETRIZ.AKT.SADA C	KON ZAC	22	27	32	39	75	SI	R/C	N				N	N	R/C	N	Y
	26	R220	DA01	7UT513	PARAMETRIZ.AKT.SADA D	KON ZAC	22	27	32	39	75	SI	R/C	N				N	N	R/C	N	Y
	27	R220	DA01	7UT513	OCHRANA NADOBY VYPNUTIE	KON ZAC	22	27	0	39	75	SI	N	N				N	N	N		
	68	R220	DA01	7UT513	DIF.O:VYP.IMPULZ		22	27	32	39		TR	O	Y	O	Y	1	N	N	R	N	Y
	86	R220	DA01	7UT513	DIF.O:VYP.IMP.L1		22	27	32	39		TR	O	Y	O	Y	1	N	N	R	N	Y
	87	R220	DA01	7UT513	DIF.O:VYP.IMP.L2		22	27	32	39		TR	O	Y	O	Y	1	N	N	R	N	Y
	88	R220	DA01	7UT513	DIF.O:VYP.IMP.L3		22	27	32	39		TR	O	Y	O	Y	1	N	N	R	N	Y
51	131	R220	DA01	7UT513	VAZBA 1 JE VYPNUTA	KON ZAC	22	27	32	39	75	SI	R/C	N				N	N	R/C	N	Y
51	133	R220	DA01	7UT513	VAZBA 1 V CINNOSTI	KON ZAC	22	27	32	39	75	SI	R/C	N				N	N	R/C	N	Y
51	136	R220	DA01	7UT513	VAZBA 1 POPUD	KON ZAC	22	27	32	39	78	SI	R/C	Y	R/C	Y	1	N	N	R/C	N	Y
51	137	R220	DA01	7UT513	VAZBA 1 VYP.IMPULZ		22	27	32	39		TR	O	Y	O	Y	1	N	N	R	N	Y
62	101	R220	DA01	7UT513	REZ.NADPR.O.VYPNUTA	KON ZAC	22	27	32	39	75	SI	R/C	N				N	N	R/C	N	Y
62	102	R220	DA01	7UT513	REZ.NADPR.O.BLOKOV.	KON ZAC	22	27	32	39	75	SI	R/C	N				N	N	R/C	N	Y
62	103	R220	DA01	7UT513	REZ.NADPR.O. V CINN.	KON ZAC	22	27	32	39	75	SI	R/C	N				N	N	R/C	N	Y
62	111	R220	DA01	7UT513	REZ.GEN.POPUD		22	27	32	39		TR	O	Y	O	Y	1	N	N	R	N	Y
62	112	R220	DA01	7UT513	REZ.POPUD V L1	KON ZAC	22	27	32	39	78	SI	R/C	Y	R/C	Y	1	N	N	R/C	N	Y
62	113	R220	DA01	7UT513	REZ.POPUD V L2	KON ZAC	22	27	32	39	78	SI	R/C	Y	R/C	Y	1	N	N	R/C	N	Y
62	114	R220	DA01	7UT513	REZ.POPUD V L3	KON ZAC	22	27	32	39	78	SI	R/C	Y	R/C	Y	1	N	N	R/C	N	Y
62	121	R220	DA01	7UT513	REZ.POPUD SKRAT.ST.		22	27	32	39		TR	O	Y	O	Y	1	N	N	R	N	Y
62	122	R220	DA01	7UT513	REZ.POPUD NADPR.ST.		22	27	32	39		TR	O	Y	O	Y	1	N	N	R	N	Y
62	141	R220	DA01	7UT513	REZ.SKRAT.O.CAS		22	27	32	39		TR	O	Y	O	Y	1	N	N	R	N	Y
62	142	R220	DA01	7UT513	REZ.NADPR.O.CAS		22	27	32	39		TR	O	Y	O	Y	1	N	N	R	N	Y
62	151	R220	DA01	7UT513	REZ.GEN.VYP.IMPULZ		22	27	32	39		TR	O	Y	O	Y	1	N	N	R	N	Y
75	15	R220	DA01	7UT513	DIF.O:VYPNUTA	KON ZAC	22	27	32	39	75	SI	R/C	N				N	N	R/C	N	Y
75	16	R220	DA01	7UT513	DIF.O:BLOKOVANA	KON ZAC	22	27	32	39	75	SI	R/C	N				N	N	R/C	N	Y
75	17	R220	DA01	7UT513	DIF.O:V CINNOSTI	KON ZAC	22	27	32	39	75	SI	R/C	N				N	N	R/C	N	Y
75	21	R220	DA01	7UT513	DIF.O: ONESK.IDIFF>		22	27	32	39		TR	O	Y	O	Y	1	N	N	R	N	Y
75	22	R220	DA01	7UT513	DIF.O: ONESK.IDIFF>>		22	27	32	39		TR	O	Y	O	Y	1	N	N	R	N	Y

Proprietary data, company confidential. All rights reserved
Confie a titre de secret d'entreprise. Tous droits s'en s.
Comunicado como segredo empresarial. Reservados todos os direitos.
Confiado como secreto industrial. Nos reservamos todos los derechos.
The reproduction, transmission or use of this document or its is not permitted without express written authority. Offenders will be liable for damages. All rights, including rights created by patent grant or registration of a utility model or design, are reserved

Documentation structur: Standard
Source file: KO050722.ODA

Rev.	Remarks	Date	Name	Norm
			Date	22.07.2005
			Drawn	LANG
			Appr.	

VSZ
KOSICE

Orig./Repl. 1/Repl. by

SIEMENS AG
ISATOOLS

Substation control system 6MB
Numerical protection device:
Indications
Table

T = /BE 1
+

-S104

Page 1

Proprietary data, company confidential. All rights reserved
Confiança ítra da secret d'entreprise. Tous droits réservés.
Comunicado como segredo empresarial. Reservados todos os direitos.
Confiado como secreto industrial. Nos reservamos todos los derechos.

The reproduction, transmission or use of this document or its
is not permitted without expres written authority.
Offenders will be liable for damages. All rights, including rights
created by patent grant or registration of a utility model or design, are reserved

Documentation structur: Standard
Source file: KO050722.ODA

Station:
Device D01 7UT513
Device type: 7UT51
Function type: 7UT51
Manufact.: SIEMENS

Packet number: 3
Version number: 0

Connection Device: D01 EAG
Subrack: BGT
Module: ESK01
Comm. processor:
Channel connection
UART: 2
MUX: 2

Function type	Info number	Command derivation	Indication derivation	Tel ctrl FP/SC	Command output
	19			N	N
	22			N	N
	23			N	N
	24			N	N
	25			N	N
	26			N	N
	27	Alarm 1 (Hupenbefehl)	POSBENI KOSTR.OCHR.	N	N
	68	Alarm 1 (Hupenbefehl)		N	N
	86	Alarm 1 (Hupenbefehl)		N	N
	87	Alarm 1 (Hupenbefehl)		N	N
	88	Alarm 1 (Hupenbefehl)		N	N
51	131			N	N
51	133			N	N
51	136	Alarm 1 (Hupenbefehl)		N	N
51	137	Alarm 1 (Hupenbefehl)		N	N
62	101			N	N
62	102			N	N
62	103			N	N
62	111	Alarm 1 (Hupenbefehl)		N	N
62	112	Alarm 1 (Hupenbefehl)		N	N
62	113	Alarm 1 (Hupenbefehl)		N	N
62	114	Alarm 1 (Hupenbefehl)		N	N
62	121	Alarm 1 (Hupenbefehl)		N	N
62	122	Alarm 1 (Hupenbefehl)		N	N
62	141	Alarm 1 (Hupenbefehl)		N	N
62	142	Alarm 1 (Hupenbefehl)		N	N
62	151	Alarm 1 (Hupenbefehl)		N	N
75	15			N	N
75	16			N	N
75	17			N	N
75	21	Alarm 1 (Hupenbefehl)		N	N
75	22	Alarm 1 (Hupenbefehl)		N	N

Date 22.07.2005
Drawn LANG
Appr.
Norm
Orig./Repl. 1/Repl. by

VSZ
KOSICE

SIEMENS AG
ISATOOLS

Substation control system 6MB
Numerical protection device:
Indications
Table

T = /BE 2
+
-S104
Page

Remarks | Date | Name

Proprietary data, company confidential. All rights reserved
Confie a tire de secret d'entreprise. Tous droits r.servis
Comunicado como segredo empresarial. Reservados todos os direitos.
Confiado como secreto industrial. Nos reservamos todos los derechos.
The reproduction, transmission or use of this document or its
is not permitted without expres written authority.
Offenders will be liable for damages. All rights, including rights
created by patent grant or registration of a utility model or design, are reserved

Station:
Device D01 7UT513
Device type: 7UT51
Function type: 7UT51
Manufact.: SIEMENS

Packet number: 3
Version number: 0

Connection Device: D01 EAG
Subrack: BGT
Module: ESK01
Comm. processor:
Channel connection
UART: 2
MUX: 2

Function type	Info number	Section	Bay	Logical device	Lower limit	Value text		Column section	Column bay	Column logical device	Column information	Column value text	Indication type	Entry in event list	Entry in alarm list	Acknowledge	Display in indication area	Indication class	Entry in SML	Display in diagram	Archive	Operational indications	Protection indications
75	31	R220	DA01	7UT513	DIF.O:GEN.POPUD	KON	ZAC	22	27	32	39	78	SI	R/C	Y	R/C	Y	1	N	N	R/C	N	Y
75	81	R220	DA01	7UT513	DIF.O:NADPR.VYP.IMP.L1	KON	ZAC	22	27	32	39	78	SI	R/C	Y	R/C	Y	1	N	N	R/C	N	Y
75	82	R220	DA01	7UT513	DIF.O:NADPR.VYP.IMP.L2	KON	ZAC	22	27	32	39	78	SI	R/C	Y	R/C	Y	1	N	N	R/C	N	Y
75	83	R220	DA01	7UT513	DIF.O:NADPR.VYP.IMP.L3	KON	ZAC	22	27	32	39	78	SI	R/C	Y	R/C	Y	1	N	N	R/C	N	Y
75	84	R220	DA01	7UT513	DIF.O:SKRAT.VYP.IMP.L1	KON	ZAC	22	27	32	39	78	SI	R/C	Y	R/C	Y	1	N	N	R/C	N	Y
75	85	R220	DA01	7UT513	DIF.O:SKRAT.VYP.IMP.L2	KON	ZAC	22	27	32	39	78	SI	R/C	Y	R/C	Y	1	N	N	R/C	N	Y
75	86	R220	DA01	7UT513	DIF.O:SKRAT.VYP.IMP.L3	KON	ZAC	22	27	32	39	78	SI	R/C	Y	R/C	Y	1	N	N	R/C	N	Y
75	91	R220	DA01	7UT513	DIF.O:NADPR.ST.VYP.IMP			22	27	32	39		TR	O	Y	O	Y	1	N	N	R	N	Y
75	92	R220	DA01	7UT513	DIF.O:SKRAT.ST.VYP.IMP			22	27	32	39		TR	O	Y	O	Y	1	N	N	R	N	Y
135	81	R220	DA01	7UT513	OCHRANA PRIPRAVENA	KON	ZAC	22	27	32	39	75	SI	R/C	N				N	N	R/C	N	Y
135	130	R220	DA01	7UT513	BUFER SIGN. PREPLNENY			22	27	32	39	0	TR	O	N				N	N	R	N	Y
135	131	R220	DA01	7UT513	STRATA SIGN. PRE LSA			22	27	32	39	0	TR	O	N				N	N	R	N	Y
135	166	R220	DA01	7UT513	PORUCHA V/V JEDN.C.1	KON	ZAC	22	27	32	39	75	SI	R/C	N				N	N	R/C	N	Y
135	167	R220	DA01	7UT513	PORUCHA V/V JEDN.C.2	KON	ZAC	22	27	32	39	75	SI	R/C	N				N	N	R/C	N	Y
135	231	R220	DA01	7UT513	PORUCHA V ENERG. SYST.	KON	ZAC	22	27	32	39	78	SI	R/C	Y	R/C	Y	1	N	N	R/C	N	Y
150	42	R220	DA01	7UT513	BUCHHOLZ VYPNUTIE	KON	ZAC	22	27	0	39	75	SI	R/C	Y	R/C	Y	1	N	N	R/C	N	Y
150	151	R220	DA01	7UT513	SUM.POSOBENIE OCHR.			22	27	32	39	0	TR	O	Y	O	Y	1	N	N	R	N	Y
150	152	R220	DA01	7UT513	SUM.ZRUS.POSOB.OCHR.			22	27	32	39	0	TR	O	Y	O	Y	1	N	N	R	N	Y
150	161	R220	DA01	7UT513	SUM.GEN.VYP.IMPULZ			22	27	32	39	0	TR	O	Y	O	Y	1	N	N	R	N	Y
167	61	R220	DA01	7UT513	O.PRETAZ.1 VYPNUTA	KON	ZAC	22	27	32	39	75	SI	R/C	N				N	N	R/C	N	Y
167	62	R220	DA01	7UT513	O.PRETAZ.1 BLOKOV.	KON	ZAC	22	27	32	39	75	SI	R/C	N				N	N	R/C	N	Y
167	63	R220	DA01	7UT513	O.PRETAZ.1 V CINN.	KON	ZAC	22	27	32	39	75	SI	R/C	N				N	N	R/C	N	Y
167	65	R220	DA01	7UT513	O.PRETAZ.1 PRUD.VYSTR	KON	ZAC	22	27	32	39	75	SI	R/C	N				N	N	R/C	N	Y
167	66	R220	DA01	7UT513	O.PRETAZ.1 TEPEL.VYSTR	KON	ZAC	22	27	32	39	75	SI	R/C	N				N	N	R/C	N	Y
167	71	R220	DA01	7UT513	O.PRETAZ.1 VYP.POVEL	KON	ZAC	22	27	32	39	78	SI	R/C	Y	R/C	Y	1	N	N	R/C	N	Y
167	111	R220	DA01	7UT513	O.PRETAZ.2 VYPNUTA	KON	ZAC	22	27	32	39	75	SI	R/C	N				N	N	R/C	N	Y
167	112	R220	DA01	7UT513	O.PRETAZ.2 BLOKOV.	KON	ZAC	22	27	32	39	75	SI	R/C	N				N	N	R/C	N	Y
167	113	R220	DA01	7UT513	O.PRETAZ.2 V CINN.	KON	ZAC	22	27	32	39	75	SI	R/C	N				N	N	R/C	N	Y
167	115	R220	DA01	7UT513	O.PRETAZ.2 PRUD.VYSTR	KON	ZAC	22	27	32	39	75	SI	R/C	N				N	N	R/C	N	Y
167	116	R220	DA01	7UT513	O.PRETAZ.2 TEPEL.VYSTR	KON	ZAC	22	27	32	39	75	SI	R/C	N				N	N	R/C	N	Y
167	121	R220	DA01	7UT513	O.PRETAZ.2 VYP.POVEL	KON	ZAC	22	27	32	39	78	SI	R/C	Y	R/C	Y	1	N	N	R/C	N	Y

Documentation structur: Standard
Source file: KO050722.ODA

Rev.	Remarks	Date	Name	Norm
			Date	22.07.2005
			Drawn	LANG
			Appr.	

Orig./Repl. 1/Repl. by

VSZ
KOSICE

SIEMENS AG
ISATOOLS

Substation control system 6MB
Numerical protection device:
Indications
Table

T = /BE 3
+
-S104
Page 3

Station:
Device D01 7UT513
Device type: 7UT51
Function type: 7UT51
Manufact.: SIEMENS

Packet number: 3
Version number: 0

Connection Device: D01 EAG
Subrack: BGT
Module: ESK01
Comm. processor:
Channel connection
UART: 2
MUX: 2

Function type	Info number	Command derivation	Indication derivation	Tel ctrl FP/SC	Command output
75	31	Alarm 1 (Hupenbefehl)		N	N
75	81	Alarm 1 (Hupenbefehl)		N	N
75	82	Alarm 1 (Hupenbefehl)		N	N
75	83	Alarm 1 (Hupenbefehl)		N	N
75	84	Alarm 1 (Hupenbefehl)		N	N
75	85	Alarm 1 (Hupenbefehl)		N	N
75	86	Alarm 1 (Hupenbefehl)		N	N
75	91	Alarm 1 (Hupenbefehl)		N	N
75	92	Alarm 1 (Hupenbefehl)		N	N
135	81			N	N
135	130			N	N
135	131			N	N
135	166			N	N
135	167			N	N
135	231	Alarm 1 (Hupenbefehl)		N	N
150	42	Alarm 1 (Hupenbefehl)		N	N
150	151	Alarm 1 (Hupenbefehl)		N	N
150	152	Alarm 1 (Hupenbefehl)		N	N
150	161	Alarm 1 (Hupenbefehl)		N	N
167	61			N	N
167	62			N	N
167	63			N	N
167	65			N	N
167	66			N	N
167	71	Alarm 1 (Hupenbefehl)		N	N
167	111			N	N
167	112			N	N
167	113			N	N
167	115			N	N
167	116			N	N
167	121	Alarm 1 (Hupenbefehl)		N	N

Proprietary data, company confidential. All rights reserved.
Confie a titre de secret d'entreprise. Tous droits reservés.
Comunicado como segredo empresarial. Reservados todos os direitos.
Confiado como secreto industrial. Nos reservamos todos los derechos.
The reproduction, transmission or use of this document or its is not permitted without expres written authority.
Offenders will be liable for damages. All rights, including rights created by patent grant or registration of a utility model or design, are reserved

Documentation structur: Standard
Source file: KO050722.ODA

			Date	22.07.2005	VSZ KOSICE
			Drawn	LANG	
			Appr.		
R	Remarks	Date	Name	Norm	Orig./Repl. 1/Repl. by

SIEMENS AG
ISA TOOLS

Substation control system 6MB
Numerical protection device:
Indications
Table

T = /BE 4
+
-S104
Page

Proprietary data, company confidential. All rights reserved
Confia a fine de secret d'entreprise. Tous droits reservés.
Comunicado como segredo empresarial. Reservados todos os direitos.
Confiado como secreto industrial. Nos reservamos todos los derechos.
The reproduction, transmission or use of this document or its contents is not permitted without express written authority.
Offenders will be liable for damages. All rights, including rights created by patent grant or registration of a utility model or design, are reserved

Station:

Device D02 7UT513
Device type: 7UT51
Function type: 7UT51
Manufact.: SIEMENS

Packet number: 3
Version number: 0

Connection Device: D02 EAG
Subrack: BGT
Module: ESK02
Comm. processor:
Channel connection
UART: 2
MUX: 2

Function type	Info number	Section	Bay	Logical device	Lower limit	Value text	Column section	Column bay	Column logical device	Column information	Column value text	Indication type	Entry in event list	Entry in alarm list	Acknowledge	Display in indication area	Indication class	Entry in SML	Display in diagram	Archive	Operational indications	Protection indications
	19	R220	DA02	7UT513	NASTAVENIE LED ZOBR.		22	27	32	39	0	TR	O	N				N	N	R	N	Y
	22	R220	DA02	7UT513	PARAMETRIZACIA OCHRANY	KON ZAC	22	27	32	39	75	SI	R/C	N				N	N	R/C	N	Y
	23	R220	DA02	7UT513	PARAMETRIZ.AKT.SADA A	KON ZAC	22	27	32	39	75	SI	R/C	N				N	N	R/C	N	Y
	24	R220	DA02	7UT513	PARAMETRIZ.AKT.SADA B	KON ZAC	22	27	32	39	75	SI	R/C	N				N	N	R/C	N	Y
	25	R220	DA02	7UT513	PARAMETRIZ.AKT.SADA C	KON ZAC	22	27	32	39	75	SI	R/C	N				N	N	R/C	N	Y
	26	R220	DA02	7UT513	PARAMETRIZ.AKT.SADA D	KON ZAC	22	27	32	39	75	SI	R/C	N				N	N	R/C	N	Y
	27	R220	DA02	7UT513	OCHRANA NADOBY VYPNUTIE	KON ZAC	22	27	0	39	75	SI	N	N				N	N	N		
	68	R220	DA02	7UT513	DIF.O:VYP.IMPULZ		22	27	32	39		TR	O	Y	O	Y	1	N	N	R	N	Y
	86	R220	DA02	7UT513	DIF.O:VYP.IMP.L1		22	27	32	39		TR	O	Y	O	Y	1	N	N	R	N	Y
	87	R220	DA02	7UT513	DIF.O:VYP.IMP.L2		22	27	32	39		TR	O	Y	O	Y	1	N	N	R	N	Y
	88	R220	DA02	7UT513	DIF.O:VYP.IMP.L3		22	27	32	39		TR	O	Y	O	Y	1	N	N	R	N	Y
51	131	R220	DA02	7UT513	VAZBA 1 JE VYPNUTA	KON ZAC	22	27	32	39	75	SI	R/C	N				N	N	R/C	N	Y
51	133	R220	DA02	7UT513	VAZBA 1 V CINNOSTI	KON ZAC	22	27	32	39	75	SI	R/C	N				N	N	R/C	N	Y
51	136	R220	DA02	7UT513	VAZBA 1 POPUD	KON ZAC	22	27	32	39	78	SI	R/C	Y	R/C	Y	1	N	N	R/C	N	Y
51	137	R220	DA02	7UT513	VAZBA 1 VYP.IMPULZ		22	27	32	39		TR	O	Y	O	Y	1	N	N	R	N	Y
62	101	R220	DA02	7UT513	REZ.NADPR.O.VYPNUTA	KON ZAC	22	27	32	39	75	SI	R/C	N				N	N	R/C	N	Y
62	102	R220	DA02	7UT513	REZ.NADPR.O.BLOKOV.	KON ZAC	22	27	32	39	75	SI	R/C	N				N	N	R/C	N	Y
62	103	R220	DA02	7UT513	REZ.NADPR.O. V CINN.	KON ZAC	22	27	32	39	75	SI	R/C	N				N	N	R/C	N	Y
62	111	R220	DA02	7UT513	REZ.GEN.POPUD		22	27	32	39		TR	O	Y	O	Y	1	N	N	R	N	Y
62	112	R220	DA02	7UT513	REZ.POPUD V L1	KON ZAC	22	27	32	39	78	SI	R/C	Y	R/C	Y	1	N	N	R/C	N	Y
62	113	R220	DA02	7UT513	REZ.POPUD V L2	KON ZAC	22	27	32	39	78	SI	R/C	Y	R/C	Y	1	N	N	R/C	N	Y
62	114	R220	DA02	7UT513	REZ.POPUD V L3	KON ZAC	22	27	32	39	78	SI	R/C	Y	R/C	Y	1	N	N	R/C	N	Y
62	121	R220	DA02	7UT513	REZ.POPUD SKRAT.ST.		22	27	32	39		TR	O	Y	O	Y	1	N	N	R	N	Y
62	122	R220	DA02	7UT513	REZ.POPUD NADPR.ST.		22	27	32	39		TR	O	Y	O	Y	1	N	N	R	N	Y
62	141	R220	DA02	7UT513	REZ.SKRAT.O.CAS		22	27	32	39		TR	O	Y	O	Y	1	N	N	R	N	Y
62	142	R220	DA02	7UT513	REZ.NADPR.O.CAS		22	27	32	39		TR	O	Y	O	Y	1	N	N	R	N	Y
62	151	R220	DA02	7UT513	REZ.GEN.VYP.IMPULZ		22	27	32	39		TR	O	Y	O	Y	1	N	N	R	N	Y
75	15	R220	DA02	7UT513	DIF.O:VYPNUTA	KON ZAC	22	27	32	39	75	SI	R/C	N				N	N	R/C	N	Y
75	16	R220	DA02	7UT513	DIF.O:BLOKOVANA	KON ZAC	22	27	32	39	75	SI	R/C	N				N	N	R/C	N	Y
75	17	R220	DA02	7UT513	DIF.O:V CINNOSTI	KON ZAC	22	27	32	39	75	SI	R/C	N				N	N	R/C	N	Y
75	21	R220	DA02	7UT513	DIF.O: ONESK.IDIFF>		22	27	32	39		TR	O	Y	O	Y	1	N	N	R	N	Y
75	22	R220	DA02	7UT513	DIF.O: ONESK.IDIFF>>		22	27	32	39		TR	O	Y	O	Y	1	N	N	R	N	Y

Documentation structur: Standard
Source file: KO050722.ODA

Rev.	Remarks	Date	Name	Norm	Date 22.07.2005	Drawn LANG	Appr.	VSZ KOSICE	Orig./Repl. 1/Repl. by

SIEMENS AG
ISATOOLS

Substation control system 6MB
Numerical protection device:
Indications
Table

T = /BE 5
+
-S104
Page 5

Station:
Device D02 7UT513
Device type: 7UT51
Function type: 7UT51
Manufact.: SIEMENS

Packet number: 3
Version number: 0

Connection Device: D02 EAG
Subrack: BGT
Module: ESK02
Comm. processor:
Channel connection
UART: 2
MUX: 2

Function type	Info number	Command derivation	Indication derivation	Tel ctrl FP/SC	Command output
	19			N	N
	22			N	N
	23			N	N
	24			N	N
	25			N	N
	26			N	N
	27	Alarm 1 (Hupenbefehl)	POSBENI KOSTR.OCHR.	N	N
	68	Alarm 1 (Hupenbefehl)		N	N
	86	Alarm 1 (Hupenbefehl)		N	N
	87	Alarm 1 (Hupenbefehl)		N	N
	88	Alarm 1 (Hupenbefehl)		N	N
51	131			N	N
51	133			N	N
51	136	Alarm 1 (Hupenbefehl)		N	N
51	137	Alarm 1 (Hupenbefehl)		N	N
62	101			N	N
62	102			N	N
62	103			N	N
62	111	Alarm 1 (Hupenbefehl)		N	N
62	112	Alarm 1 (Hupenbefehl)		N	N
62	113	Alarm 1 (Hupenbefehl)		N	N
62	114	Alarm 1 (Hupenbefehl)		N	N
62	121	Alarm 1 (Hupenbefehl)		N	N
62	122	Alarm 1 (Hupenbefehl)		N	N
62	141	Alarm 1 (Hupenbefehl)		N	N
62	142	Alarm 1 (Hupenbefehl)		N	N
62	151	Alarm 1 (Hupenbefehl)		N	N
75	15			N	N
75	16			N	N
75	17			N	N
75	21	Alarm 1 (Hupenbefehl)		N	N
75	22	Alarm 1 (Hupenbefehl)		N	N

Proprietary data, company confidential. All rights reserved.
Confie a titre de secret d'entreprise. Tous droits réservés.
Comunicado como segredo empresarial. Reservados todos os direitos.
Confiado como secreto industrial. Nos reservamos todos los derechos.
The reproduction, transmission or use of this document or its is not permitted without expres written authority.
Offenders will be liable for damages. All rights, including rights created by patent grant or registration of a utility model or design, are reserved

Documentation structur: Standard
Source file: KO050722.ODA

			Date	22.07.2005	VSZ KOSICE	SIEMENS AG ISA TOOLS	Substation control system 6MB
			Drawn	LANG			Numerical protection device:
			Appr.				Indications
R	Remarks	Date	Name	Norm	Orig./Repl. 1/Repl. by		Table

T = /BE 6
+
-S104
Page 6

Proprietary data, company confidential All rights reserved
Contrib a trzeba ochrany dle zákona č. 100/2001 Sb. Všechna práva vyhrazena
Contrato como segredo de empresa. Todos os direitos reservados
Contrato como secreto industrial. Nos reservamos todos los derechos
The reproduction, transmission or use of this document or its contents is not permitted without express written authority. Offenders will be liable for damages. All rights, including rights created by patent grant or registration of a utility model or design, are reserved

Station:

Device D02 7UT513
Device type: 7UT51
Function type: 7UT51
Manufact.: SIEMENS

Packet number: 3
Version number: 0

Connection Device: D02 EAG
Subrack: BGT
Module: ESK02
Comm. processor:
Channel connection
UART: 2
MUX: 2

Function type	Info number	Section	Bay	Logical device	Lower limit	Value text		Column section	Column bay	Column logical device	Column information	Column value text	Indication type	Entry in event list	Entry in alarm list	Acknowledge	Display in indication area	Indication class	Entry in SML	Display in diagram	Archive	Operational indications	Protection indications
75	31	R220	DA02	7UT513	DIF.O:GEN.POPUD	KON	ZAC	22	27	32	39	78	SI	R/C	Y	R/C	Y	1	N	N	R/C	N	Y
75	81	R220	DA02	7UT513	DIF.O:NADPR.VYP.IMP.L1	KON	ZAC	22	27	32	39	78	SI	R/C	Y	R/C	Y	1	N	N	R/C	N	Y
75	82	R220	DA02	7UT513	DIF.O:NADPR.VYP.IMP.L2	KON	ZAC	22	27	32	39	78	SI	R/C	Y	R/C	Y	1	N	N	R/C	N	Y
75	83	R220	DA02	7UT513	DIF.O:NADPR.VYP.IMP.L3	KON	ZAC	22	27	32	39	78	SI	R/C	Y	R/C	Y	1	N	N	R/C	N	Y
75	84	R220	DA02	7UT513	DIF.O:SKRAT.VYP.IMP.L1	KON	ZAC	22	27	32	39	78	SI	R/C	Y	R/C	Y	1	N	N	R/C	N	Y
75	85	R220	DA02	7UT513	DIF.O:SKRAT.VYP.IMP.L2	KON	ZAC	22	27	32	39	78	SI	R/C	Y	R/C	Y	1	N	N	R/C	N	Y
75	86	R220	DA02	7UT513	DIF.O:SKRAT.VYP.IMP.L3	KON	ZAC	22	27	32	39	78	SI	R/C	Y	R/C	Y	1	N	N	R/C	N	Y
75	91	R220	DA02	7UT513	DIF.O:NADPR.ST.VYP.IMP			22	27	32	39		TR	O	Y	O	Y	1	N	N	R	N	Y
75	92	R220	DA02	7UT513	DIF.O:SKRAT.ST.VYP.IMP			22	27	32	39		TR	O	Y	O	Y	1	N	N	R	N	Y
135	81	R220	DA02	7UT513	OCHRANA PRIPRAVENA	KON	ZAC	22	27	32	39	75	SI	R/C	N				N	N	R/C	N	Y
135	130	R220	DA02	7UT513	BUFER SIGN. PREPLNENY			22	27	32	39	0	TR	O	N				N	N	R	N	Y
135	131	R220	DA02	7UT513	STRATA SIGN. PRE LSA			22	27	32	39	0	TR	O	N				N	N	R	N	Y
135	166	R220	DA02	7UT513	PORUCHA V/V JEDN.C.1	KON	ZAC	22	27	32	39	75	SI	R/C	N				N	N	R/C	N	Y
135	167	R220	DA02	7UT513	PORUCHA V/V JEDN.C.2	KON	ZAC	22	27	32	39	75	SI	R/C	N				N	N	R/C	N	Y
135	231	R220	DA02	7UT513	PORUCHA V ENERG. SYST.	KON	ZAC	22	27	32	39	78	SI	R/C	Y	R/C	Y	1	N	N	R/C	N	Y
150	42	R220	DA02	7UT513	BUCHHOLZ VYPNUTIE	KON	ZAC	22	27	0	39	75	SI	R/C	Y	R/C	Y	1	N	N	R/C	N	Y
150	151	R220	DA02	7UT513	SUM.POSOBENIE OCHR.			22	27	32	39	0	TR	O	Y	O	Y	1	N	N	R	N	Y
150	152	R220	DA02	7UT513	SUM.ZRUS.POSOB.OCHR.			22	27	32	39	0	TR	O	Y	O	Y	1	N	N	R	N	Y
150	161	R220	DA02	7UT513	SUM.GEN.VYP.IMPULZ			22	27	32	39	0	TR	O	Y	O	Y	1	N	N	R	N	Y
167	61	R220	DA02	7UT513	O.PRETAZ.1 VYPNUTA	KON	ZAC	22	27	32	39	75	SI	R/C	N				N	N	R/C	N	Y
167	62	R220	DA02	7UT513	O.PRETAZ.1 BLOKOV.	KON	ZAC	22	27	32	39	75	SI	R/C	N				N	N	R/C	N	Y
167	63	R220	DA02	7UT513	O.PRETAZ.1 V CINN.	KON	ZAC	22	27	32	39	75	SI	R/C	N				N	N	R/C	N	Y
167	65	R220	DA02	7UT513	O.PRETAZ.1 PRUD.VYSTR	KON	ZAC	22	27	32	39	75	SI	R/C	N				N	N	R/C	N	Y
167	66	R220	DA02	7UT513	O.PRETAZ.1 TEPEL.VYSTR	KON	ZAC	22	27	32	39	75	SI	R/C	N				N	N	R/C	N	Y
167	71	R220	DA02	7UT513	O.PRETAZ.1 VYP.POVEL	KON	ZAC	22	27	32	39	78	SI	R/C	Y	R/C	Y	1	N	N	R/C	N	Y
167	111	R220	DA02	7UT513	O.PRETAZ.2 VYPNUTA	KON	ZAC	22	27	32	39	75	SI	R/C	N				N	N	R/C	N	Y
167	112	R220	DA02	7UT513	O.PRETAZ.2 BLOKOV.	KON	ZAC	22	27	32	39	75	SI	R/C	N				N	N	R/C	N	Y
167	113	R220	DA02	7UT513	O.PRETAZ.2 V CINN.	KON	ZAC	22	27	32	39	75	SI	R/C	N				N	N	R/C	N	Y
167	115	R220	DA02	7UT513	O.PRETAZ.2 PRUD.VYSTR	KON	ZAC	22	27	32	39	75	SI	R/C	N				N	N	R/C	N	Y
167	116	R220	DA02	7UT513	O.PRETAZ.2 TEPEL.VYSTR	KON	ZAC	22	27	32	39	75	SI	R/C	N				N	N	R/C	N	Y
167	121	R220	DA02	7UT513	O.PRETAZ.2 VYP.POVEL	KON	ZAC	22	27	32	39	78	SI	R/C	Y	R/C	Y	1	N	N	R/C	N	Y

Documentation structur: Standard
Source file: KO050722.ODA

Date	22.07.2005	VSZ KOSICE	SIEMENS AG ISATOOLS	Substation control system 6MB	T = /BE 7
Drawn	LANG			Numerical protection device:	+
Appr.				Indications	-S104 Page 7
Rev. Remarks	Date Name Norm	Orig./Repl. 1/Repl. by		Table	

Station:
Device D02 7UT513
Device type: 7UT51
Function type: 7UT51
Manufact.: SIEMENS

Packet number: 3
Version number: 0

Connection Device: D02 EAG
Subrack: BGT
Module: ESK02
Comm. processor:
Channel connection
UART: 2
MUX: 2

Function type	Info number	Command derivation	Indication derivation	Tel ctrl FP/SC	Command output
75	31	Alarm 1 (Hupenbefehl)		N	N
75	81	Alarm 1 (Hupenbefehl)		N	N
75	82	Alarm 1 (Hupenbefehl)		N	N
75	83	Alarm 1 (Hupenbefehl)		N	N
75	84	Alarm 1 (Hupenbefehl)		N	N
75	85	Alarm 1 (Hupenbefehl)		N	N
75	86	Alarm 1 (Hupenbefehl)		N	N
75	91	Alarm 1 (Hupenbefehl)		N	N
75	92	Alarm 1 (Hupenbefehl)		N	N
135	81			N	N
135	130			N	N
135	131			N	N
135	166			N	N
135	167			N	N
135	231	Alarm 1 (Hupenbefehl)		N	N
150	42	Alarm 1 (Hupenbefehl)		N	N
150	151	Alarm 1 (Hupenbefehl)		N	N
150	152	Alarm 1 (Hupenbefehl)		N	N
150	161	Alarm 1 (Hupenbefehl)		N	N
167	61			N	N
167	62			N	N
167	63			N	N
167	65			N	N
167	66			N	N
167	71	Alarm 1 (Hupenbefehl)		N	N
167	111			N	N
167	112			N	N
167	113			N	N
167	115			N	N
167	116			N	N
167	121	Alarm 1 (Hupenbefehl)		N	N

Proprietary data, company confidential. All rights reserved
Confie a titre de secret d'entreprise. Tous droits reservés.
Comunicado como segredo empresarial. Reservados todos os direitos.
Confiado como secreto industrial. Nos reservamos todos los derechos.
The reproduction, transmission or use of this document or its is not permitted without express written authority.
Offenders will be liable for damages. All rights, including rights created by patent grant or registration of a utility model or design, are reserved

Documentation structur: Standard
Source file: KO050722.ODA

Rc	Remarks	Date	Name	Date	22.07.2005	VSZ KOSICE	SIEMENS AG ISAOOLS	Substation control system 6MB
				Drawn	LANG			Numerical protection device:
				Appr.				Indications
				Norm		Orig./Repl. 1/Repl. by		Table

T = /BE 8
+
-S104
Page

Station:
Device DA01 7SA513
Device type: 7SA513
Function type: 7SA513
Manufact.: SIEMENS

Packet number: 3
Version number: 0

Connection Device: D01 EAG
Subrack: BGT
Module: ESK01
Comm. processor:
Channel connection
UART: 2
MUX: 3

Function type	Info number	Section	Bay	Logical device	Lower limit	Value text		Column section	Column bay	Column logical device	Column information	Column value text	Indication type	Entry in event list	Entry in alarm list	Acknowledge	Display in indication area	Indication class	Entry in SML	Display in diagram	Archive	Operational indications	Protection indications	Command derivation	Tel ctrl FP/SC	Command output
		R220	DA01	7SA513	DIST.O.:GEN.DETEK.POR.	KON	ZAC	22	27	32	39	78	SI	R/C	Y	R/C	Y	1	N	N	R/C	N	Y	Alarm 1 (Hupenbefehl)	N	N
		R220	DA01	7SA513	NUDZ.NADR.O.AKTIVNA	KON	ZAC	22	27	32	39	75	SI	R/C	N				N	N	R/C	N	Y		N	N
		R220	DA01	7SA513	GENERALNE VYPNUTIE			22	27	32	39		TR	O	Y	O	Y	1	N	N	R	N	Y	Alarm 1 (Hupenbefehl)	N	N
		R220	DA01	7SA513	GENERALNY NABEH	KON	ZAC	22	27	32	39	78	SI	R/C	Y	R/C	Y	1	N	N	R/C	N	Y	Alarm 1 (Hupenbefehl)	N	N
	16	R220	DA01	7SA513	OZ: ZAPNUTY	KON	ZAC	22	27	32	39	75	SI	R/C	N				N	N	R/C	N	Y		N	N
	18	R220	DA01	7SA513	NIEKTORA Z OCHR.V.CINNOSTI	KON	ZAC	22	27	32	39	75	SI	R/C	N				N	N	R/C	N	Y		N	N
	19	R220	DA01	7SA513	NASTAVENIE LED ZOBR.			22	27	32	39	0	TR	O	N				N	N	R	N	Y		N	N
	20	R220	DA01	7SA513	BLOKOV.ZAZN.A.MER.FUNKCII	KON	ZAC	22	27	32	39	75	SI	R/C	N				N	N	R/C	N	Y		N	N
	21	R220	DA01	7SA513	TESTOVACI REZIM	KON	ZAC	22	27	32	39	75	SI	R/C	N				N	N	R/C	N	Y		N	N
	22	R220	DA01	7SA513	PARAMETRIZACIA OCHRANY	KON	ZAC	22	27	32	39	75	SI	R/C	N				N	N	R/C	N	Y		N	N
	23	R220	DA01	7SA513	PARAMETRIZ.AKT.SADA A	KON	ZAC	22	27	32	39	75	SI	R/C	N				N	N	R/C	N	Y		N	N
	24	R220	DA01	7SA513	PARAMETRIZ.AKT.SADA B	KON	ZAC	22	27	32	39	75	SI	R/C	N				N	N	R/C	N	Y		N	N
	25	R220	DA01	7SA513	PARAMETRIZ.AKT.SADA C	KON	ZAC	22	27	32	39	75	SI	R/C	N				N	N	R/C	N	Y		N	N
	26	R220	DA01	7SA513	PARAMETRIZ.AKT.SADA D	KON	ZAC	22	27	32	39	75	SI	R/C	N				N	N	R/C	N	Y		N	N
	27	R220	DA01	7SA513	NESUHLAS POLOV Q0	KON	ZAC	0	22	0	39	75	SI	R/C	N				N	N	R/C	N	Y		N	N
	32	R220	DA01	7SA513	KONTR.MER.HODN.PRUDOV	KON	ZAC	22	27	32	39	75	SI	R/C	N				N	N	R/C	N	Y		N	N
	33	R220	DA01	7SA513	KONTR.MER.HODN.NAPATI	KON	ZAC	22	27	32	39	75	SI	R/C	N				N	N	R/C	N	Y		N	N
	36	R220	DA01	7SA513	KONTROLA VYPIN.OBV.	KON	ZAC	22	27	32	39	75	SI	R/C	N				N	N	R/C	N	Y		N	N
	38	R220	DA01	7SA513	VYP.NAP.ISTICA-VYVOD	KON	ZAC	22	27	32	39	75	SI	R/C	N				N	N	R/C	N	Y		N	N
	47	R220	DA01	7SA513	GEN.VNUTOR.PORUCHA	KON	ZAC	22	27	32	39	75	SI	R/C	N				N	N	R/C	N	Y		N	N
	64	R220	DA01	7SA513	DIST.O.:DET.POR.FAZA L1	KON	ZAC	22	27	32	39	78	SI	R/C	Y	R/C	Y	1	N	N	R/C	N	Y	Alarm 1 (Hupenbefehl)	N	N
	65	R220	DA01	7SA513	DIST.O.:DET.POR.FAZA L2	KON	ZAC	22	27	32	39	78	SI	R/C	Y	R/C	Y	1	N	N	R/C	N	Y	Alarm 1 (Hupenbefehl)	N	N
	66	R220	DA01	7SA513	DIST.O.:DET.POR.FAZA L3	KON	ZAC	22	27	32	39	78	SI	R/C	Y	R/C	Y	1	N	N	R/C	N	Y	Alarm 1 (Hupenbefehl)	N	N
	67	R220	DA01	7SA513	DIST.O.:DET.POR.ZEMNA	KON	ZAC	22	27	32	39	78	SI	R/C	Y	R/C	Y	1	N	N	R/C	N	Y	Alarm 1 (Hupenbefehl)	N	N
	68	R220	DA01	7SA513	DIST.O.:GENER.VYPN.			22	27	32	39		TR	O	Y	O	Y	1	N	N	R	N	Y	Alarm 1 (Hupenbefehl)	N	N
	69	R220	DA01	7SA513	DIST.O.:JEDNOP.VYP.L1			22	27	32	39		TR	O	Y	O	Y	1	N	N	R	N	Y	Alarm 1 (Hupenbefehl)	N	N
	70	R220	DA01	7SA513	DIST.O.:JEDNOP.VYP.L2			22	27	32	39		TR	O	Y	O	Y	1	N	N	R	N	Y	Alarm 1 (Hupenbefehl)	N	N
	71	R220	DA01	7SA513	DIST.O.:JEDNOP.VYP.L3			22	27	32	39		TR	O	Y	O	Y	1	N	N	R	N	Y	Alarm 1 (Hupenbefehl)	N	N
	72	R220	DA01	7SA513	NUDZ.NADPR.O.GEN.VYPN.			22	27	32	39		TR	O	Y	O	Y	1	N	N	R	N	Y	Alarm 1 (Hupenbefehl)	N	N
	74	R220	DA01	7SA513	DIST.O.:DET.POR.VPRED			22	27	32	39		TR	O	Y	O	Y	1	N	N	R	N	Y	Alarm 1 (Hupenbefehl)	N	N
	75	R220	DA01	7SA513	DIST.O.:DET.POR.NAZAD			22	27	32	39		TR	O	Y	O	Y	1	N	N	R	N	Y	Alarm 1 (Hupenbefehl)	N	N
	78	R220	DA01	7SA513	DIST.O.:DOCAS.T1-Z1			22	27	32	39		TR	O	Y	O	Y	1	N	N	R	N	Y	Alarm 1 (Hupenbefehl)	N	N

Proprietary data, company confidential. All rights reserved
Confia a ltre da secret d'entreprise. Tous droits r.serv.s.
Comunicado como segredo empresarial. Reservados todos os direitos.
Confiado como secreto industrial. Nos reservamos todos los derechos
The reproduction, transmission or use of this document or its contents is not permitted without express written authority. Offenders will be liable for damages. All rights, including rights created by patent grant or registration of a utility model or design, are reserved.

Documentation structure: Standard
Source file: KO050722.ODA

Rev.	Remarks	Date	Name	Norm	Orig./Repl. 1/Repl. by
			Date	22.07.2005	VSZ KOSICE
			Drawn	LANG	
			Appr.		

SIEMENS AG
SAOOLS

Substation control system 6MB
Numerical protection device:
Indications
Table

T = /BE 9
+
-S104

Station:

Device DA01 7SA513
Device type: 7SA513
Function type: 7SA513
Manufact.: SIEMENS

Packet number: 3
Version number: 0

Connection Device: D01 EAG
Subrack: BGT
Module: ESK01
Comm. processor:
Channel connection
UART: 2
MUX: 3

Function type	Info number	Section	Bay	Logical device	Lower limit	Value text	Column section	Column bay	Column logical device	Column information	Column value text	Indication type	Entry in event list	Entry in alarm list	Acknowledge	Display in indication area	Indication class	Entry in SML	Display in diagram	Archive	Operational indications	Protection indications	Command derivation	Tel ctrl FP/SC	Command output
	79	R220	DA01	7SA513	DIST.O.:DOCAS.T2-Z2		22	27	32	39		TR	O	Y	O	Y	1	N	N	R	N	Y	Alarm 1 (Hupenbefehl)	N	N
	80	R220	DA01	7SA513	DIST.O.:DOCAS.T3-Z3		22	27	32	39		TR	O	Y	O	Y	1	N	N	R	N	Y	Alarm 1 (Hupenbefehl)	N	N
	81	R220	DA01	7SA513	DIST.O.:DOCAS.T4		22	27	32	39		TR	O	Y	O	Y	1	N	N	R	N	Y	Alarm 1 (Hupenbefehl)	N	N
	82	R220	DA01	7SA513	DIST.O.:DOCAS.T5		22	27	32	39		TR	O	Y	O	Y	1	N	N	R	N	Y	Alarm 1 (Hupenbefehl)	N	N
	128	R220	DA01	7SA513	OZ: ZAPIN POVEL		22	27	32	39	0	TR	O	N				N	N	R	N	Y		N	N
25	71	R220	DA01	7SA513	ZAP. DO SKRATU-VYPN.	KON ZAC	22	27	32	39	75	SI	R/C	N				N	N	R/C	N	Y		N	N
25	72	R220	DA01	7SA513	ZAP. DO SKRATU-ZABL.	KON ZAC	22	27	32	39	75	SI	R/C	N				N	N	R/C	N	Y		N	N
25	73	R220	DA01	7SA513	ZAP. DO SKRATU-AKTIV.	KON ZAC	22	27	32	39	75	SI	R/C	N				N	N	R/C	N	Y		N	N
25	81	R220	DA01	7SA513	ZAP. DO SKRATU-GEN.DET.P	KON ZAC	22	27	32	39	78	SI	R/C	Y	R/C	Y	1	N	N	R/C	N	Y	Alarm 1 (Hupenbefehl)	N	N
25	95	R220	DA01	7SA513	ZAP. DO SKRATU-3F.VYP.	KON ZAC	22	27	32	39	78	SI	R/C	Y	R/C	Y	1	N	N	R/C	N	Y	Alarm 1 (Hupenbefehl)	N	N
28	51	R220	DA01	7SA513	DIST.OCHR.-VYPNUTA	KON ZAC	22	27	32	39	75	SI	R/C	N				N	N	R/C	N	Y		N	N
28	52	R220	DA01	7SA513	DIST.OCHR.-ZABLOKOV.	KON ZAC	22	27	32	39	75	SI	R/C	N				N	N	R/C	N	Y		N	N
28	53	R220	DA01	7SA513	DIST.OCHR.-V EINNOSTI	KON ZAC	22	27	32	39	75	SI	R/C	N				N	N	R/C	N	Y		N	N
28	180	R220	DA01	7SA513	DIST.O.:DOCAS.T1B-Z1B		22	27	32	39		TR	O	Y	O	Y	1	N	N	R	N	Y	Alarm 1 (Hupenbefehl)	N	N
28	183	R220	DA01	7SA513	DIST.O.:DOCAS.T1L-Z1L		22	27	32	39		TR	O	Y	O	Y	1	N	N	R	N	Y	Alarm 1 (Hupenbefehl)	N	N
28	205	R220	DA01	7SA513	DIST.O.:TROJPOL.VYP.		22	27	32	39		TR	O	Y	O	Y	1	N	N	R	N	Y	Alarm 1 (Hupenbefehl)	N	N
29	164	R220	DA01	7SA513	DETEK. KYVANIA V SIETI	KON ZAC	22	27	32	39	75	SI	R/C	N				N	N	R/C	N	Y		N	N
40	81	R220	DA01	7SA513	OZ. VYPNUTY	KON ZAC	22	27	32	39	75	SI	R/C	N				N	N	R/C	N	Y		N	N
40	87	R220	DA01	7SA513	OZ: VYPINAC NEPRIPRAVENY		22	27	32	39	0	TR	O	N				N	N	R	N	Y		N	N
40	101	R220	DA01	7SA513	OZ: V CINNOSTI	KON ZAC	22	27	32	39	78	SI	R/C	N				N	N	R/C	N	Y		N	N
40	113	R220	DA01	7SA513	OZ: 1P.PAUZA-RYCHLY OZ	KON ZAC	22	27	32	39	78	SI	R/C	N				N	N	R/C	N	Y		N	N
40	114	R220	DA01	7SA513	OZ: 3P.PAUZA-RYCHLY OZ	KON ZAC	22	27	32	39	78	SI	R/C	N				N	N	R/C	N	Y		N	N
40	162	R220	DA01	7SA513	OZ:USPESNY CYKLUS		22	27	32	39	0	TR	O	N				N	N	R	N	Y		N	N
40	163	R220	DA01	7SA513	OZ:DEFINIT.VYPNUTIE		22	27	32	39		TR	O	Y	O	Y	1	N	N	R	N	Y	Alarm 1 (Hupenbefehl)	N	N
61	51	R220	DA01	7SA513	NUDZ.NADPR.O.VYPN.	KON ZAC	22	27	32	39	75	SI	R/C	N				N	N	R/C	N	Y		N	N
61	52	R220	DA01	7SA513	NUDZ.NADPR.O.ZABLOK.	KON ZAC	22	27	32	39	75	SI	R/C	N				N	N	R/C	N	Y		N	N
61	61	R220	DA01	7SA513	NUDZ.NADPR.O.GEN.DET.P.	KON ZAC	22	27	32	39	78	SI	R/C	Y	R/C	Y	1	N	N	R/C	N	Y	Alarm 1 (Hupenbefehl)	N	N
62	103	R220	DA01	7SA513	ZAL.NADPR.O. AKTIVNA	KON ZAC	22	27	32	39	75	SI	R/C	N				N	N	R/C	N	Y		N	N
62	105	R220	DA01	7SA513	ZAL.ZEMN.O. VYPNUTA	KON ZAC	22	27	32	39	75	SI	R/C	N				N	N	R/C	N	Y		N	N
62	106	R220	DA01	7SA513	ZAL.FAZOV.O.VYPNUTA	KON ZAC	22	27	32	39	75	SI	R/C	N				N	N	R/C	N	Y		N	N
62	111	R220	DA01	7SA513	ZAL.NADPR.O:GEN.DET.P.	KON ZAC	22	27	32	39	78	SI	R/C	Y	R/C	Y	1	N	N	R/C	N	Y	Alarm 1 (Hupenbefehl)	N	N
62	112	R220	DA01	7SA513	ZAL.NADPR.O:DET.POR.L1	KON ZAC	22	27	32	39	78	SI	R/C	Y	R/C	Y	1	N	N	R/C	N	Y	Alarm 1 (Hupenbefehl)	N	N

Proprietary data, company confidential. All rights reserved.
Confiado a fins de secret d'entreprise. Tous droits réservés.
Comunicado como segredo empresarial. Reservados todos os direitos.
Confiado como secreto industrial. Nos reservamos todos los derechos.
The reproduction, transmission or use of this document or its contents is not permitted without express written authority. Offenders will be liable for damages. All rights, including rights created by patent grant or registration of a utility model or design, are reserved.

Documentation structur: Standard
Source file: K0050722.ODA

Date	22.07.2005	VSZ KOSICE	SIEMENS AG ISATOOLS
Drawn	LANG		
Appr.			
Remarks	Date	Name Norm	Orig./Repl. 1/Repl. by

Substation control system 6MB
Numerical protection device:
Indications
Table

T = /BE 10
+

-S104

Proprietary data, company confidential. All rights reserved.
Confia a tire da secret dentreprise. Tous droits r.ser.v.s.
Comunicado como segredo empresarial. Reservados todos os direitos.
Confiado como secreto industrial. Nos reservamos todos los derechos.
The reproduction, transmission or use of this document or its is not permitted without expres written authority.
Offenders will be liable for damages. All rights, including rights created by patent grant or registration of a utility model or design, are reserved.

Station:
Device DA01 7SA513
Device type: 7SA513
Function type: 7SA513
Manufact.: SIEMENS

Packet number: 3
Version number: 0

Connection Device: D01 EAG
Subrack: BGT
Module: ESK01
Comm. processor:
Channel connection
UART: 2
MUX: 3

Function type	Info number	Section	Bay	Logical device	Lower limit	Value text	Column section	Column bay	Column logical device	Column information	Column value text	Indication type	Entry in event list	Entry in alarm list	Acknowledge	Display in indication area	Indication class	Entry in SML	Display in diagram	Archive	Operational indications	Protection indications	Command derivation	Tel ctrl FP/SC	Command output
62	113	R220	DA01	7SA513	ZAL.NADPR.O:DET.POR.L2	KON ZAC	22	27	32	39	78	SI	R/C	Y	R/C	Y	1	N	N	R/C	N	Y	Alarm 1 (Hupenbefehl)	N	N
62	114	R220	DA01	7SA513	ZAL.NADPR.O:DET.POR.L3	KON ZAC	22	27	32	39	78	SI	R/C	Y	R/C	Y	1	N	N	R/C	N	Y	Alarm 1 (Hupenbefehl)	N	N
62	115	R220	DA01	7SA513	ZAL.DETEK.ZEMNEJ POR.	KON ZAC	22	27	32	39	78	SI	R/C	Y	R/C	Y	1	N	N	R/C	N	Y	Alarm 1 (Hupenbefehl)	N	N
62	121	R220	DA01	7SA513	ZAL.NADPR.O:DET.POR.I>>	KON ZAC	22	27	32	39	78	SI	R/C	Y	R/C	Y	1	N	N	R/C	N	Y	Alarm 1 (Hupenbefehl)	N	N
62	122	R220	DA01	7SA513	ZAL.NADPR.O:DET.POR.I>/Ip	KON ZAC	22	27	32	39	78	SI	R/C	Y	R/C	Y	1	N	N	R/C	N	Y	Alarm 1 (Hupenbefehl)	N	N
62	125	R220	DA01	7SA513	ZAL.DET.ZEMN.POR.IE>>	KON ZAC	22	27	32	39	78	SI	R/C	Y	R/C	Y	1	N	N	R/C	N	Y	Alarm 1 (Hupenbefehl)	N	N
62	126	R220	DA01	7SA513	ZAL.DET.ZEMN.POR.IE>/IEp	KON ZAC	22	27	32	39	78	SI	R/C	Y	R/C	Y	1	N	N	R/C	N	Y	Alarm 1 (Hupenbefehl)	N	N
62	151	R220	DA01	7SA513	ZAL.NADPR.O.GEN.VYPN.		22	27	32	39		TR	O	Y	O	Y	1	N	N	R	N	Y	Alarm 1 (Hupenbefehl)	N	N
62	152	R220	DA01	7SA513	ZAL.NADPR.O.:1POL.-VYP.L1		22	27	32	39		TR	O	Y	O	Y	1	N	N	R	N	Y	Alarm 1 (Hupenbefehl)	N	N
62	153	R220	DA01	7SA513	ZAL.NADPR.O.:1POL.-VYP.L2		22	27	32	39		TR	O	Y	O	Y	1	N	N	R	N	Y	Alarm 1 (Hupenbefehl)	N	N
62	154	R220	DA01	7SA513	ZAL.NADPR.O.:1POL.-VYP.L3		22	27	32	39		TR	O	Y	O	Y	1	N	N	R	N	Y	Alarm 1 (Hupenbefehl)	N	N
62	155	R220	DA01	7SA513	ZAL.NADPR.OCHR:3POL.VYP		22	27	32	39		TR	O	Y	O	Y	1	N	N	R	N	Y	Alarm 1 (Hupenbefehl)	N	N
135	53	R220	DA01	7SA513	TESTBETRIEB	KON ZAC	22	27	32	39	75	SI	R/C	N				N	N	N				N	N
135	81	R220	DA01	7SA513	OCHRANA PRIPRAVENA	KON ZAC	22	27	32	39	75	SI	R/C	N				N	N	R/C	N	Y		N	N
135	130	R220	DA01	7SA513	BUFER SIGN. PREPLNENY		22	27	32	39	0	TR	O	N				N	N	R	N	Y		N	N
135	131	R220	DA01	7SA513	STRATA SIGN. PRE LSA		22	27	32	39	0	TR	O	N				N	N	R	N	Y		N	N
135	231	R220	DA01	7SA513	PORUCHA V ENERG.SYST.	KON ZAC	22	27	32	39	78	SI	R/C	N				N	N	R/C	N	Y		N	N
150	152	R220	DA01	7SA513	GENERALNY ODPAD		22	27	32	39		TR	O	Y	O	Y	1	N	N	R	N	Y	Alarm 1 (Hupenbefehl)	N	N
150	166	R220	DA01	7SA513	GENERALNE VYP.-DOPREDU	KON ZAC	22	27	32	39	78	SI	R/C	Y	R/C	Y	1	N	N	R/C	N	Y	Alarm 1 (Hupenbefehl)	N	N
150	167	R220	DA01	7SA513	GENERALNE VYP.-DOZADU	KON ZAC	22	27	32	39	78	SI	R/C	Y	R/C	Y	1	N	N	R/C	N	Y	Alarm 1 (Hupenbefehl)	N	N
150	212	R220	DA01	7SA513	POVEL RUE.ZAP.VYPINACA		22	27	32	39	0	TR	O	Y	O	Y	1	N	N	R	N	Y	Alarm 1 (Hupenbefehl)	N	N
151	19	R220	DA01	7SA513	VZDIAL.PORUCHY V km		22	27	32	39	0	NV	O	Y	O	Y	1	N	N	R	N	Y	Alarm 1 (Hupenbefehl)	N	N
166	31	R220	DA01	7SA513	ZEMNA OCHRANA VYPNUTA	KON ZAC	22	27	32	39	75	SI	R/C	N				N	N	R/C	N	Y		N	N
166	32	R220	DA01	7SA513	ZEMNA OCHRANA BLOKOVANA	KON ZAC	22	27	32	39	75	SI	R/C	N				N	N	R/C	N	Y		N	N
166	33	R220	DA01	7SA513	ZEMNA OCHRANA AKTIVNA	KON ZAC	22	27	32	39	75	SI	R/C	N				N	N	R/C	N	Y		N	N
166	61	R220	DA01	7SA513	VYPNUTIE ZEMN. OCHRANOU		22	27	32	39		TR	O	Y	O	Y	1	N	N	R	N	Y	Alarm 1 (Hupenbefehl)	N	N
166	62	R220	DA01	7SA513	ZEMNA OCHR: 1POL.-VYP.L1		22	27	32	39		TR	O	Y	O	Y	1	N	N	R	N	Y	Alarm 1 (Hupenbefehl)	N	N
166	63	R220	DA01	7SA513	ZEMNA OCHR: 1POL.-VYP.L2		22	27	32	39		TR	O	Y	O	Y	1	N	N	R	N	Y	Alarm 1 (Hupenbefehl)	N	N
166	64	R220	DA01	7SA513	ZEMNA OCHR: 1POL.-VYP.L3		22	27	32	39		TR	O	Y	O	Y	1	N	N	R	N	Y	Alarm 1 (Hupenbefehl)	N	N
166	65	R220	DA01	7SA513	ZEMNA OCHR: 3POL.-VYP		22	27	32	39		TR	O	Y	O	Y	1	N	N	R	N	Y	Alarm 1 (Hupenbefehl)	N	N

Documentation structur: Standard
Source file: KO050722.ODA

Date	22.07.2005	VSZ KOSICE	SIEMENS AG ISATOOLS
Drawn	LANG		
Appr.			
Norm		Orig./Repl. 1/Repl. by	

Substation control system 6MB
Numerical protection device:
Indications
Table

T = /BE 11
+
-S104
Page 11

Rev. | Remarks | Date | Name

Station:
Device DA01 7SJ512
Device type: 7SJ512
Function type: 7SJ512
Manufact.: SIEMENS

Packet number: 3
Version number: 0

Connection Device: D01 EAG
Subrack: BGT
Module: ESK01
Comm. processor:
Channel connection
UART: 2
MUX: 1

Function type	Info number	Section	Bay	Logical device	Lower limit	Value text	Column section	Column bay	Column logical device	Column information	Column value text	Indication type	Entry in event list	Entry in alarm list	Acknowledge	Display in indication area	Indication class	Entry in SML	Display in diagram	Archive	Operational indications	Protection indications	Command derivation	Tel ctrl FP/SC	Command output
	19	R220	DA01	7SJ512	NASTAVENIE LED ZOBR.		22	27	32	39	0	TR	O	N				N	N	R	N	Y		N	N
	22	R220	DA01	7SJ512	PARAMETRIZACIA OCHRANY	KON ZAC	22	27	32	39	75	SI	R/C	N				N	N	R/C	N	Y		N	N
	27	R220	DA01	7SJ512	ANWENDERDEF. MELDUNG 1	KON ZAC	22	27	32	39	75	SI	N	N				N	N	N				N	N
	28	R220	DA01	7SJ512	ANWENDERDEF. MELDUNG 2	KON ZAC	22	27	32	39	75	SI	N	N				N	N	N				N	N
	29	R220	DA01	7SJ512	ANWENDERDEF. MELDUNG 3	KON ZAC	22	27	32	39	75	SI	N	N				N	N	N				N	N
	30	R220	DA01	7SJ512	ANWENDERDEF. MELDUNG 4	KON ZAC	22	27	32	39	75	SI	N	N				N	N	N				N	N
	32	R220	DA01	7SJ512	PORUCHA MER. PRUDU	KON ZAC	22	27	32	39	75	SI	R/C	N				N	N	R/C	N	Y		N	N
	33	R220	DA01	7SJ512	PORUCHA MER.NAPATIA	KON ZAC	22	27	32	39	75	SI	R/C	N				N	N	R/C	N	Y		N	N
	36	R220	DA01	7SJ512	KONTROLA VYST.JEDN.	KON ZAC	22	27	32	39	75	SI	R/C	N				N	N	R/C	N	Y		N	N
	48	R220	DA01	7SJ512	ZEMNE SPOJENIE V L1	KON ZAC	22	27	32	39	75	SI	R/C	Y	R/C	Y	1	N	N	R/C	N	Y	Alarm 1 (Hupenbefehl)	N	N
	49	R220	DA01	7SJ512	ZEMNE SPOJENIE V L2	KON ZAC	22	27	32	39	75	SI	R/C	Y	R/C	Y	1	N	N	R/C	N	Y	Alarm 1 (Hupenbefehl)	N	N
	50	R220	DA01	7SJ512	ZEMNE SPOJENIE V L3	KON ZAC	22	27	32	39	75	SI	R/C	Y	R/C	Y	1	N	N	R/C	N	Y	Alarm 1 (Hupenbefehl)	N	N
	68	R220	DA01	7SJ512	NADPR.O.GEN.VYP.IMP		22	27	32	39		TR	O	Y	O	Y	1	N	N	R	N	Y	Alarm 1 (Hupenbefehl)	N	N
	74	R220	DA01	7SJ512	SUM.VYP.IMP.VPRED		22	27	32	39		TR	O	Y	O	Y	1	N	N	R	N	Y	Alarm 1 (Hupenbefehl)	N	N
	75	R220	DA01	7SJ512	SUM.VYP.IMP.VZAD		22	27	32	39		TR	O	Y	O	Y	1	N	N	R	N	Y	Alarm 1 (Hupenbefehl)	N	N
	84	R220	DA01	7SJ512	NADPR.OCHR.GEN.POPUD	KON ZAC	22	27	32	39	78	SI	R/C	Y	R/C	Y	1	N	N	R/C	N	Y	Alarm 1 (Hupenbefehl)	N	N
	90	R220	DA01	7SJ512	NADPR.OCHR.VYP.IMP2		22	27	32	39		TR	O	N				N	N	N				N	N
	91	R220	DA01	7SJ512	SKRAT.OCHR.VYP.IMP.		22	27	32	39		TR	O	Y	O	Y	1	N	N	R	N	Y	Alarm 1 (Hupenbefehl)	N	N
60	46	R220	DA01	7SJ512	SKRAT.OCHR.POPUD L1	KON ZAC	22	27	32	39	78	SI	R/C	Y	R/C	Y	1	N	N	R/C	N	Y	Alarm 1 (Hupenbefehl)	N	N
60	47	R220	DA01	7SJ512	SKRAT.OCHR.POPUD L2	KON ZAC	22	27	32	39	78	SI	R/C	Y	R/C	Y	1	N	N	R/C	N	Y	Alarm 1 (Hupenbefehl)	N	N
60	48	R220	DA01	7SJ512	SKRAT.OCHR.POPUD L3	KON ZAC	22	27	32	39	78	SI	R/C	Y	R/C	Y	1	N	N	R/C	N	Y	Alarm 1 (Hupenbefehl)	N	N
60	49	R220	DA01	7SJ512	SKRAT.OCHR.CAS		22	27	32	39		TR	O	Y	O	Y	1	N	N	R	N	Y	Alarm 1 (Hupenbefehl)	N	N
60	50	R220	DA01	7SJ512	NADPR.OCHR.POPUD L1	KON ZAC	22	27	32	39	78	SI	R/C	Y	R/C	Y	1	N	N	R/C	N	Y	Alarm 1 (Hupenbefehl)	N	N
60	51	R220	DA01	7SJ512	NADPR.OCHR.POPUD L2	KON ZAC	22	27	32	39	78	SI	R/C	Y	R/C	Y	1	N	N	R/C	N	Y	Alarm 1 (Hupenbefehl)	N	N
60	52	R220	DA01	7SJ512	NADPR.OCHR.POPUD L3	KON ZAC	22	27	32	39	78	SI	R/C	Y	R/C	Y	1	N	N	N			Alarm 1 (Hupenbefehl)	N	N
60	53	R220	DA01	7SJ512	NADPR.OCHR.CAS		22	27	32	39		TR	O	Y	O	Y	1	N	N	R	N	Y	Alarm 1 (Hupenbefehl)	N	N
63	21	R220	DA01	7SJ512	NADPR.SMER.POPUD L1	KON ZAC	22	27	32	39	78	SI	R/C	Y	R/C	Y	1	N	N	R/C	N	Y	Alarm 1 (Hupenbefehl)	N	N
63	22	R220	DA01	7SJ512	NADPR.SMER.POPUD L2	KON ZAC	22	27	32	39	78	SI	R/C	Y	R/C	Y	1	N	N	R/C	N	Y	Alarm 1 (Hupenbefehl)	N	N
63	23	R220	DA01	7SJ512	NADPR.SMER.POPUD L3	KON ZAC	22	27	32	39	78	SI	R/C	Y	R/C	Y	1	N	N	R/C	N	Y	Alarm 1 (Hupenbefehl)	N	N
63	24	R220	DA01	7SJ512	NADPR.SMER.OCHR.CAS		22	27	32	39		TR	O	Y	O	Y	1	N	N	R	N	Y	Alarm 1 (Hupenbefehl)	N	N
135	81	R220	DA01	7SJ512	OCHRANA PRIPRAVENA	KON ZAC	22	27	32	39	75	SI	R/C	N				N	N	R/C	N	Y		N	N
135	130	R220	DA01	7SJ512	BUFER SIGN. PREPLNENY		22	27	32	39	0	TR	O	N				N	N	R	N	Y		N	N

Proprietary data, company confidential. All rights reserved.
Confia a tina de secret d'entreprise. Tous droits réservés.
Comunicado como segredo empresarial. Reservados todos os direitos.
Confiado como secreto industrial. Nos reservamos todos los derechos.
The reproduction, transmission or use of this document or its contents is not permitted without expres written authority. Offenders will be liable for damages. All rights, including rights created by patent grant or registration of a utility model or design, are reserved.

Documentation structure: Standard
Source file: KO050722.ODA

Date	22.07.2005	VSZ KOSICE	SIEMENS AG ISATOOLS	Substation control system 6MB
Drawn	LANG			Numerical protection device:
Appr.				Indications
Norm				Table

Remarks | Date | Name | Orig./Repl. 1/Repl. by

T = /BE 12
+
-S104
Page

Proprietary data, company confidential. All rights reserved
Confia a ltre da secret d'entreprise. Tous droits r serv s.
Comunicado como segredo empresarial. Reservados todos os direitos.
Confiado como secreto industrial. Nos reservamos todos los derechos.

The reproduction, transmission or use of this document or its contents is not permitted without expres written authority. Offenders will be liable for damages. All rights, including rights created by patent grant or registration of a utility model or design, are reserved.

Station:

Device: DA01 7SJ512
Device type: 7SJ512
Function type: 7SJ512
Manufact.: SIEMENS

Packet number: 3
Version number: 0

Connection Device: D01 EAG
Subrack: BGT
Module: ESK01
Comm. processor:
Channel connection
UART: 2
MUX: 1

Function type	Info number	Section	Bay	Logical device	Lower limit	Value text	Column section	Column bay	Column logical device	Column information	Column value text	Indication type	Entry in event list	Entry in alarm list	Acknowledge	Display in indication area	Indication class	Entry in SML	Display in diagram	Archive	Operational indications	Protection indications	Command derivation	FP/SC	Command output
135	131	R220	DA01	7SJ512	STRATA SIGN. PRE LSA		22	27	32	39	0	TR	O	N				N	N	R	N	Y		N	N
135	170	R220	DA01	7SJ512	PORUCHA V/V JEDNOTKY	KON ZAC	22	27	32	39	75	SI	R/C	N				N	N	R/C	N	Y		N	N
135	231	R220	DA01	7SJ512	PORUCHA NAPAJ.OCHR.	KON ZAC	22	27	32	39	78	SI	R/C	Y	R/C	Y	1	N	N	R/C	N	Y	Alarm 1 (Hupenbefehl)	N	N
150	151	R220	DA01	7SJ512	SUM.POSOBENIE OCHR.		22	27	32	39	0	TR	O	Y	O	Y	1	N	N	R	N	Y	Alarm 1 (Hupenbefehl)	N	N
150	152	R220	DA01	7SJ512	SUM.ZRUS.POSOB.OCHR.		22	27	32	39	0	TR	O	Y	O	Y	1	N	N	R	N	Y	Alarm 1 (Hupenbefehl)	N	N
150	161	R220	DA01	7SJ512	SUM.GEN.VYP.IMPULZ		22	27	32	39	0	TR	O	Y	O	Y	1	N	N	R	N	Y	Alarm 1 (Hupenbefehl)	N	N
150	171	R220	DA01	7SJ512	VYPIN.PRUD. L1 I/In=		22	27	32	39	0	NV	O	Y	O	Y	1	N	N	R	N	Y	Alarm 1 (Hupenbefehl)	N	N
150	172	R220	DA01	7SJ512	VYPIN.PRUD. L2 I/In=		22	27	32	39	0	NV	O	Y	O	Y	1	N	N	R	N	Y	Alarm 1 (Hupenbefehl)	N	N
150	173	R220	DA01	7SJ512	VYPIN.PRUD. L3 I/In=		22	27	32	39	0	NV	O	Y	O	Y	1	N	N	R	N	Y	Alarm 1 (Hupenbefehl)	N	N
167	11	R220	DA01	7SJ512	O.PRETAZ. VYPNUTA	KON ZAC	22	27	32	39	75	SI	R/C	N				N	N	R/C	N	Y		N	N
167	12	R220	DA01	7SJ512	O.PRETAZ. BLOKOV.	KON ZAC	22	27	32	39	75	SI	R/C	N				N	N	R/C	N	Y		N	N
167	13	R220	DA01	7SJ512	O.PRETAZ. V CINNOSTI	KON ZAC	22	27	32	39	75	SI	R/C	N				N	N	R/C	N	Y		N	N
167	15	R220	DA01	7SJ512	O.PRETAZ. PRUD.VYSTR	KON ZAC	22	27	32	39	75	SI	R/C	N				N	N	R/C	N	Y		N	N
167	16	R220	DA01	7SJ512	O.PRETAZ. TEPEL.VYSTR	KON ZAC	22	27	32	39	75	SI	R/C	N				N	N	R/C	N	Y		N	N
167	21	R220	DA01	7SJ512	O.PRETAZ. VYP.POVEL		22	27	32	39		TR	O	N				N	N	R	N	Y		N	N

Documentation structur: Standard
Source file: K0050722.ODA

Rev.	Remarks	Date	Name	Norm	Date	22.07.2005	VSZ KOSICE	SIEMENS AG ISATOOLS	Substation control system 6MB Numerical protection device: Indications Table	T = /BE 13 + -S104 Page 13
					Drawn	LANG				
					Appr.					
							Orig./Repl. 1/Repl. by			

Proprietary data, company confidential. All rights reserved
Contiene datos de secret dentreprise. Tous droits reservés.
Comunicado como segredo empresarial. Reservados todos os direitos.
Confiado como secreto industrial. Nos reservamos todos los derechos.
The reproduction, transmission or use of this document or its
is not permitted without expres written authority.
Offenders will be liable for damages. All rights, including rights
created by patent grant or registration of a utility model or design, are reserved

Station:

Device DA02 7SA513
Device type: 7SA513
Function type: 7SA513
Manufact.: SIEMENS

Packet number: 3
Version number: 0

Connection Device: D02 EAG
Subrack: BGT
Module: ESK02
Comm. processor:
Channel connection
UART: 2
MUX: 3

Function type	Info number	Section	Bay	Logical device	Lower limit	Value text		Column section	Column bay	Column logical device	Column information	Column value text	Indication type	Entry in event list	Entry in alarm list	Acknowledge	Display in indication area	Indication class	Entry in SML	Display in diagram	Archive	Operational indications	Protection indications	Command derivation	FP/SC	Command output
		R220	DA02	7SA513	DIST.O.:GEN.DETEK.POR.	KON	ZAC	22	27	32	39	78	SI	R/C	Y	R/C	Y	1	N	N	R/C	N	Y	Alarm 1 (Hupenbefehl)	N	N
		R220	DA02	7SA513	NUDZ.NADR.O.AKTIVNA	KON	ZAC	22	27	32	39	75	SI	R/C	N				N	N	R/C	N	Y		N	N
		R220	DA02	7SA513	GENERALNE VYPNUTIE			22	27	32	39		TR	O	Y	O	Y	1	N	N	R	N	Y	Alarm 1 (Hupenbefehl)	N	N
		R220	DA02	7SA513	GENERALNY NABEH	KON	ZAC	22	27	32	39	78	SI	R/C	Y	R/C	Y	1	N	N	R/C	N	Y	Alarm 1 (Hupenbefehl)	N	N
	16	R220	DA02	7SA513	OZ: ZAPNUTY	KON	ZAC	22	27	32	39	75	SI	R/C	N				N	N	R/C	N	Y		N	N
	18	R220	DA02	7SA513	NIEKTORA Z OCHR.V.CINNOSTI	KON	ZAC	22	27	32	39	75	SI	R/C	N				N	N	R/C	N	Y		N	N
	19	R220	DA02	7SA513	NASTAVENIE LED ZOBR.			22	27	32	39	0	TR	O	N				N	N	R	N	Y		N	N
	20	R220	DA02	7SA513	BLOKOV.ZAZN.A.MER.FUNKCII	KON	ZAC	22	27	32	39	75	SI	R/C	N				N	N	R/C	N	Y		N	N
	21	R220	DA02	7SA513	TESTOVACI REZIM	KON	ZAC	22	27	32	39	75	SI	R/C	N				N	N	R/C	N	Y		N	N
	22	R220	DA02	7SA513	PARAMETRIZACIA OCHRANY	KON	ZAC	22	27	32	39	75	SI	R/C	N				N	N	R/C	N	Y		N	N
	23	R220	DA02	7SA513	PARAMETRIZ.AKT.SADA A	KON	ZAC	22	27	32	39	75	SI	R/C	N				N	N	R/C	N	Y		N	N
	24	R220	DA02	7SA513	PARAMETRIZ.AKT.SADA B	KON	ZAC	22	27	32	39	75	SI	R/C	N				N	N	R/C	N	Y		N	N
	25	R220	DA02	7SA513	PARAMETRIZ.AKT.SADA C	KON	ZAC	22	27	32	39	75	SI	R/C	N				N	N	R/C	N	Y		N	N
	26	R220	DA02	7SA513	PARAMETRIZ.AKT.SADA D	KON	ZAC	22	27	32	39	75	SI	R/C	N				N	N	R/C	N	Y		N	N
	27	R220	DA02	7SA513	NESUHLAS POLOV Q0	KON	ZAC	0	22	0	39	75	SI	R/C	N				N	N	R/C	N	Y		N	N
	32	R220	DA02	7SA513	KONTR.MER.HODN.PRUDOV	KON	ZAC	22	27	32	39	75	SI	R/C	N				N	N	R/C	N	Y		N	N
	33	R220	DA02	7SA513	KONTR.MER.HODN.NAPATI	KON	ZAC	22	27	32	39	75	SI	R/C	N				N	N	R/C	N	Y		N	N
	36	R220	DA02	7SA513	KONTROLA VYPIN.OBV.	KON	ZAC	22	27	32	39	75	SI	R/C	N				N	N	R/C	N	Y		N	N
	38	R220	DA02	7SA513	VYP.NAP.ISTICA-VYVOD	KON	ZAC	22	27	32	39	75	SI	R/C	N				N	N	R/C	N	Y		N	N
	47	R220	DA02	7SA513	GEN.VNUTOR.PORUCHA	KON	ZAC	22	27	32	39	75	SI	R/C	N				N	N	R/C	N	Y		N	N
	64	R220	DA02	7SA513	DIST.O.:DET.POR.FAZA L1	KON	ZAC	22	27	32	39	78	SI	R/C	Y	R/C	Y	1	N	N	R/C	N	Y	Alarm 1 (Hupenbefehl)	N	N
	65	R220	DA02	7SA513	DIST.O.:DET.POR.FAZA L2	KON	ZAC	22	27	32	39	78	SI	R/C	Y	R/C	Y	1	N	N	R/C	N	Y	Alarm 1 (Hupenbefehl)	N	N
	66	R220	DA02	7SA513	DIST.O.:DET.POR.FAZA L3	KON	ZAC	22	27	32	39	78	SI	R/C	Y	R/C	Y	1	N	N	R/C	N	Y	Alarm 1 (Hupenbefehl)	N	N
	67	R220	DA02	7SA513	DIST.O.:DET.POR.ZEMNA	KON	ZAC	22	27	32	39	78	SI	R/C	Y	R/C	Y	1	N	N	R/C	N	Y	Alarm 1 (Hupenbefehl)	N	N
	68	R220	DA02	7SA513	DIST.O.:GENER.VYPN.			22	27	32	39		TR	O	Y	O	Y	1	N	N	R	N	Y	Alarm 1 (Hupenbefehl)	N	N
	69	R220	DA02	7SA513	DIST.O.:JEDNOP.VYP.L1			22	27	32	39		TR	O	Y	O	Y	1	N	N	R	N	Y	Alarm 1 (Hupenbefehl)	N	N
	70	R220	DA02	7SA513	DIST.O.:JEDNOP.VYP.L2			22	27	32	39		TR	O	Y	O	Y	1	N	N	R	N	Y	Alarm 1 (Hupenbefehl)	N	N
	71	R220	DA02	7SA513	DIST.O.:JEDNOP.VYP.L3			22	27	32	39		TR	O	Y	O	Y	1	N	N	R	N	Y	Alarm 1 (Hupenbefehl)	N	N
	72	R220	DA02	7SA513	NUDZ.NADPR.O.GEN.VYPN.			22	27	32	39		TR	O	Y	O	Y	1	N	N	R	N	Y	Alarm 1 (Hupenbefehl)	N	N
	74	R220	DA02	7SA513	DIST.O.:DET.POR.VPRED			22	27	32	39		TR	O	Y	O	Y	1	N	N	R	N	Y	Alarm 1 (Hupenbefehl)	N	N
	75	R220	DA02	7SA513	DIST.O.:DET.POR.NAZAD			22	27	32	39		TR	O	Y	O	Y	1	N	N	R	N	Y	Alarm 1 (Hupenbefehl)	N	N
	78	R220	DA02	7SA513	DIST.O.:DOCAS.T1-Z1			22	27	32	39		TR	O	Y	O	Y	1	N	N	R	N	Y	Alarm 1 (Hupenbefehl)	N	N

Documentation structur: Standard
Source file: KO050722.ODA

Date	22.07.2005	VSZ KOSICE	SIEMENS AG ISAOOLS
Drawn	LANG		
Appr.			
Remarks	Date	Name Norm	Orig./Repl. 1/Repl. by

Substation control system 6MB
Numerical protection device:
Indications
Table

T = /BE 14
+
-S104
Page

Proprietary data, company confidential. All rights reserved
Copia a terceros de esta información, tanto en forma escrita como electrónica, no está permitida sin autorización escrita. Todos los derechos
Comunicado como segredo empresarial. Reservados os direitos.
Contido como secreto industrial. Nos reservamos todos los derechos
The reproduction, transmission or use of this document or its
contents is not permitted without express written authority.
Offenders will be liable for damages. All rights, including rights
created by patent grant or registration of a utility model or design, are reserved

Station:

Device DA02 7SA513
Device type: 7SA513
Function type: 7SA513
Manufact.: SIEMENS

Packet number: 3
Version number: 0

Connection Device: D02 EAG
Subrack: BGT
Module: ESK02
Comm. processor:
Channel connection
UART: 2
MUX: 3

Function type	Info number	Section	Bay	Logical device	Lower limit	Value text	Column section	Column bay	Column logical device	Column information	Column value text	Indication type	Entry in event list	Entry in alarm list	Acknowledge	Display in indication area	Indication class	Entry in SML	Display in diagram	Archive	Operational indications	Protection indications	Command derivation	FP/SC	Tel ctrl	Command output
	79	R220	DA02	7SA513	DIST.O.:DOCAS.T2-Z2		22	27	32	39		TR	O	Y	O	Y	1	N	N	R	N	Y	Alarm 1 (Hupenbefehl)	N		N
	80	R220	DA02	7SA513	DIST.O.:DOCAS.T3-Z3		22	27	32	39		TR	O	Y	O	Y	1	N	N	R	N	Y	Alarm 1 (Hupenbefehl)	N		N
	81	R220	DA02	7SA513	DIST.O.:DOCAS.T4		22	27	32	39		TR	O	Y	O	Y	1	N	N	R	N	Y	Alarm 1 (Hupenbefehl)	N		N
	82	R220	DA02	7SA513	DIST.O.:DOCAS.T5		22	27	32	39		TR	O	Y	O	Y	1	N	N	R	N	Y	Alarm 1 (Hupenbefehl)	N		N
	128	R220	DA02	7SA513	OZ: ZAPIN POVEL		22	27	32	39	0	TR	O	N				N	N	R	N	Y		N		N
25	71	R220	DA02	7SA513	ZAP. DO SKRATU-VYPN.	KON ZAC	22	27	32	39	75	SI	R/C	N				N	N	R/C	N	Y		N		N
25	72	R220	DA02	7SA513	ZAP. DO SKRATU-ZABL.	KON ZAC	22	27	32	39	75	SI	R/C	N				N	N	R/C	N	Y		N		N
25	73	R220	DA02	7SA513	ZAP. DO SKRATU-AKTIV.	KON ZAC	22	27	32	39	75	SI	R/C	N				N	N	R/C	N	Y		N		N
25	81	R220	DA02	7SA513	ZAP. DO SKRATU-GEN.DET.P	KON ZAC	22	27	32	39	78	SI	R/C	Y	R/C	Y	1	N	N	R/C	N	Y	Alarm 1 (Hupenbefehl)	N		N
25	95	R220	DA02	7SA513	ZAP. DO SKRATU-3F.VYP.	KON ZAC	22	27	32	39	78	SI	R/C	Y	R/C	Y	1	N	N	R/C	N	Y	Alarm 1 (Hupenbefehl)	N		N
28	51	R220	DA02	7SA513	DIST.OCHR.-VYPNUTA	KON ZAC	22	27	32	39	75	SI	R/C	N				N	N	R/C	N	Y		N		N
28	52	R220	DA02	7SA513	DIST.OCHR.-ZABLOKOV.	KON ZAC	22	27	32	39	75	SI	R/C	N				N	N	R/C	N	Y		N		N
28	53	R220	DA02	7SA513	DIST.OCHR.-V EINNOSTI	KON ZAC	22	27	32	39	75	SI	R/C	N				N	N	R/C	N	Y		N		N
28	180	R220	DA02	7SA513	DIST.O.:DOCAS.T1B-Z1B		22	27	32	39		TR	O	Y	O	Y	1	N	N	R	N	Y	Alarm 1 (Hupenbefehl)	N		N
28	183	R220	DA02	7SA513	DIST.O.:DOCAS.T1L-Z1L		22	27	32	39		TR	O	Y	O	Y	1	N	N	R	N	Y	Alarm 1 (Hupenbefehl)	N		N
28	205	R220	DA02	7SA513	DIST.O.:TROJPOL.VYP.		22	27	32	39		TR	O	Y	O	Y	1	N	N	R	N	Y	Alarm 1 (Hupenbefehl)	N		N
29	164	R220	DA02	7SA513	DETEK. KYVANIA V SIETI	KON ZAC	22	27	32	39	75	SI	R/C	N				N	N	R/C	N	Y		N		N
40	81	R220	DA02	7SA513	OZ. VYPNUTY	KON ZAC	22	27	32	39	75	SI	R/C	N				N	N	R/C	N	Y		N		N
40	87	R220	DA02	7SA513	OZ: VYPINAC NEPRIPRAVENY		22	27	32	39	0	TR	O	N				N	N	R	N	Y		N		N
40	101	R220	DA02	7SA513	OZ: V CINNOSTI	KON ZAC	22	27	32	39	78	SI	R/C	N				N	N	R/C	N	Y		N		N
40	113	R220	DA02	7SA513	OZ: 1P.PAUZA-RYCHLY OZ	KON ZAC	22	27	32	39	78	SI	R/C	N				N	N	R/C	N	Y		N		N
40	114	R220	DA02	7SA513	OZ: 3P.PAUZA-RYCHLY OZ	KON ZAC	22	27	32	39	78	SI	R/C	N				N	N	R/C	N	Y		N		N
40	162	R220	DA02	7SA513	OZ:USPESNY CYKLUS		22	27	32	39	0	TR	O	N				N	N	R	N	Y		N		N
40	163	R220	DA02	7SA513	OZ:DEFINIT.VYPNUTIE		22	27	32	39		TR	O	Y	O	Y	1	N	N	R	N	Y	Alarm 1 (Hupenbefehl)	N		N
61	51	R220	DA02	7SA513	NUDZ.NADPR.O.VYPN.	KON ZAC	22	27	32	39	75	SI	R/C	N				N	N	R/C	N	Y		N		N
61	52	R220	DA02	7SA513	NUDZ.NADPR.O.ZABLOK.	KON ZAC	22	27	32	39	75	SI	R/C	N				N	N	R/C	N	Y		N		N
61	61	R220	DA02	7SA513	NUDZ.NADPR.O.GEN.DET.P.	KON ZAC	22	27	32	39	78	SI	R/C	Y	R/C	Y	1	N	N	R/C	N	Y	Alarm 1 (Hupenbefehl)	N		N
62	103	R220	DA02	7SA513	ZAL.NADPR.O. AKTIVNA	KON ZAC	22	27	32	39	75	SI	R/C	N				N	N	R/C	N	Y		N		N
62	105	R220	DA02	7SA513	ZAL.ZEMN.O. VYPNUTA	KON ZAC	22	27	32	39	75	SI	R/C	N				N	N	R/C	N	Y		N		N
62	106	R220	DA02	7SA513	ZAL.FAZOV.O.VYPNUTA	KON ZAC	22	27	32	39	75	SI	R/C	N				N	N	R/C	N	Y		N		N
62	111	R220	DA02	7SA513	ZAL.NADPR.O:GEN.DET.P.	KON ZAC	22	27	32	39	78	SI	R/C	Y	R/C	Y	1	N	N	R/C	N	Y	Alarm 1 (Hupenbefehl)	N		N
62	112	R220	DA02	7SA513	ZAL.NADPR.O:DET.POR.L1	KON ZAC	22	27	32	39	78	SI	R/C	Y	R/C	Y	1	N	N	R/C	N	Y	Alarm 1 (Hupenbefehl)	N		N

Documentation structur: Standard
Source file: KO050722.ODA

Rev.	Remarks	Date	Name	Norm	Orig./Repl. 1/Repl. by
			Date	22.07.2005	VSZ KOSICE
			Drawn	LANG	
			Appr.		

SIEMENS AG
ISATOOLS

Substation control system 6MB
Numerical protection device:
Indications
Table

T = /BE 15
+
-S104
Page 15

Proprietary data, company confidential. All rights reserved
Confia a tire da secret d'entreprise. Tous droits reservs.
Comunicado como segredo empresarial. Reservados todos os direitos.
Confiado como secreto industrial. Nos reservamos todos los derechos.
The reproduction, transmission or use of this document or its is not permitted without expres written authority.
Offenders will be liable for damages. All rights, including rights created by patent grant or registration of a utility model or design, are reserved

Station:

Device DA02 7SA513
Device type: 7SA513
Function type: 7SA513
Manufact.: SIEMENS

Packet number: 3
Version number: 0

Connection Device: D02 EAG
Subrack: BGT
Module: ESK02
Comm. processor:
Channel connection
UART: 2
MUX: 3

Function type	Info number	Section	Bay	Logical device	Lower limit	Value text	Column section	Column bay	Column logical device	Column information	Column value text	Indication type	Entry in event list	Entry in alarm list	Acknowledge	Display in indication area	Indication class	Entry in SML	Display in diagram	Archive	Operational indications	Protection indications	Command derivation	Tel ctrl FP/SC	Command output
62	113	R220	DA02	7SA513	ZAL.NADPR.O:DET.POR.L2	KON ZAC	22	27	32	39	78	SI	R/C	Y	R/C	Y	1	N	N	R/C	N	Y	Alarm 1 (Hupenbefehl)	N	N
62	114	R220	DA02	7SA513	ZAL.NADPR.O:DET.POR.L3	KON ZAC	22	27	32	39	78	SI	R/C	Y	R/C	Y	1	N	N	R/C	N	Y	Alarm 1 (Hupenbefehl)	N	N
62	115	R220	DA02	7SA513	ZAL.DETEK.ZEMNEJ POR.	KON ZAC	22	27	32	39	78	SI	R/C	Y	R/C	Y	1	N	N	R/C	N	Y	Alarm 1 (Hupenbefehl)	N	N
62	121	R220	DA02	7SA513	ZAL.NADPR.O:DET.POR.I>>	KON ZAC	22	27	32	39	78	SI	R/C	Y	R/C	Y	1	N	N	R/C	N	Y	Alarm 1 (Hupenbefehl)	N	N
62	122	R220	DA02	7SA513	ZAL.NADPR.O:DET.POR.I>/Ip	KON ZAC	22	27	32	39	78	SI	R/C	Y	R/C	Y	1	N	N	R/C	N	Y	Alarm 1 (Hupenbefehl)	N	N
62	125	R220	DA02	7SA513	ZAL.DET.ZEMN.POR.IE>>	KON ZAC	22	27	32	39	78	SI	R/C	Y	R/C	Y	1	N	N	R/C	N	Y	Alarm 1 (Hupenbefehl)	N	N
62	126	R220	DA02	7SA513	ZAL.DET.ZEMN.POR.IE>/IEp	KON ZAC	22	27	32	39	78	SI	R/C	Y	R/C	Y	1	N	N	R/C	N	Y	Alarm 1 (Hupenbefehl)	N	N
62	151	R220	DA02	7SA513	ZAL.NADPR.O.GEN.VYPN.		22	27	32	39		TR	O	Y	O	Y	1	N	N	R	N	Y	Alarm 1 (Hupenbefehl)	N	N
62	152	R220	DA02	7SA513	ZAL.NADPR.O.:1POL.-VYP.L1		22	27	32	39		TR	O	Y	O	Y	1	N	N	R	N	Y	Alarm 1 (Hupenbefehl)	N	N
62	153	R220	DA02	7SA513	ZAL.NADPR.O.:1POL.-VYP.L2		22	27	32	39		TR	O	Y	O	Y	1	N	N	R	N	Y	Alarm 1 (Hupenbefehl)	N	N
62	154	R220	DA02	7SA513	ZAL.NADPR.O.:1POL.-VYP.L3		22	27	32	39		TR	O	Y	O	Y	1	N	N	R	N	Y	Alarm 1 (Hupenbefehl)	N	N
62	155	R220	DA02	7SA513	ZAL.NADPR.OCHR:3POL.VYP		22	27	32	39		TR	O	Y	O	Y	1	N	N	R	N	Y	Alarm 1 (Hupenbefehl)	N	N
135	53	R220	DA02	7SA513	TESTBETRIEB	KON ZAC	22	27	32	39	75	SI	R/C	N				N	N	N				N	N
135	81	R220	DA02	7SA513	OCHRANA PRIPRAVENA	KON ZAC	22	27	32	39	75	SI	R/C	N				N	N	R/C	N	Y		N	N
135	130	R220	DA02	7SA513	BUFER SIGN. PREPLNENY		22	27	32	39	0	TR	O	N				N	N	R	N	Y		N	N
135	131	R220	DA02	7SA513	STRATA SIGN. PRE LSA		22	27	32	39	0	TR	O	N				N	N	R	N	Y		N	N
135	231	R220	DA02	7SA513	PORUCHA V ENERG.SYST.	KON ZAC	22	27	32	39	78	SI	R/C	N				N	N	R/C	N	Y		N	N
150	152	R220	DA02	7SA513	GENERALNY ODPAD		22	27	32	39		TR	O	Y	O	Y	1	N	N	R	N	Y	Alarm 1 (Hupenbefehl)	N	N
150	166	R220	DA02	7SA513	GENERALNE VYP.-DOPREDU	KON ZAC	22	27	32	39	78	SI	R/C	Y	R/C	Y	1	N	N	R/C	N	Y	Alarm 1 (Hupenbefehl)	N	N
150	167	R220	DA02	7SA513	GENERALNE VYP.-DOZADU	KON ZAC	22	27	32	39	78	SI	R/C	Y	R/C	Y	1	N	N	R/C	N	Y	Alarm 1 (Hupenbefehl)	N	N
150	212	R220	DA02	7SA513	POVEL RUE.ZAP.VYPINACA		22	27	32	39	0	TR	O	Y	O	Y	1	N	N	R	N	Y	Alarm 1 (Hupenbefehl)	N	N
151	19	R220	DA02	7SA513	VZDIAL.PORUCHY V km		22	27	32	39	0	NV	O	Y	O	Y	1	N	N	R	N	Y	Alarm 1 (Hupenbefehl)	N	N
166	31	R220	DA02	7SA513	ZEMNA OCHRANA VYPNUTA	KON ZAC	22	27	32	39	75	SI	R/C	N				N	N	R/C	N	Y		N	N
166	32	R220	DA02	7SA513	ZEMNA OCHRANA BLOKOVANA	KON ZAC	22	27	32	39	75	SI	R/C	N				N	N	R/C	N	Y		N	N
166	33	R220	DA02	7SA513	ZEMNA OCHRANA AKTIVNA	KON ZAC	22	27	32	39	75	SI	R/C	N				N	N	R/C	N	Y		N	N
166	61	R220	DA02	7SA513	VYPNUTIE ZEMN. OCHRANOU		22	27	32	39		TR	O	Y	O	Y	1	N	N	R	N	Y	Alarm 1 (Hupenbefehl)	N	N
166	62	R220	DA02	7SA513	ZEMNA OCHR: 1POL.-VYP.L1		22	27	32	39		TR	O	Y	O	Y	1	N	N	R	N	Y	Alarm 1 (Hupenbefehl)	N	N
166	63	R220	DA02	7SA513	ZEMNA OCHR: 1POL.-VYP.L2		22	27	32	39		TR	O	Y	O	Y	1	N	N	R	N	Y	Alarm 1 (Hupenbefehl)	N	N
166	64	R220	DA02	7SA513	ZEMNA OCHR: 1POL.-VYP.L3		22	27	32	39		TR	O	Y	O	Y	1	N	N	R	N	Y	Alarm 1 (Hupenbefehl)	N	N
166	65	R220	DA02	7SA513	ZEMNA OCHR: 3POL.-VYP		22	27	32	39		TR	O	Y	O	Y	1	N	N	R	N	Y	Alarm 1 (Hupenbefehl)	N	N

Documentation structur: Standard
Source file: K0050722.ODA

Date	22.07.2005	VSZ KOSICE	SIEMENS AG ISATOOLS
Drawn	LANG		
Appr.			
Norm			

Substation control system 6MB
Numerical protection device:
Indications
Table

T = /BE 16
+
-S104
Page

Remarks | Date | Name | Orig./Repl. 1/Repl. by

Proprietary data, company confidential. All rights reserved
Confia a lítna da secret dentreprise. Tous droits reservés
Comunicado como segredo empresarial Reservados todos os direitos
Contado como secreto industrial Nos reservamos todos los derechos
The reproduction, transmission or use of this document or its
is not permitted without express written authority.
Offenders will be liable for damages. All rights, including rights
created by patent grant or registration of a utility model or design, are reserved

Station:

Device DA02 7SJ512
Device type: 7SJ512
Function type: 7SJ512
Manufact.: SIEMENS

Packet number: 3
Version number: 0

Connection Device: D02 EAG
Subrack: BGT
Module: ESK02
Comm. processor:
Channel connection
UART: 2
MUX: 1

Function type	Info number	Section	Bay	Logical device	Lower limit	Value text	Column section	Column bay	Column logical device	Column information	Column value text	Indication type	Entry in event list	Entry in alarm list	Acknowledge	Display in indication area	Indication class	Entry in SML	Display in diagram	Archive	Operational indications	Protection indications	Command derivation	FP/SC	Command output
	19	R220	DA02	7SJ512	NASTAVENIE LED ZOBR.		22	27	32	39	0	TR	O	N				N	N	R	N	Y		N	N
	22	R220	DA02	7SJ512	PARAMETRIZACIA OCHRANY	KON ZAC	22	27	32	39	75	SI	R/C	N				N	N	R/C	N	Y		N	N
	27	R220	DA02	7SJ512	ANWENDERDEF. MELDUNG 1	KON ZAC	22	27	32	39	75	SI	N	N				N	N	N				N	N
	28	R220	DA02	7SJ512	ANWENDERDEF. MELDUNG 2	KON ZAC	22	27	32	39	75	SI	N	N				N	N	N				N	N
	29	R220	DA02	7SJ512	ANWENDERDEF. MELDUNG 3	KON ZAC	22	27	32	39	75	SI	N	N				N	N	N				N	N
	30	R220	DA02	7SJ512	ANWENDERDEF. MELDUNG 4	KON ZAC	22	27	32	39	75	SI	N	N				N	N	N				N	N
	32	R220	DA02	7SJ512	PORUCHA MER. PRUDU	KON ZAC	22	27	32	39	75	SI	R/C	N				N	N	R/C	N	Y		N	N
	33	R220	DA02	7SJ512	PORUCHA MER.NAPATIA	KON ZAC	22	27	32	39	75	SI	R/C	N				N	N	R/C	N	Y		N	N
	36	R220	DA02	7SJ512	KONTROLA VYST.JEDN.	KON ZAC	22	27	32	39	75	SI	R/C	N				N	N	R/C	N	Y		N	N
	48	R220	DA02	7SJ512	ZEMNE SPOJENIE V L1	KON ZAC	22	27	32	39	75	SI	R/C	Y	R/C	Y	1	N	N	R/C	N	Y	Alarm 1 (Hupenbefehl)	N	N
	49	R220	DA02	7SJ512	ZEMNE SPOJENIE V L2	KON ZAC	22	27	32	39	75	SI	R/C	Y	R/C	Y	1	N	N	R/C	N	Y	Alarm 1 (Hupenbefehl)	N	N
	50	R220	DA02	7SJ512	ZEMNE SPOJENIE V L3	KON ZAC	22	27	32	39	75	SI	R/C	Y	R/C	Y	1	N	N	R/C	N	Y	Alarm 1 (Hupenbefehl)	N	N
	68	R220	DA02	7SJ512	NADPR.O.GEN.VYP.IMP		22	27	32	39		TR	O	Y	O	Y	1	N	N	R	N	Y	Alarm 1 (Hupenbefehl)	N	N
	74	R220	DA02	7SJ512	SUM.VYP.IMP.VPRED		22	27	32	39		TR	O	Y	O	Y	1	N	N	R	N	Y	Alarm 1 (Hupenbefehl)	N	N
	75	R220	DA02	7SJ512	SUM.VYP.IMP.VZAD		22	27	32	39		TR	O	Y	O	Y	1	N	N	R	N	Y	Alarm 1 (Hupenbefehl)	N	N
	84	R220	DA02	7SJ512	NADPR.OCHR.GEN.POPUD	KON ZAC	22	27	32	39	78	SI	R/C	Y	R/C	Y	1	N	N	R/C	N	Y	Alarm 1 (Hupenbefehl)	N	N
	90	R220	DA02	7SJ512	NADPR.OCHR.VYP.IMP2		22	27	32	39		TR	O	N				N	N	N				N	N
	91	R220	DA02	7SJ512	SKRAT.OCHR.VYP.IMP.		22	27	32	39		TR	O	Y	O	Y	1	N	N	R	N	Y	Alarm 1 (Hupenbefehl)	N	N
60	46	R220	DA02	7SJ512	SKRAT.OCHR.POPUD L1	KON ZAC	22	27	32	39	78	SI	R/C	Y	R/C	Y	1	N	N	R/C	N	Y	Alarm 1 (Hupenbefehl)	N	N
60	47	R220	DA02	7SJ512	SKRAT.OCHR.POPUD L2	KON ZAC	22	27	32	39	78	SI	R/C	Y	R/C	Y	1	N	N	R/C	N	Y	Alarm 1 (Hupenbefehl)	N	N
60	48	R220	DA02	7SJ512	SKRAT.OCHR.POPUD L3	KON ZAC	22	27	32	39	78	SI	R/C	Y	R/C	Y	1	N	N	R/C	N	Y	Alarm 1 (Hupenbefehl)	N	N
60	49	R220	DA02	7SJ512	SKRAT.OCHR.CAS		22	27	32	39		TR	O	Y	O	Y	1	N	N	R	N	Y	Alarm 1 (Hupenbefehl)	N	N
60	50	R220	DA02	7SJ512	NADPR.OCHR.POPUD L1	KON ZAC	22	27	32	39	78	SI	R/C	Y	R/C	Y	1	N	N	R/C	N	Y	Alarm 1 (Hupenbefehl)	N	N
60	51	R220	DA02	7SJ512	NADPR.OCHR.POPUD L2	KON ZAC	22	27	32	39	78	SI	R/C	Y	R/C	Y	1	N	N	R/C	N	Y	Alarm 1 (Hupenbefehl)	N	N
60	52	R220	DA02	7SJ512	NADPR.OCHR.POPUD L3	KON ZAC	22	27	32	39	78	SI	R/C	Y	R/C	Y	1	N	N	N			Alarm 1 (Hupenbefehl)	N	N
60	53	R220	DA02	7SJ512	NADPR.OCHR.CAS		22	27	32	39		TR	O	Y	O	Y	1	N	N	R	N	Y	Alarm 1 (Hupenbefehl)	N	N
63	21	R220	DA02	7SJ512	NADPR.SMER.POPUD L1	KON ZAC	22	27	32	39	78	SI	R/C	Y	R/C	Y	1	N	N	R/C	N	Y	Alarm 1 (Hupenbefehl)	N	N
63	22	R220	DA02	7SJ512	NADPR.SMER.POPUD L2	KON ZAC	22	27	32	39	78	SI	R/C	Y	R/C	Y	1	N	N	R/C	N	Y	Alarm 1 (Hupenbefehl)	N	N
63	23	R220	DA02	7SJ512	NADPR.SMER.POPUD L3	KON ZAC	22	27	32	39	78	SI	R/C	Y	R/C	Y	1	N	N	R/C	N	Y	Alarm 1 (Hupenbefehl)	N	N
63	24	R220	DA02	7SJ512	NADPR.SMER.OCHR.CAS		22	27	32	39		TR	O	Y	O	Y	1	N	N	R	N	Y	Alarm 1 (Hupenbefehl)	N	N
135	81	R220	DA02	7SJ512	OCHRANA PRIPRAVENA	KON ZAC	22	27	32	39	75	SI	R/C	N				N	N	R/C	N	Y		N	N
135	130	R220	DA02	7SJ512	BUFER SIGN. PREPLNENY		22	27	32	39	0	TR	O	N				N	N	R	N	Y		N	N

Documentation structur: Standard
Source file: KO050722.ODA

Rev.	Remarks	Date	Name	Norm	Date 22.07.2005	Drawn LANG	Appr.	VSZ KOSICE	Orig./Repl. 1/Repl. by

SIEMENS AG
ISATOOLS

Substation control system 6MB
Numerical protection device:
Indications
Table

T = /BE 17
+
-S104
Page 17

Station:

Device DA02 7SJ512
Device type: 7SJ512
Function type: 7SJ512
Manufact.: SIEMENS

Packet number: 3
Version number: 0

Connection Device: D02 EAG
Subrack: BGT
Module: ESK02
Comm. processor:
Channel connection
UART: 2
MUX: 1

Function type	Info number	Section	Bay	Logical device	Lower limit	Value text	Column section	Column bay	Column logical device	Column information	Column value text	Indication type	Entry in event list	Entry in alarm list	Acknowledge	Display in indication area	Indication class	Entry in SML	Display in diagram	Archive	Operational indications	Protection indications	Command derivation	Tel ctrl FP/SC	Command output
135	131	R220	DA02	7SJ512	STRATA SIGN. PRE LSA		22	27	32	39	0	TR	O	N				N	N	R	N	Y		N	N
135	170	R220	DA02	7SJ512	PORUCHA V/V JEDNOTKY	KON ZAC	22	27	32	39	75	SI	R/C	N				N	N	R/C	N	Y		N	N
135	231	R220	DA02	7SJ512	PORUCHA NAPAJ.OCHR.	KON ZAC	22	27	32	39	78	SI	R/C	Y	R/C	Y	1	N	N	R/C	N	Y	Alarm 1 (Hupenbefehl)	N	N
150	151	R220	DA02	7SJ512	SUM.POSOBENIE OCHR.		22	27	32	39	0	TR	O	Y	O	Y	1	N	N	R	N	Y	Alarm 1 (Hupenbefehl)	N	N
150	152	R220	DA02	7SJ512	SUM.ZRUS.POSOB.OCHR.		22	27	32	39	0	TR	O	Y	O	Y	1	N	N	R	N	Y	Alarm 1 (Hupenbefehl)	N	N
150	161	R220	DA02	7SJ512	SUM.GEN.VYP.IMPULZ		22	27	32	39	0	TR	O	Y	O	Y	1	N	N	R	N	Y	Alarm 1 (Hupenbefehl)	N	N
150	171	R220	DA02	7SJ512	VYPIN.PRUD. L1 I/In=		22	27	32	39	0	NV	O	Y	O	Y	1	N	N	R	N	Y	Alarm 1 (Hupenbefehl)	N	N
150	172	R220	DA02	7SJ512	VYPIN.PRUD. L2 I/In=		22	27	32	39	0	NV	O	Y	O	Y	1	N	N	R	N	Y	Alarm 1 (Hupenbefehl)	N	N
150	173	R220	DA02	7SJ512	VYPIN.PRUD. L3 I/In=		22	27	32	39	0	NV	O	Y	O	Y	1	N	N	R	N	Y	Alarm 1 (Hupenbefehl)	N	N
167	11	R220	DA02	7SJ512	O.PRETAZ. VYPNUTA	KON ZAC	22	27	32	39	75	SI	R/C	N				N	N	R/C	N	Y		N	N
167	12	R220	DA02	7SJ512	O.PRETAZ. BLOKOV.	KON ZAC	22	27	32	39	75	SI	R/C	N				N	N	R/C	N	Y		N	N
167	13	R220	DA02	7SJ512	O.PRETAZ. V CINNOSTI	KON ZAC	22	27	32	39	75	SI	R/C	N				N	N	R/C	N	Y		N	N
167	15	R220	DA02	7SJ512	O.PRETAZ. PRUD.VYSTR	KON ZAC	22	27	32	39	75	SI	R/C	N				N	N	R/C	N	Y		N	N
167	16	R220	DA02	7SJ512	O.PRETAZ. TEPEL.VYSTR	KON ZAC	22	27	32	39	75	SI	R/C	N				N	N	R/C	N	Y		N	N
167	21	R220	DA02	7SJ512	O.PRETAZ. VYP.POVEL		22	27	32	39		TR	O	N				N	N	R	N	Y		N	N

Proprietary data, company confidential. All rights reserved.
Confie a titre de secret d'entreprise. Tous droits reservés.
Comunicado como segredo empresarial. Reservados todos os direitos.
Confiado como secreto industrial. Nos reservamos todos los derechos.

The reproduction, transmission or use of this document or its is not permitted without express written authority.
Offenders will be liable for damages. All rights, including rights created by patent grant or registration of a utility model or design, are reserved

Documentation structur: Standard
Source file: KO050722.ODA

Rev	Remarks	Date	Name	Date	22.07.2005	VSZ KOSICE	SIEMENS AG ISAOOLS	Substation control system 6MB
				Drawn	LANG			Numerical protection device:
				Appr.				Indications
				Norm		Orig./Repl. 1/Repl. by		Table

T = /BE 18
+
-S104
Page

Proprietary data, company confidential. All rights reserved
Confia a ztíre de secret d'entreprise. Tous droits reservs.
Comunicado como segredo empresarial. Reservados todos os direitos.
Contado como secreto industrial. Nos reservamos todos los derechos.
The reproduction, transmission or use of this document or its is not permitted without express written authority. Offenders will be liable for damages. All rights, including rights created by patent grant or registration of a utility model or design, are reserved

Station:
Device EA02 7SD502
Device type: 7SD502/503
Function type: 7SD502/503
Manufact.: SIEMENS

Packet number: 3
Version number: 0

Connection Device: EA02 EAG
Subrack: EA02 7SD502
Module:
Comm. processor:
Channel connection
UART: 2
MUX:

Function type	Info number	Section	Bay	Logical device	Lower limit	Value text	Column section	Column bay	Column logical device	Column information	Column value text	Indication type	Entry in event list	Entry in alarm list	Acknowledge	Display in indication area	Indication class	Entry in SML	Display in diagram	Archive	Operational indications	Protection indications	Command derivation	Tel ctrl FP/SC	Command output
	19	R110	EA02	7SD502	NASTAVENIE LED ZOBR.		22	27	32	39	0	TR	O	N				N	N	R	N	Y		N	N
	22	R110	EA02	7SD502	PARAMETRIZACIA OCHRANY	KON ZAC	22	27	32	39	75	SI	R/C	N				N	N	R/C	N	Y		N	N
	23	R110	EA02	7SD502	PARAMETRIZ.AKT.SADA A	KON ZAC	22	27	32	39	75	SI	R/C	N				N	N	R/C	N	Y		N	N
	24	R110	EA02	7SD502	PARAMETRIZ.AKT.SADA B	KON ZAC	22	27	32	39	75	SI	R/C	N				N	N	R/C	N	Y		N	N
	25	R110	EA02	7SD502	PARAMETRIZ.AKT.SADA C	KON ZAC	22	27	32	39	75	SI	R/C	N				N	N	R/C	N	Y		N	N
	26	R110	EA02	7SD502	PARAMETRIZ.AKT.SADA D	KON ZAC	22	27	32	39	75	SI	R/C	N				N	N	R/C	N	Y		N	N
	27	R110	EA02	7SD502	POSOBENIE PLAST.OCHR	KON ZAC	22	27	32	39	75	SI	N	N				N	N	N				N	N
	68	R110	EA02	7SD502	DIF.O: VYP ST.IDIFF>		22	27	32	39		TR	O	Y	O	Y	1	N	N	R	N	Y	Alarm 1 (Hupenbefehl)	N	N
	84	R110	EA02	7SD502	DIF.O:GEN.POPUD	KON ZAC	22	27	32	39	78	SI	R/C	Y	R/C	Y	1	N	N	R/C	N	Y	Alarm 1 (Hupenbefehl)	N	N
51	111	R110	EA02	7SD502	VAZBA JE VYPNUTA	KON ZAC	22	27	32	39	75	SI	R/C	N				N	N	R/C	N	Y		N	N
51	113	R110	EA02	7SD502	VAZBA V CINNOSTI	KON ZAC	22	27	32	39	75	SI	R/C	N				N	N	R/C	N	Y		N	N
51	117	R110	EA02	7SD502	VAZBA VYP. IMPULZ	KON ZAC	22	27	32	39	78	SI	R/C	N				N	N	R/C	N	Y		N	N
62	6	R110	EA02	7SD502	REZ.BLOK.STUP.I>>	KON ZAC	22	27	32	39	75	SI	R/C	N				N	N	R/C	N	Y		N	N
62	7	R110	EA02	7SD502	REZ.BLOK.STUP.I>/Ip	KON ZAC	22	27	32	39	75	SI	R/C	N				N	N	R/C	N	Y		N	N
62	103	R110	EA02	7SD502	REZ. V. CINNOSTI	KON ZAC	22	27	32	39	75	SI	R/C	N				N	N	R/C	N	Y		N	N
62	111	R110	EA02	7SD502	REZ.GEN.POPUD		22	27	32	39		TR	O	Y	O	Y	1	N	N	R	N	Y	Alarm 1 (Hupenbefehl)	N	N
62	121	R110	EA02	7SD502	REZ.POPUD I>>		22	27	32	39		TR	O	Y	O	Y	1	N	N	R	N	Y	Alarm 1 (Hupenbefehl)	N	N
62	122	R110	EA02	7SD502	REZ.POPUD I>/Ip		22	27	32	39		TR	O	Y	O	Y	1	N	N	R	N	Y	Alarm 1 (Hupenbefehl)	N	N
62	141	R110	EA02	7SD502	REZ.SKRAT.CAS		22	27	32	39		TR	O	Y	O	Y	1	N	N	R	N	Y	Alarm 1 (Hupenbefehl)	N	N
62	142	R110	EA02	7SD502	REZ.NADPR.CAS		22	27	32	39		TR	O	Y	O	Y	1	N	N	R	N	Y	Alarm 1 (Hupenbefehl)	N	N
62	151	R110	EA02	7SD502	REZ.GEN.VYP.IMPULZ		22	27	32	39		TR	O	Y	O	Y	1	N	N	R	N	Y	Alarm 1 (Hupenbefehl)	N	N
92	17	R110	EA02	7SD502	DIF.O:V CINNOSTI	KON ZAC	22	27	32	39	75	SI	R/C	N				N	N	R/C	N	Y		N	N
93	11	R110	EA02	7SD502	DIAL.VYPINANIE VYPNUTE	KON ZAC	22	27	32	39	75	SI	R/C	N				N	N	R/C	N	Y		N	N
93	16	R110	EA02	7SD502	DIAL.VYP.IMP.VYSLANY	KON ZAC	22	27	32	39	75	SI	R/C	N				N	N	R/C	N	Y		N	N
93	41	R110	EA02	7SD502	VYP.PROTIST:VYPNUTE	KON ZAC	22	27	32	39	75	SI	R/C	N				N	N	R/C	N	Y		N	N
93	43	R110	EA02	7SD502	VYP.PROTIST.V.CINNOSTI	KON ZAC	22	27	32	39	75	SI	R/C	N				N	N	R/C	N	Y		N	N
93	46	R110	EA02	7SD502	VYP.PROTIS:POPUD	KON ZAC	22	27	32	39	78	SI	R/C	Y	R/C	Y	1	N	N	R/C	N	Y	Alarm 1 (Hupenbefehl)	N	N
93	47	R110	EA02	7SD502	VYP.PROTIS:VYP.IMP	KON ZAC	22	27	32	39	78	SI	R/C	Y	R/C	Y	1	N	N	R/C	N	Y	Alarm 1 (Hupenbefehl)	N	N
93	71	R110	EA02	7SD502	KONTR.PREN.CES.VYPNUTA	KON ZAC	22	27	32	39	75	SI	R/C	N				N	N	R/C	N	Y		N	N
93	76	R110	EA02	7SD502	POR.POM.PRENOS.CESTY	KON ZAC	22	27	32	39	75	SI	R/C	N				N	N	R/C	N	Y		N	N
135	81	R110	EA02	7SD502	OCHRANA PRIPRAVENA	KON ZAC	22	27	32	39	75	SI	R/C	N				N	N	R/C	N	Y		N	N
135	130	R110	EA02	7SD502	BUFER SIGN. PREPLNENY		22	27	32	39	0	TR	O	N				N	N	R	N	Y		N	N

Documentation structur: Standard
Source file: KO050722.ODA

Rev.	Remarks	Date	Name	Norm	
				Date	22.07.2005
				Drawn	LANG
				Appr.	
				Orig./Repl. 1/Repl. by	

VSZ
KOSICE

SIEMENS AG
ISAOOLS

Substation control system 6MB
Numerical protection device:
Indications
Table

T = /BE 19
+
-S104
Page 19

Station:

Device EA02 7SD502
Device type: 7SD502/503
Function type: 7SD502/503
Manufact.: SIEMENS

Packet number: 3
Version number: 0

Connection Device: EA02 EAG
Subrack: EA02 7SD502
Module:
Comm. processor:
Channel connection
UART: 2
MUX:

Function type	Info number	Section	Bay	Logical device	Lower limit	Value text	Column section	Column bay	Column logical device	Column information	Column value text	Indication type	Entry in event list	Entry in alarm list	Acknowledge	Display in indication area	Indication class	Entry in SML	Display in diagram	Archive	Operational indications	Protection indications	Command derivation	Tel ctrl FP/SC	Command output
135	131	R110	EA02	7SD502	STRATA SIGN. PRE LSA		22	27	32	39	0	TR	O	N				N	N	R	N	Y		N	N
135	166	R110	EA02	7SD502	PORUCHA V/V JEDN.C.1	KON ZAC	22	27	32	39	75	SI	R/C	N				N	N	R/C	N	Y		N	N
135	170	R110	EA02	7SD502	PORUCHA V/V JEDNOTKY	KON ZAC	22	27	32	39	75	SI	R/C	N				N	N	R/C	N	Y		N	N
135	231	R110	EA02	7SD502	PORUCHA NAPAJ.OCHR.	KON ZAC	22	27	32	39	78	SI	R/C	Y	R/C	Y	1	N	N	R/C	N	Y	Alarm 1 (Hupenbefehl)	N	N
150	152	R110	EA02	7SD502	SUM.ZRUS.POSOB.OCHR.		22	27	32	39	0	TR	O	Y	O	Y	1	N	N	R	N	Y	Alarm 1 (Hupenbefehl)	N	N
150	161	R110	EA02	7SD502	SUM.GEN.VYP.IMPULZ		22	27	32	39	0	TR	O	Y	O	Y	1	N	N	R	N	Y	Alarm 1 (Hupenbefehl)	N	N
167	13	R110	EA02	7SD502	O.PRETAZ:V CINNOSTI	KON ZAC	22	27	32	39	75	SI	R/C	N				N	N	R/C	N	Y		N	N
167	15	R110	EA02	7SD502	O.PRETAZ:PRUD.VYSTR	KON ZAC	22	27	32	39	75	SI	R/C	N				N	N	R/C	N	Y		N	N
167	16	R110	EA02	7SD502	O.PRETAZ:TEPEL.VYSTR.	KON ZAC	22	27	32	39	75	SI	R/C	N				N	N	R/C	N	Y		N	N
167	17	R110	EA02	7SD502	O.PRETAZ:POPUD	KON ZAC	22	27	32	39	75	SI	R/C	N				N	N	R/C	N	Y		N	N
167	21	R110	EA02	7SD502	O.PRETAZ:VYP.POVEL		22	27	32	39		TR	O	Y	O	Y	1	N	N	R	N	Y	Alarm 1 (Hupenbefehl)	N	N

Proprietary data, company confidential. All rights reserved.
Confie a titre de secret d'entreprise. Tous droits reservés.
Comunicado como segredo empresarial. Reservados todos os direitos.
Confiado como secreto industrial. Nos reservamos todos los derechos.
The reproduction, transmission or use of this document or its is not permitted without expres written authority.
Offenders will be liable for damages. All rights, including rights created by patent grant or registration of a utility model or design, are reserved

Documentation structur: Standard
Source file: KO050722.ODA

Rr	Remarks	Date	Name	Date	22.07.2005	VSZ KOSICE	SIEMENS AG SAIOOLS	Substation control system 6MB
				Drawn	LANG			Numerical protection device:
				Appr.				Indications
				Norm		Orig./Repl. 1/Repl. by		Table

T = /BE 20
+
-S104
Page

Station:

Device EA02 7SJ512
Device type: 7SJ512
Function type: 7SJ512
Manufact.: SIEMENS

Packet number: 3
Version number: 0

Connection Device: EA02 EAG
Subrack: EA02 7SJ512
Module:
Comm. processor:
Channel connection
UART: 2
MUX:

Function type	Info number	Section	Bay	Logical device	Lower limit	Value text	Column section	Column bay	Column logical device	Column information	Column value text	Indication type	Entry in event list	Entry in alarm list	Acknowledge	Display in indication area	Indication class	Entry in SML	Display in diagram	Archive	Operational indications	Protection indications	Command derivation	Indication derivation	Tel ctrl FP/SC
	19	R110	EA02	7SJ512	NASTAVENIE LED ZOBR.		22	27	32	39	0	TR	O	N				N	N	R	N	Y			N
	22	R110	EA02	7SJ512	PARAMETRIZACIA OCHRANY	KON ZAC	22	27	32	39	75	SI	R/C	N				N	N	R/C	N	Y			N
	27	R110	EA02	7SJ512	ANWENDERDEF. MELDUNG 1	KON ZAC	22	27	32	39	75	SI	N	N				N	N	N					N
	28	R110	EA02	7SJ512	ANWENDERDEF. MELDUNG 2	KON ZAC	22	27	32	39	75	SI	N	N				N	N	N					N
	29	R110	EA02	7SJ512	ANWENDERDEF. MELDUNG 3	KON ZAC	22	27	32	39	75	SI	N	N				N	N	N					N
	30	R110	EA02	7SJ512	ANWENDERDEF. MELDUNG 4	KON ZAC	22	27	32	39	75	SI	N	N				N	N	N				LA1 BUCHHOLZ	N
	32	R110	EA02	7SJ512	PORUCHA MER. PRUDU	KON ZAC	22	27	32	39	75	SI	R/C	N				N	N	R/C	N	Y			N
	33	R110	EA02	7SJ512	PORUCHA MER.NAPATIA	KON ZAC	22	27	32	39	75	SI	R/C	N				N	N	R/C	N	Y			N
	36	R110	EA02	7SJ512	KONTROLA VYST.JEDN.	KON ZAC	22	27	32	39	75	SI	R/C	N				N	N	R/C	N	Y			N
	48	R110	EA02	7SJ512	ZEMNE SPOJENIE V L1	KON ZAC	22	27	32	39	75	SI	N	N				N	N	N					N
	49	R110	EA02	7SJ512	ZEMNE SPOJENIE V L2	KON ZAC	22	27	32	39	75	SI	N	N				N	N	N					N
	50	R110	EA02	7SJ512	ZEMNE SPOJENIE V L3	KON ZAC	22	27	32	39	75	SI	N	N				N	N	N					N
	68	R110	EA02	7SJ512	NADPR.O.GEN.VYP.IMP		22	27	32	39		TR	O	Y	O	Y	1	N	N	R	N	Y	Alarm 1 (Hupenbefehl)		N
	74	R110	EA02	7SJ512	SUM.VYP.IMP.VPRED		22	27	32	39		TR	O	Y	O	Y	1	N	N	R	N	Y	Alarm 1 (Hupenbefehl)		N
	75	R110	EA02	7SJ512	SUM.VYP.IMP.VZAD		22	27	32	39		TR	O	Y	O	Y	1	N	N	R	N	Y	Alarm 1 (Hupenbefehl)		N
	84	R110	EA02	7SJ512	NADPR.OCHR.GEN.POPUD	KON ZAC	22	27	32	39	78	SI	R/C	Y	R/C	Y	1	N	N	R/C	N	Y	Alarm 1 (Hupenbefehl)		N
	90	R110	EA02	7SJ512	NADPR.OCHR.VYP.IMP2		22	27	32	39		TR	O	N				N	N	N					N
	91	R110	EA02	7SJ512	SKRAT.OCHR.VYP.IMP.		22	27	32	39		TR	O	Y	O	Y	1	N	N	R	N	Y	Alarm 1 (Hupenbefehl)		N
60	46	R110	EA02	7SJ512	SKRAT.OCHR.POPUD L1	KON ZAC	22	27	32	39	78	SI	R/C	Y	R/C	Y	1	N	N	R/C	N	Y	Alarm 1 (Hupenbefehl)		N
60	47	R110	EA02	7SJ512	SKRAT.OCHR.POPUD L2	KON ZAC	22	27	32	39	78	SI	R/C	Y	R/C	Y	1	N	N	R/C	N	Y	Alarm 1 (Hupenbefehl)		N
60	48	R110	EA02	7SJ512	SKRAT.OCHR.POPUD L3	KON ZAC	22	27	32	39	78	SI	R/C	Y	R/C	Y	1	N	N	R/C	N	Y	Alarm 1 (Hupenbefehl)		N
60	49	R110	EA02	7SJ512	SKRAT.OCHR.CAS		22	27	32	39		TR	O	Y	O	Y	1	N	N	R	N	Y	Alarm 1 (Hupenbefehl)		N
60	50	R110	EA02	7SJ512	NADPR.OCHR.POPUD L1	KON ZAC	22	27	32	39	78	SI	R/C	Y	R/C	Y	1	N	N	R/C	N	Y	Alarm 1 (Hupenbefehl)		N
60	51	R110	EA02	7SJ512	NADPR.OCHR.POPUD L2	KON ZAC	22	27	32	39	78	SI	R/C	Y	R/C	Y	1	N	N	R/C	N	Y	Alarm 1 (Hupenbefehl)		N
60	52	R110	EA02	7SJ512	NADPR.OCHR.POPUD L3	KON ZAC	22	27	32	39	78	SI	R/C	Y	R/C	Y	1	N	N	N			Alarm 1 (Hupenbefehl)		N
60	53	R110	EA02	7SJ512	NADPR.OCHR.CAS		22	27	32	39		TR	O	Y	O	Y	1	N	N	R	N	Y	Alarm 1 (Hupenbefehl)		N
63	21	R110	EA02	7SJ512	NADPR.SMER.POPUD L1	KON ZAC	22	27	32	39	78	SI	R/C	Y	R/C	Y	1	N	N	R/C	N	Y	Alarm 1 (Hupenbefehl)		N
63	22	R110	EA02	7SJ512	NADPR.SMER.POPUD L2	KON ZAC	22	27	32	39	78	SI	R/C	Y	R/C	Y	1	N	N	R/C	N	Y	Alarm 1 (Hupenbefehl)		N
63	23	R110	EA02	7SJ512	NADPR.SMER.POPUD L3	KON ZAC	22	27	32	39	78	SI	R/C	Y	R/C	Y	1	N	N	R/C	N	Y	Alarm 1 (Hupenbefehl)		N
63	24	R110	EA02	7SJ512	NADPR.SMER.OCHR.CAS		22	27	32	39		TR	O	Y	O	Y	1	N	N	R	N	Y	Alarm 1 (Hupenbefehl)		N
135	81	R110	EA02	7SJ512	OCHRANA PRIPRAVENA	KON ZAC	22	27	32	39	75	SI	R/C	N				N	N	R/C	N	Y			N
135	130	R110	EA02	7SJ512	BUFER SIGN. PREPLNENY		22	27	32	39	0	TR	O	N				N	N	R	N	Y			N

Proprietary data, company confidential. All rights reserved.
Confiée à titre de secret d'entreprise. Tous droits réservés.
Comunicado como segredo empresarial. Reservados todos os direitos.
Confiado como secreto industrial. Nos reservamos todos los derechos.
The reproduction, transmission or use of this document or its contents is not permitted without express written authority. Offenders will be liable for damages. All rights, including rights created by patent grant or registration of a utility model or design, are reserved.

Documentation structure: Standard
Source file: KO050722.ODA

			Date	22.07.2005	VSZ KOSICE
			Drawn	LANG	
			Appr.		
Rev.	Remarks	Date	Name	Norm	Orig./Repl. 1/Repl. by

SIEMENS AG
ISATOOLS

Substation control system 6MB
Numerical protection device:
Indications
Table

T = /BE 21
+
-S104
Page 21

Station:
Device EA02 7SJ512
Device type: 7SJ512
Function type: 7SJ512
Manufact.: SIEMENS

Packet number: 3
Version number: 0

Connection Device: EA02 EAG
Subrack: EA02 7SJ512
Module:
Comm. processor:
Channel connection
UART: 2
MUX:

Function type	Info number	Command output
	19	N
	22	N
	27	N
	28	N
	29	N
	30	N
	32	N
	33	N
	36	N
	48	N
	49	N
	50	N
	68	N
	74	N
	75	N
	84	N
	90	N
	91	N
60	46	N
60	47	N
60	48	N
60	49	N
60	50	N
60	51	N
60	52	N
60	53	N
63	21	N
63	22	N
63	23	N
63	24	N
135	81	N
135	130	N

Proprietary data, company confidential. All rights reserved.
Confie a titre de secret d'entreprise. Tous droits r,serv,s.
Comunicado como segredo empresarial. Reservados todos os direitos.
Confiado como secreto industrial. Nos reservamos todos los derechos.
The reproduction, transmission or use of theis document or its is not permitted without expres written authority.
Offenders will be liable for damages. All rights, including rights created by patent grant or registration of a utility model or design, are reserved.

Documentation structur: Standard
Source file: KO050722.ODA

Rc	Remarks	Date	Name	Date	22.07.2005	VSZ KOSICE	SIEMENS AG ISA TOOLS	Substation control system 6MB
				Drawn	LANG			Numerical protection device:
				Appr.				Indications
				Norm		Orig./Repl. 1/Repl. by		Table

T = /BE 22
+
-S104
Page

Proprietary data, company confidential. All rights reserved.
Copia a terceros, uso o divulgación de su contenido sin autorización escrita, están prohibidos. Todos los derechos
Comunicado como secreto de empresa. Reservados todos los derechos.
Confiado como secreto industrial. Nos reservamos todos los derechos.

Station:

Device EA02 7SJ512
Device type: 7SJ512
Function type: 7SJ512
Manufact.: SIEMENS

Packet number: 3
Version number: 0

Connection Device: EA02 EAG
Subrack: EA02 7SJ512
Module:
Comm. processor:
Channel connection
UART: 2
MUX:

Function type	Info number	Section	Bay	Logical device	Lower limit	Value text	Column section	Column bay	Column logical device	Column information	Column value text	Indication type	Entry in event list	Entry in alarm list	Acknowledge	Display in indication area	Indication class	Entry in SML	Display in diagram	Archive	Operational indications	Protection indications	Command derivation	Indication derivation	Tel ctrl FP/SC
135	131	R110	EA02	7SJ512	STRATA SIGN. PRE LSA		22	27	32	39	0	TR	O	N				N	N	R	N	Y			N
135	170	R110	EA02	7SJ512	PORUCHA V/V JEDNOTKY	KON ZAC	22	27	32	39	75	SI	R/C	N				N	N	R/C	N	Y			N
135	231	R110	EA02	7SJ512	PORUCHA NAPAJ.OCHR.	KON ZAC	22	27	32	39	78	SI	R/C	Y	R/C	Y	1	N	N	R/C	N	Y	Alarm 1 (Hupenbefehl)		N
150	151	R110	EA02	7SJ512	SUM.POSOBENIE OCHR.		22	27	32	39	0	TR	O	Y	O	Y	1	N	N	R	N	Y	Alarm 1 (Hupenbefehl)		N
150	152	R110	EA02	7SJ512	SUM.ZRUS.POSOB.OCHR.		22	27	32	39	0	TR	O	Y	O	Y	1	N	N	R	N	Y	Alarm 1 (Hupenbefehl)		N
150	161	R110	EA02	7SJ512	SUM.GEN.VYP.IMPULZ		22	27	32	39	0	TR	O	Y	O	Y	1	N	N	R	N	Y	Alarm 1 (Hupenbefehl)		N
150	171	R110	EA02	7SJ512	VYPIN.PRUD. L1 I/In=		22	27	32	39	0	NV	O	Y	O	Y	1	N	N	R	N	Y	Alarm 1 (Hupenbefehl)		N
150	172	R110	EA02	7SJ512	VYPIN.PRUD. L2 I/In=		22	27	32	39	0	NV	O	Y	O	Y	1	N	N	R	N	Y	Alarm 1 (Hupenbefehl)		N
150	173	R110	EA02	7SJ512	VYPIN.PRUD. L3 I/In=		22	27	32	39	0	NV	O	Y	O	Y	1	N	N	R	N	Y	Alarm 1 (Hupenbefehl)		N
167	11	R110	EA02	7SJ512	O.PRETAZ. VYPNUTA	KON ZAC	22	27	32	39	75	SI	R/C	N				N	N	R/C	N	Y			N
167	12	R110	EA02	7SJ512	O.PRETAZ. BLOKOV.	KON ZAC	22	27	32	39	75	SI	R/C	N				N	N	R/C	N	Y			N
167	13	R110	EA02	7SJ512	O.PRETAZ. V CINNOSTI	KON ZAC	22	27	32	39	75	SI	R/C	N				N	N	R/C	N	Y			N
167	15	R110	EA02	7SJ512	O.PRETAZ. PRUD.VYSTR	KON ZAC	22	27	32	39	75	SI	R/C	N				N	N	R/C	N	Y			N
167	16	R110	EA02	7SJ512	O.PRETAZ. TEPEL.VYSTR	KON ZAC	22	27	32	39	75	SI	R/C	N				N	N	R/C	N	Y			N
167	21	R110	EA02	7SJ512	O.PRETAZ. VYP.POVEL		22	27	32	39		TR	O	N				N	N	R	N	Y			N

The reproduction, transmission or use of this document or its
is not permitted without express written authority.
Offenders will be liable for damages. All rights, including rights
created by patent grant or registration of a utility model or design.

Documentation structur: Standard
Source file: K0050722.ODA

			Date	22.07.2005	VSZ KOSICE
			Drawn	LANG	
			Appr.		
Rev.	Remarks	Date	Name	Norm	Orig./Repl. 1/Repl. by

SIEMENS AG
ISAOOLS

Substation control system 6MB
Numerical protection device:
Indications
Table

T = /BE 23
+
-S104
Page 23

Station:

Device EA02 7SJ512
Device type: 7SJ512
Function type: 7SJ512
Manufact.: SIEMENS

Packet number: 3
Version number: 0

Connection Device: EA02 EAG
Subrack: EA02 7SJ512
Module:
Comm. processor:
Channel connection
UART: 2
MUX:

Function type	Info number	Command output
135	131	N
135	170	N
135	231	N
150	151	N
150	152	N
150	161	N
150	171	N
150	172	N
150	173	N
167	11	N
167	12	N
167	13	N
167	15	N
167	16	N
167	21	N

Proprietary data, company confidential. All rights reserved.
Confie a titre de secret d'entreprise. Tous droits reservs.
Comunicado como segredo empresarial. Reservados todos os direitos.
Confiado como secreto industrial. Nos reservamos todos los derechos.

The reproduction, transmission or use of this document or its is not permitted without express written authority.
Offenders will be liable for damages. All rights, including rights created by patent grant or registration of a utility model or design, are reserved

Documentation structur: Standard
Source file: KO050722.ODA

Rev	Remarks	Date	Name	Date	22.07.2005	VSZ KOSICE	SIEMENS AG ISAOOLS	Substation control system 6MB
				Drawn	LANG			Numerical protection device:
				Appr.				Indications
				Norm		Orig./Repl. 1/Repl. by		Table

T = /BE 24
+
-S104
Page

Proprietary data, company confidential. All rights reserved
Confi a ltrie de secret dentreprise. Tous droits reserves.
Comunicado como segredo empresarial. Reservados todos os direitos.
Confiado como secreto industrial. Nos reservamos todos los derechos
The reproduction, transmission or use of this document or its
is not permitted without expres written authority.
Offenders will be liable for damages. All rights, including rights
created by patent grant or registration of a utility model or design, are reserved

Station:

Device EA03 7SJ512
Device type: 7SJ512
Function type: 7SJ512
Manufact.: SIEMENS

Packet number: 3
Version number: 0

Connection Device: EA03 EAG
Subrack: EA03 7SJ512
Module:
Comm. processor:
Channel connection
UART: 2
MUX:

Function type	Info number	Section	Bay	Logical device	Lower limit	Value text	Column section	Column bay	Column logical device	Column information	Column value text	Indication type	Entry in event list	Entry in alarm list	Acknowledge	Display in indication area	Indication class	Entry in SML	Display in diagram	Archive	Operational indications	Protection indications
	19	R110	EA03	7SJ512	NASTAVENIE LED ZOBR.		22	27	32	39	0	TR	O	N				N	N	R	N	Y
	22	R110	EA03	7SJ512	PARAMETRIZACIA OCHRANY	KON ZAC	22	27	32	39	75	SI	R/C	N				N	N	R/C	N	Y
	27	R110	EA03	7SJ512	ANWENDERDEF. MELDUNG 1	KON ZAC	22	27	32	39	75	SI	N	N				N	N	N		
	28	R110	EA03	7SJ512	ANWENDERDEF. MELDUNG 2	KON ZAC	22	27	32	39	75	SI	N	N				N	N	N		
	29	R110	EA03	7SJ512	ANWENDERDEF. MELDUNG 3	KON ZAC	22	27	32	39	75	SI	N	N				N	N	N		
	30	R110	EA03	7SJ512	ANWENDERDEF. MELDUNG 4	KON ZAC	22	27	32	39	75	SI	N	N				N	N	N		
	32	R110	EA03	7SJ512	PORUCHA MER. PRUDU	KON ZAC	22	27	32	39	75	SI	R/C	N				N	N	R/C	N	Y
	33	R110	EA03	7SJ512	PORUCHA MER.NAPATIA	KON ZAC	22	27	32	39	75	SI	R/C	N				N	N	R/C	N	Y
	36	R110	EA03	7SJ512	KONTROLA VYST.JEDN.	KON ZAC	22	27	32	39	75	SI	R/C	N				N	N	R/C	N	Y
	48	R110	EA03	7SJ512	ZEMNE SPOJENIE V L1	KON ZAC	22	27	32	39	75	SI	N	N				N	N	N		
	49	R110	EA03	7SJ512	ZEMNE SPOJENIE V L2	KON ZAC	22	27	32	39	75	SI	N	N				N	N	N		
	50	R110	EA03	7SJ512	ZEMNE SPOJENIE V L3	KON ZAC	22	27	32	39	75	SI	N	N				N	N	N		
	68	R110	EA03	7SJ512	NADPR.O.GEN.VYP.IMP		22	27	32	39		TR	O	Y	O	Y	1	N	N	R	N	Y
	74	R110	EA03	7SJ512	SUM.VYP.IMP.VPRED		22	27	32	39		TR	O	Y	O	Y	1	N	N	R	N	Y
	75	R110	EA03	7SJ512	SUM.VYP.IMP.VZAD		22	27	32	39		TR	O	Y	O	Y	1	N	N	R	N	Y
	84	R110	EA03	7SJ512	NADPR.OCHR.GEN.POPUD	KON ZAC	22	27	32	39	78	SI	R/C	Y	R/C	Y	1	N	N	R/C	N	Y
	90	R110	EA03	7SJ512	NADPR.OCHR.VYP.IMP2		22	27	32	39		TR	O	N				N	N	N		
	91	R110	EA03	7SJ512	SKRAT.OCHR.VYP.IMP.		22	27	32	39		TR	O	Y	O	Y	1	N	N	R	N	Y
60	46	R110	EA03	7SJ512	SKRAT.OCHR.POPUD L1	KON ZAC	22	27	32	39	78	SI	R/C	Y	R/C	Y	1	N	N	R/C	N	Y
60	47	R110	EA03	7SJ512	SKRAT.OCHR.POPUD L2	KON ZAC	22	27	32	39	78	SI	R/C	Y	R/C	Y	1	N	N	R/C	N	Y
60	48	R110	EA03	7SJ512	SKRAT.OCHR.POPUD L3	KON ZAC	22	27	32	39	78	SI	R/C	Y	R/C	Y	1	N	N	R/C	N	Y
60	49	R110	EA03	7SJ512	SKRAT.OCHR.CAS		22	27	32	39		TR	O	Y	O	Y	1	N	N	R	N	Y
60	50	R110	EA03	7SJ512	NADPR.OCHR.POPUD L1	KON ZAC	22	27	32	39	78	SI	R/C	Y	R/C	Y	1	N	N	R/C	N	Y
60	51	R110	EA03	7SJ512	NADPR.OCHR.POPUD L2	KON ZAC	22	27	32	39	78	SI	R/C	Y	R/C	Y	1	N	N	R/C	N	Y
60	52	R110	EA03	7SJ512	NADPR.OCHR.POPUD L3	KON ZAC	22	27	32	39	78	SI	R/C	Y	R/C	Y	1	N	N	N		
60	53	R110	EA03	7SJ512	NADPR.OCHR.CAS		22	27	32	39		TR	O	Y	O	Y	1	N	N	R	N	Y
63	21	R110	EA03	7SJ512	NADPR.SMER.POPUD L1	KON ZAC	22	27	32	39	78	SI	R/C	Y	R/C	Y	1	N	N	R/C	N	Y
63	22	R110	EA03	7SJ512	NADPR.SMER.POPUD L2	KON ZAC	22	27	32	39	78	SI	R/C	Y	R/C	Y	1	N	N	R/C	N	Y
63	23	R110	EA03	7SJ512	NADPR.SMER.POPUD L3	KON ZAC	22	27	32	39	78	SI	R/C	Y	R/C	Y	1	N	N	R/C	N	Y
63	24	R110	EA03	7SJ512	NADPR.SMER.OCHR.CAS		22	27	32	39		TR	O	Y	O	Y	1	N	N	R	N	Y
135	81	R110	EA03	7SJ512	OCHRANA PRIPRAVENA	KON ZAC	22	27	32	39	75	SI	R/C	N				N	N	R/C	N	Y
135	130	R110	EA03	7SJ512	BUFER SIGN. PREPLNENY		22	27	32	39	0	TR	O	N				N	N	R	N	Y

Documentation structur: Standard
Source file: KO050722.ODA

Date	22.07.2005	VSZ KOSICE	SIEMENS AG ISAOOLS
Drawn	LANG		
Appr.			
Rev.	Remarks	Date	Name Norm

Orig./Repl. 1/Repl. by

Substation control system 6MB
Numerical protection device:
Indications
Table

T = /BE 25
+
-S104
Page 25

Station:
Device EA03 7SJ512
Device type: 7SJ512
Function type: 7SJ512
Manufact.: SIEMENS

Packet number: 3
Version number: 0

Connection Device: EA03 EAG
Subrack: EA03 7SJ512
Module:
Comm. processor:
Channel connection
UART: 2
MUX:

Function type	Info number	Command derivation	Indication derivation	Tel ctrl FP/SC	Command output
	19			N	N
	22			N	N
	27		7SJ512 ROZPOJINIE OCHRANAMIE	N	N
	28			N	N
	29			N	N
	30			N	N
	32			N	N
	33			N	N
	36			N	N
	48			N	N
	49			N	N
	50			N	N
	68	Alarm 1 (Hupenbefehl)		N	N
	74	Alarm 1 (Hupenbefehl)		N	N
	75	Alarm 1 (Hupenbefehl)		N	N
	84	Alarm 1 (Hupenbefehl)		N	N
	90			N	N
	91	Alarm 1 (Hupenbefehl)		N	N
60	46	Alarm 1 (Hupenbefehl)		N	N
60	47	Alarm 1 (Hupenbefehl)		N	N
60	48	Alarm 1 (Hupenbefehl)		N	N
60	49	Alarm 1 (Hupenbefehl)		N	N
60	50	Alarm 1 (Hupenbefehl)		N	N
60	51	Alarm 1 (Hupenbefehl)		N	N
60	52	Alarm 1 (Hupenbefehl)		N	N
60	53	Alarm 1 (Hupenbefehl)		N	N
63	21	Alarm 1 (Hupenbefehl)		N	N
63	22	Alarm 1 (Hupenbefehl)		N	N
63	23	Alarm 1 (Hupenbefehl)		N	N
63	24	Alarm 1 (Hupenbefehl)		N	N
135	81			N	N
135	130			N	N

Proprietary data, company confidential. All rights reserved.
Confie a titre de secret d'entreprise. Tous droits reservés.
Comunicado como segredo empresarial. Reservados todos os direitos.
Confiado como secreto industrial. Nos reservamos todos los derechos.
The reproduction, transmission or use of this document or its is not permitted without express written authority.
Offenders will be liable for damages. All rights, including rights created by patent grant or registration of a utility model or design, are reserved.

Documentation structur: Standard
Source file: KO050722.ODA

Re	Remarks	Date	Name	Date	22.07.2005	VSZ KOSICE	SIEMENS AG ISAOOLS	Substation control system 6MB
				Drawn	LANG			Numerical protection device:
				Appr.				Indications
				Norm		Orig./Repl. 1/Repl. by		Table

T = /BE 26
+
-S104
Page

Proprietary data, company confidential. All rights reserved.
Confie a ltre de secret dentreprise. Tous droits reservs.
Comunicado como segredo empresarial. Reservados todos os direitos.
Confiado como secreto industrial. Nos reservamos todos los derechos.
The reproduction, transmission or use of this document or its
is not permitted without express written authority.
Offenders will be liable for damages. All rights, including rights
created by patent grant or registration of a utility model or design, are reserved.

Station:
Device EA03 7SJ512
Device type: 7SJ512
Function type: 7SJ512
Manufact.: SIEMENS

Packet number: 3
Version number: 0

Connection Device: EA03 EAG
Subrack: EA03 7SJ512
Module:
Comm. processor:
Channel connection
UART: 2
MUX:

Function type	Info number	Section	Bay	Logical device	Lower limit	Value text	Column section	Column bay	Column logical device	Column information	Column value text	Indication type	Entry in event list	Entry in alarm list	Acknowledge	Display in indication area	Indication class	Entry in SML	Display in diagram	Archive	Operational indications	Protection indications
135	131	R110	EA03	7SJ512	STRATA SIGN. PRE LSA		22	27	32	39	0	TR	O	N				N	N	R	N	Y
135	170	R110	EA03	7SJ512	PORUCHA V/V JEDNOTKY	KON ZAC	22	27	32	39	75	SI	R/C	N				N	N	R/C	N	Y
135	231	R110	EA03	7SJ512	PORUCHA NAPAJ.OCHR.	KON ZAC	22	27	32	39	78	SI	R/C	Y	R/C	Y	1	N	N	R/C	N	Y
150	151	R110	EA03	7SJ512	SUM.POSOBENIE OCHR.		22	27	32	39	0	TR	O	Y	O	Y	1	N	N	R	N	Y
150	152	R110	EA03	7SJ512	SUM.ZRUS.POSOB.OCHR.		22	27	32	39	0	TR	O	Y	O	Y	1	N	N	R	N	Y
150	161	R110	EA03	7SJ512	SUM.GEN.VYP.IMPULZ		22	27	32	39	0	TR	O	Y	O	Y	1	N	N	R	N	Y
150	171	R110	EA03	7SJ512	VYPIN.PRUD. L1 I/In=		22	27	32	39	0	NV	O	Y	O	Y	1	N	N	R	N	Y
150	172	R110	EA03	7SJ512	VYPIN.PRUD. L2 I/In=		22	27	32	39	0	NV	O	Y	O	Y	1	N	N	R	N	Y
150	173	R110	EA03	7SJ512	VYPIN.PRUD. L3 I/In=		22	27	32	39	0	NV	O	Y	O	Y	1	N	N	R	N	Y
167	11	R110	EA03	7SJ512	O.PRETAZ. VYPNUTA	KON ZAC	22	27	32	39	75	SI	R/C	N				N	N	R/C	N	Y
167	12	R110	EA03	7SJ512	O.PRETAZ. BLOKOV.	KON ZAC	22	27	32	39	75	SI	R/C	N				N	N	R/C	N	Y
167	13	R110	EA03	7SJ512	O.PRETAZ. V CINNOSTI	KON ZAC	22	27	32	39	75	SI	R/C	N				N	N	R/C	N	Y
167	15	R110	EA03	7SJ512	O.PRETAZ. PRUD.VYSTR	KON ZAC	22	27	32	39	75	SI	R/C	N				N	N	R/C	N	Y
167	16	R110	EA03	7SJ512	O.PRETAZ. TEPEL.VYSTR	KON ZAC	22	27	32	39	75	SI	R/C	N				N	N	R/C	N	Y
167	21	R110	EA03	7SJ512	O.PRETAZ. VYP.POVEL		22	27	32	39		TR	O	N				N	N	R	N	Y

Documentation structur: Standard
Source file: KO050722.ODA

Rev.	Remarks	Date	Name	Norm		Orig./Repl. 1/Repl. by
				Date	22.07.2005	VSZ KOSICE
				Drawn	LANG	
				Appr.		

SIEMENS AG
ISATOOLS

Substation control system 6MB
Numerical protection device:
Indications
Table

T = /BE 27
+
-S104
Page 27

Station:

Device EA03 7SJ512
Device type: 7SJ512
Function type: 7SJ512
Manufact.: SIEMENS

Packet number: 3
Version number: 0

Connection Device: EA03 EAG
Subrack: EA03 7SJ512
Module:
Comm. processor:
Channel connection
UART: 2
MUX:

Function type	Info number	Command derivation	Indication derivation	Tel ctrl FP/SC	Command output
135	131			N	N
135	170			N	N
135	231	Alarm 1 (Hupenbefehl)		N	N
150	151	Alarm 1 (Hupenbefehl)		N	N
150	152	Alarm 1 (Hupenbefehl)		N	N
150	161	Alarm 1 (Hupenbefehl)		N	N
150	171	Alarm 1 (Hupenbefehl)		N	N
150	172	Alarm 1 (Hupenbefehl)		N	N
150	173	Alarm 1 (Hupenbefehl)		N	N
167	11			N	N
167	12			N	N
167	13			N	N
167	15			N	N
167	16			N	N
167	21			N	N

Proprietary data, company confidential. All rights reserved.
Confie a titre de secret d'entreprise. Tous droits reservés.
Comunicado como segredo empresarial. Reservados todos os direitos.
Confiado como secreto industrial. Nos reservamos todos los derechos.

The reproduction, transmission or use of this document or its is not permitted without expres written authority. Offenders will be liable for damages. All rights, including rights created by patent grant or registration of a utility model or design, are reserved.

Documentation structur: Standard
Source file: KO050722.ODA

Rev	Remarks	Date	Name	Date	22.07.2005	VSZ KOSICE	SIEMENS AG ISA TOOLS	Substation control system 6MB	T = /BE 28
				Drawn	LANG			Numerical protection device:	+
				Appr.				Indications	
				Norm		Orig./Repl. 1/Repl. by		Table	-S104 Page

Proprietary data, company confidential. All rights reserved
Confie a titre de secret d'entreprise. Tous droits réservés
Comunicado como segredo empresarial. Reservados todos os direitos
Confiado como secreto industrial. Nos reservamos todos los derechos
The reproduction, transmission or use of this document or its
is not permitted without expres written authority.
Offenders will be liable for damages. All rights, including rights
created by patent grant or registration of a utility model or design, are reserved

Station:
Device EA04 7SD502
Device type: 7SD502/503
Function type: 7SD502/503
Manufact.: SIEMENS

Packet number: 3
Version number: 0

Connection Device: EA04 EAG
Subrack: EA04 7SD502
Module:
Comm. processor:
Channel connection
UART: 2
MUX:

Function type	Info number	Section	Bay	Logical device	Lower limit	Value text	Column section	Column bay	Column logical device	Column information	Column value text	Indication type	Entry in event list	Entry in alarm list	Acknowledge	Display in indication area	Indication class	Entry in SML	Display in diagram	Archive	Operational indications	Protection indications	Command derivation	Tel ctrl FP/SC	Command output
	19	R110	EA04	7SD502	NASTAVENIE LED ZOBR.		22	27	32	39	0	TR	O	N				N	N	R	N	Y		N	N
	22	R110	EA04	7SD502	PARAMETRIZACIA OCHRANY	KON ZAC	22	27	32	39	75	SI	R/C	N				N	N	R/C	N	Y		N	N
	23	R110	EA04	7SD502	PARAMETRIZ.AKT.SADA A	KON ZAC	22	27	32	39	75	SI	R/C	N				N	N	R/C	N	Y		N	N
	24	R110	EA04	7SD502	PARAMETRIZ.AKT.SADA B	KON ZAC	22	27	32	39	75	SI	R/C	N				N	N	R/C	N	Y		N	N
	25	R110	EA04	7SD502	PARAMETRIZ.AKT.SADA C	KON ZAC	22	27	32	39	75	SI	R/C	N				N	N	R/C	N	Y		N	N
	26	R110	EA04	7SD502	PARAMETRIZ.AKT.SADA D	KON ZAC	22	27	32	39	75	SI	R/C	N				N	N	R/C	N	Y		N	N
	27	R110	EA04	7SD502	POSOBENIE PLAST.OCHR	KON ZAC	22	27	32	39	75	SI	N	N				N	N	N				N	N
	68	R110	EA04	7SD502	DIF.O: VYP ST.IDIFF>		22	27	32	39		TR	O	Y	O	Y	1	N	N	R	N	Y	Alarm 1 (Hupenbefehl)	N	N
	84	R110	EA04	7SD502	DIF.O:GEN.POPUD	KON ZAC	22	27	32	39	78	SI	R/C	Y	R/C	Y	1	N	N	R/C	N	Y	Alarm 1 (Hupenbefehl)	N	N
51	111	R110	EA04	7SD502	VAZBA JE VYPNUTA	KON ZAC	22	27	32	39	75	SI	R/C	N				N	N	R/C	N	Y		N	N
51	113	R110	EA04	7SD502	VAZBA V CINNOSTI	KON ZAC	22	27	32	39	75	SI	R/C	N				N	N	R/C	N	Y		N	N
51	117	R110	EA04	7SD502	VAZBA VYP. IMPULZ	KON ZAC	22	27	32	39	78	SI	R/C	N				N	N	R/C	N	Y		N	N
62	6	R110	EA04	7SD502	REZ.BLOK.STUP.I>>	KON ZAC	22	27	32	39	75	SI	R/C	N				N	N	R/C	N	Y		N	N
62	7	R110	EA04	7SD502	REZ.BLOK.STUP.I>/Ip	KON ZAC	22	27	32	39	75	SI	R/C	N				N	N	R/C	N	Y		N	N
62	103	R110	EA04	7SD502	REZ. V. CINNOSTI	KON ZAC	22	27	32	39	75	SI	R/C	N				N	N	R/C	N	Y		N	N
62	111	R110	EA04	7SD502	REZ.GEN.POPUD		22	27	32	39		TR	O	Y	O	Y	1	N	N	R	N	Y	Alarm 1 (Hupenbefehl)	N	N
62	121	R110	EA04	7SD502	REZ.POPUD I>>		22	27	32	39		TR	O	Y	O	Y	1	N	N	R	N	Y	Alarm 1 (Hupenbefehl)	N	N
62	122	R110	EA04	7SD502	REZ.POPUD I>/Ip		22	27	32	39		TR	O	Y	O	Y	1	N	N	R	N	Y	Alarm 1 (Hupenbefehl)	N	N
62	141	R110	EA04	7SD502	REZ.SKRAT.CAS		22	27	32	39		TR	O	Y	O	Y	1	N	N	R	N	Y	Alarm 1 (Hupenbefehl)	N	N
62	142	R110	EA04	7SD502	REZ.NADPR.CAS		22	27	32	39		TR	O	Y	O	Y	1	N	N	R	N	Y	Alarm 1 (Hupenbefehl)	N	N
62	151	R110	EA04	7SD502	REZ.GEN.VYP.IMPULZ		22	27	32	39		TR	O	Y	O	Y	1	N	N	R	N	Y	Alarm 1 (Hupenbefehl)	N	N
92	17	R110	EA04	7SD502	DIF.O:V CINNOSTI	KON ZAC	22	27	32	39	75	SI	R/C	N				N	N	R/C	N	Y		N	N
93	11	R110	EA04	7SD502	DIAL.VYPINANIE VYPNUTE	KON ZAC	22	27	32	39	75	SI	R/C	N				N	N	R/C	N	Y		N	N
93	16	R110	EA04	7SD502	DIAL.VYP.IMP.VYSLANY	KON ZAC	22	27	32	39	75	SI	R/C	N				N	N	R/C	N	Y		N	N
93	41	R110	EA04	7SD502	VYP.PROTIST:VYPNUTE	KON ZAC	22	27	32	39	75	SI	R/C	N				N	N	R/C	N	Y		N	N
93	43	R110	EA04	7SD502	VYP.PROTIST.V.CINNOSTI	KON ZAC	22	27	32	39	75	SI	R/C	N				N	N	R/C	N	Y		N	N
93	46	R110	EA04	7SD502	VYP.PROTIS:POPUD	KON ZAC	22	27	32	39	78	SI	R/C	Y	R/C	Y	1	N	N	R/C	N	Y	Alarm 1 (Hupenbefehl)	N	N
93	47	R110	EA04	7SD502	VYP.PROTIS:VYP.IMP	KON ZAC	22	27	32	39	78	SI	R/C	Y	R/C	Y	1	N	N	R/C	N	Y	Alarm 1 (Hupenbefehl)	N	N
93	71	R110	EA04	7SD502	KONTR.PREN.CES.VYPNUTA	KON ZAC	22	27	32	39	75	SI	R/C	N				N	N	R/C	N	Y		N	N
93	76	R110	EA04	7SD502	POR.POM.PRENOS.CESTY	KON ZAC	22	27	32	39	75	SI	R/C	N				N	N	R/C	N	Y		N	N
135	81	R110	EA04	7SD502	OCHRANA PRIPRAVENA	KON ZAC	22	27	32	39	75	SI	R/C	N				N	N	R/C	N	Y		N	N
135	130	R110	EA04	7SD502	BUFER SIGN. PREPLNENY		22	27	32	39	0	TR	O	N				N	N	R	N	Y		N	N

Documentation structure: Standard
Source file: KO050722.ODA

Rev.	Remarks	Date	Name	Norm	Date 22.07.2005	Drawn LANG	Appr.	Orig./Repl. 1/Repl. by

VSZ KOSICE

SIEMENS AG
ISATOOLS

Substation control system 6MB
Numerical protection device:
Indications
Table

T = /BE 29
+
-S104
Page 29

Proprietary data, company confidential. All rights reserved
Confia a ltrna da asset dlrtenrise. Tu a drjcts sserv s.
Comunicado como segredo empresarial. Reservados todos os direitos.
Confiado como secreto industrial. Nos reservamos todos los derechos
The reproduction, transmission or use of this document or its
is not permitted without express written authority. including rights
Offenders will be liable for damages. All rights, including rights
created by patent grant or registration of a utility model or design, are reserved

Station:

Device EA04 7SD502
Device type: 7SD502/503
Function type: 7SD502/503
Manufact.: SIEMENS

Packet number: 3
Version number: 0

Connection Device: EA04 EAG
Subrack: EA04 7SD502
Module:
Comm. processor:
Channel connection
UART: 2
MUX:

Function type	Info number	Section	Bay	Logical device	Lower limit	Value text	Column section	Column bay	Column logical device	Column information	Column value text	Indication type	Entry in event list	Entry in alarm list	Acknowledge	Display in indication area	Indication class	Entry in SML	Display in diagram	Archive	Operational indications	Protection indications	Command derivation	Tel ctrl FP/SC	Command output
135	131	R110	EA04	7SD502	STRATA SIGN. PRE LSA		22	27	32	39	0	TR	O	N				N	N	R	N	Y		N	N
135	166	R110	EA04	7SD502	PORUCHA V/V JEDN.C.1	KON ZAC	22	27	32	39	75	SI	R/C	N				N	N	R/C	N	Y		N	N
135	170	R110	EA04	7SD502	PORUCHA V/V JEDNOTKY	KON ZAC	22	27	32	39	75	SI	R/C	N				N	N	R/C	N	Y		N	N
135	231	R110	EA04	7SD502	PORUCHA NAPAJ.OCHR.	KON ZAC	22	27	32	39	78	SI	R/C	Y	R/C	Y	1	N	N	R/C	N	Y	Alarm 1 (Hupenbefehl)	N	N
150	152	R110	EA04	7SD502	SUM.ZRUS.POSOB.OCHR.		22	27	32	39	0	TR	O	Y	O	Y	1	N	N	R	N	Y	Alarm 1 (Hupenbefehl)	N	N
150	161	R110	EA04	7SD502	SUM.GEN.VYP.IMPULZ		22	27	32	39	0	TR	O	Y	O	Y	1	N	N	R	N	Y	Alarm 1 (Hupenbefehl)	N	N
167	13	R110	EA04	7SD502	O.PRETAZ:V CINNOSTI	KON ZAC	22	27	32	39	75	SI	R/C	N				N	N	R/C	N	Y		N	N
167	15	R110	EA04	7SD502	O.PRETAZ:PRUD.VYSTR	KON ZAC	22	27	32	39	75	SI	R/C	N				N	N	R/C	N	Y		N	N
167	16	R110	EA04	7SD502	O.PRETAZ:TEPEL.VYSTR.	KON ZAC	22	27	32	39	75	SI	R/C	N				N	N	R/C	N	Y		N	N
167	17	R110	EA04	7SD502	O.PRETAZ:POPUD	KON ZAC	22	27	32	39	75	SI	R/C	N				N	N	R/C	N	Y		N	N
167	21	R110	EA04	7SD502	O.PRETAZ:VYP.POVEL		22	27	32	39		TR	O	Y	O	Y	1	N	N	R	N	Y	Alarm 1 (Hupenbefehl)	N	N

Documentation structur: Standard
Source file: KO050722.ODA

Date	22.07.2005	VSZ KOSICE	SIEMENS AG ISAOOLS	Substation control system 6MB
Drawn	LANG			Numerical protection device:
Appr.				Indications
Remarks	Date	Name Norm	Orig./Repl. 1/Repl. by	Table

T = /BE 30
+
-S104
Page

Proprietary data, company confidential. All rights reserved.
Confidential secret d'entreprise. Tous droits réservés.
Comunicado como secreto empresarial. Reservados todos los derechos.
Confiado como secreto industrial. Nos reservamos todos los derechos.
The reproduction, transmission or use of this document or its contents is not permitted without express written authority.
Offenders will be liable for damages. All rights, including rights created by patent grant or registration of a utility model or design, are reserved.

Station:

Device: EA04 7SJ512
Device type: 7SJ512
Function type: 7SJ512
Manufact.: SIEMENS

Packet number: 3
Version number: 0

Connection Device: EA04 EAG
Subrack: EA04 7SJ512
Module:
Comm. processor:
Channel connection
UART: 2
MUX:

Function type	Info number	Section	Bay	Logical device	Lower limit	Value text	Column section	Column bay	Column logical device	Column information	Column value text	Indication type	Entry in event list	Entry in alarm list	Acknowledge	Display in indication area	Indication class	Entry in SML	Display in diagram	Archive	Operational indications	Protection indications	Command derivation	Indication derivation	Tel ctrl FP/SC
	19	R110	EA04	7SJ512	NASTAVENIE LED ZOBR.		22	27	32	39	0	TR	O	N				N	N	R	N	Y			N
	22	R110	EA04	7SJ512	PARAMETRIZACIA OCHRANY	KON ZAC	22	27	32	39	75	SI	R/C	N				N	N	R/C	N	Y			N
	27	R110	EA04	7SJ512	ANWENDERDEF. MELDUNG 1	KON ZAC	22	27	32	39	75	SI	N	N				N	N	N					N
	28	R110	EA04	7SJ512	ANWENDERDEF. MELDUNG 2	KON ZAC	22	27	32	39	75	SI	N	N				N	N	N					N
	29	R110	EA04	7SJ512	ANWENDERDEF. MELDUNG 3	KON ZAC	22	27	32	39	75	SI	N	N				N	N	N					N
	30	R110	EA04	7SJ512	ANWENDERDEF. MELDUNG 4	KON ZAC	22	27	32	39	75	SI	N	N				N	N	N				LA6 BUCHHOLZ	N
	32	R110	EA04	7SJ512	PORUCHA MER. PRUDU	KON ZAC	22	27	32	39	75	SI	R/C	N				N	N	R/C	N	Y			N
	33	R110	EA04	7SJ512	PORUCHA MER.NAPATIA	KON ZAC	22	27	32	39	75	SI	R/C	N				N	N	R/C	N	Y			N
	36	R110	EA04	7SJ512	KONTROLA VYST.JEDN.	KON ZAC	22	27	32	39	75	SI	R/C	N				N	N	R/C	N	Y			N
	48	R110	EA04	7SJ512	ZEMNE SPOJENIE V L1	KON ZAC	22	27	32	39	75	SI	N	N				N	N	N					N
	49	R110	EA04	7SJ512	ZEMNE SPOJENIE V L2	KON ZAC	22	27	32	39	75	SI	N	N				N	N	N					N
	50	R110	EA04	7SJ512	ZEMNE SPOJENIE V L3	KON ZAC	22	27	32	39	75	SI	N	N				N	N	N					N
	68	R110	EA04	7SJ512	NADPR.O.GEN.VYP.IMP		22	27	32	39		TR	O	Y	O	Y	1	N	N	R	N	Y	Alarm 1 (Hupenbefehl)		N
	74	R110	EA04	7SJ512	SUM.VYP.IMP.VPRED		22	27	32	39		TR	O	Y	O	Y	1	N	N	R	N	Y	Alarm 1 (Hupenbefehl)		N
	75	R110	EA04	7SJ512	SUM.VYP.IMP.VZAD		22	27	32	39		TR	O	Y	O	Y	1	N	N	R	N	Y	Alarm 1 (Hupenbefehl)		N
	84	R110	EA04	7SJ512	NADPR.OCHR.GEN.POPUD	KON ZAC	22	27	32	39	78	SI	R/C	Y	R/C	Y	1	N	N	R/C	N	Y	Alarm 1 (Hupenbefehl)		N
	90	R110	EA04	7SJ512	NADPR.OCHR.VYP.IMP2		22	27	32	39		TR	O	N				N	N	N					N
	91	R110	EA04	7SJ512	SKRAT.OCHR.VYP.IMP.		22	27	32	39		TR	O	Y	O	Y	1	N	N	R	N	Y	Alarm 1 (Hupenbefehl)		N
60	46	R110	EA04	7SJ512	SKRAT.OCHR.POPUD L1	KON ZAC	22	27	32	39	78	SI	R/C	Y	R/C	Y	1	N	N	R/C	N	Y	Alarm 1 (Hupenbefehl)		N
60	47	R110	EA04	7SJ512	SKRAT.OCHR.POPUD L2	KON ZAC	22	27	32	39	78	SI	R/C	Y	R/C	Y	1	N	N	R/C	N	Y	Alarm 1 (Hupenbefehl)		N
60	48	R110	EA04	7SJ512	SKRAT.OCHR.POPUD L3	KON ZAC	22	27	32	39	78	SI	R/C	Y	R/C	Y	1	N	N	R/C	N	Y	Alarm 1 (Hupenbefehl)		N
60	49	R110	EA04	7SJ512	SKRAT.OCHR.CAS		22	27	32	39		TR	O	Y	O	Y	1	N	N	R	N	Y	Alarm 1 (Hupenbefehl)		N
60	50	R110	EA04	7SJ512	NADPR.OCHR.POPUD L1	KON ZAC	22	27	32	39	78	SI	R/C	Y	R/C	Y	1	N	N	R/C	N	Y	Alarm 1 (Hupenbefehl)		N
60	51	R110	EA04	7SJ512	NADPR.OCHR.POPUD L2	KON ZAC	22	27	32	39	78	SI	R/C	Y	R/C	Y	1	N	N	R/C	N	Y	Alarm 1 (Hupenbefehl)		N
60	52	R110	EA04	7SJ512	NADPR.OCHR.POPUD L3	KON ZAC	22	27	32	39	78	SI	R/C	Y	R/C	Y	1	N	N	N			Alarm 1 (Hupenbefehl)		N
60	53	R110	EA04	7SJ512	NADPR.OCHR.CAS		22	27	32	39		TR	O	Y	O	Y	1	N	N	R	N	Y	Alarm 1 (Hupenbefehl)		N
63	21	R110	EA04	7SJ512	NADPR.SMER.POPUD L1	KON ZAC	22	27	32	39	78	SI	R/C	Y	R/C	Y	1	N	N	R/C	N	Y	Alarm 1 (Hupenbefehl)		N
63	22	R110	EA04	7SJ512	NADPR.SMER.POPUD L2	KON ZAC	22	27	32	39	78	SI	R/C	Y	R/C	Y	1	N	N	R/C	N	Y	Alarm 1 (Hupenbefehl)		N
63	23	R110	EA04	7SJ512	NADPR.SMER.POPUD L3	KON ZAC	22	27	32	39	78	SI	R/C	Y	R/C	Y	1	N	N	R/C	N	Y	Alarm 1 (Hupenbefehl)		N
63	24	R110	EA04	7SJ512	NADPR.SMER.OCHR.CAS		22	27	32	39		TR	O	Y	O	Y	1	N	N	R	N	Y	Alarm 1 (Hupenbefehl)		N
135	81	R110	EA04	7SJ512	OCHRANA PRIPRAVENA	KON ZAC	22	27	32	39	75	SI	R/C	N				N	N	R/C	N	Y			N
135	130	R110	EA04	7SJ512	BUFER SIGN. PREPLNENY		22	27	32	39	0	TR	O	N				N	N	R	N	Y			N

Documentation structur: Standard
Source file: KO050722.ODA

Rev.	Remarks	Date	Name	Date	22.07.2005	VSZ KOSICE	SIEMENS AG ISAOOLS	Substation control system 6MB
				Drawn	LANG			Numerical protection device:
				Appr.				Indications
				Norm		Orig./Repl. 1/Repl. by		Table

T = /BE 31
+
-S104
Page 31

Proprietary data, company confidential. All rights reserved.
Confie a titre de secret d'entreprise. Tous droits réservés.
Comunicado como segredo empresarial. Reservados todos os direitos.
Confiado como secreto industrial. Nos reservamos todos los derechos.

The reproduction, transmission or use of this document or its
is not permitted without express written authority.
Offenders will be liable for damages. All rights, including rights
created by patent grant or registration of a utility model or design, are reserved.

Documentation structur: Standard
Source file: KO050722.ODA

Station:
Device EA04 7SJ512
Device type: 7SJ512
Function type: 7SJ512
Manufact.: SIEMENS

Packet number: 3
Version number: 0

Connection Device: EA04 EAG
Subrack: EA04 7SJ512
Module:
Comm. processor:
Channel connection
UART: 2
MUX:

Function type	Info number	Command output
	19	N
	22	N
	27	N
	28	N
	29	N
	30	N
	32	N
	33	N
	36	N
	48	N
	49	N
	50	N
	68	N
	74	N
	75	N
	84	N
	90	N
	91	N
60	46	N
60	47	N
60	48	N
60	49	N
60	50	N
60	51	N
60	52	N
60	53	N
63	21	N
63	22	N
63	23	N
63	24	N
135	81	N
135	130	N

Date 22.07.2005
Drawn LANG
Appr.
Norm
Remarks Date Name
VSZ
KOSICE
Orig./Repl. 1/Repl. by
SIEMENS AG
ISA TOOLS
Substation control system 6MB
Numerical protection device:
Indications
Table
T = /BE 32
+
-S104
Page

Proprietary data, company confidential. All rights reserved.
Confidential data, secret de entreprise. Tous droits réservés.
Comunicado consegado empresa. Reservados todos os direitos.
Confidencial como secreto industrial. Nos reservamos todos los derechos.
The reproduction, transmission or use of this document or its contents is not permitted without express written authority. Offenders will be liable for damages. All rights, including rights created by patent grant or registration of a utility model or design, are reserved.

Station:

Device EA04 7SJ512
Device type: 7SJ512
Function type: 7SJ512
Manufact.: SIEMENS

Packet number: 3
Version number: 0

Connection Device: EA04 EAG
Subrack: EA04 7SJ512
Module:
Comm. processor:
Channel connection
UART: 2
MUX:

Function type	Info number	Section	Bay	Logical device	Lower limit	Value text	Column section	Column bay	Column logical device	Column information	Column value text	Indication type	Entry in event list	Entry in alarm list	Acknowledge	Display in indication area	Indication class	Entry in SML	Display in diagram	Archive	Operational indications	Protection indications	Command derivation	Indication derivation	Tel ctrl FP/SC
135	131	R110	EA04	7SJ512	STRATA SIGN. PRE LSA		22	27	32	39	0	TR	O	N				N	N	R	N	Y			N
135	170	R110	EA04	7SJ512	PORUCHA V/V JEDNOTKY	KON ZAC	22	27	32	39	75	SI	R/C	N				N	N	R/C	N	Y			N
135	231	R110	EA04	7SJ512	PORUCHA NAPAJ.OCHR.	KON ZAC	22	27	32	39	78	SI	R/C	Y	R/C	Y	1	N	N	R/C	N	Y	Alarm 1 (Hupenbefehl)		N
150	151	R110	EA04	7SJ512	SUM.POSOBENIE OCHR.		22	27	32	39	0	TR	O	Y	O	Y	1	N	N	R	N	Y	Alarm 1 (Hupenbefehl)		N
150	152	R110	EA04	7SJ512	SUM.ZRUS.POSOB.OCHR.		22	27	32	39	0	TR	O	Y	O	Y	1	N	N	R	N	Y	Alarm 1 (Hupenbefehl)		N
150	161	R110	EA04	7SJ512	SUM.GEN.VYP.IMPULZ		22	27	32	39	0	TR	O	Y	O	Y	1	N	N	R	N	Y	Alarm 1 (Hupenbefehl)		N
150	171	R110	EA04	7SJ512	VYPIN.PRUD. L1 I/In=		22	27	32	39	0	NV	O	Y	O	Y	1	N	N	R	N	Y	Alarm 1 (Hupenbefehl)		N
150	172	R110	EA04	7SJ512	VYPIN.PRUD. L2 I/In=		22	27	32	39	0	NV	O	Y	O	Y	1	N	N	R	N	Y	Alarm 1 (Hupenbefehl)		N
150	173	R110	EA04	7SJ512	VYPIN.PRUD. L3 I/In=		22	27	32	39	0	NV	O	Y	O	Y	1	N	N	R	N	Y	Alarm 1 (Hupenbefehl)		N
167	11	R110	EA04	7SJ512	O.PRETAZ. VYPNUTA	KON ZAC	22	27	32	39	75	SI	R/C	N				N	N	R/C	N	Y			N
167	12	R110	EA04	7SJ512	O.PRETAZ. BLOKOV.	KON ZAC	22	27	32	39	75	SI	R/C	N				N	N	R/C	N	Y			N
167	13	R110	EA04	7SJ512	O.PRETAZ. V CINNOSTI	KON ZAC	22	27	32	39	75	SI	R/C	N				N	N	R/C	N	Y			N
167	15	R110	EA04	7SJ512	O.PRETAZ. PRUD.VYSTR	KON ZAC	22	27	32	39	75	SI	R/C	N				N	N	R/C	N	Y			N
167	16	R110	EA04	7SJ512	O.PRETAZ. TEPEL.VYSTR	KON ZAC	22	27	32	39	75	SI	R/C	N				N	N	R/C	N	Y			N
167	21	R110	EA04	7SJ512	O.PRETAZ. VYP.POVEL		22	27	32	39		TR	O	N				N	N	R	N	Y			N

Documentation structur: Standard
Source file: KO050722.ODA

Rev.	Remarks	Date	Name	Norm

Date 22.07.2005
Drawn LANG
Appr.

VSZ KOSICE

Orig./Repl. 1/Repl. by

SIEMENS AG
ISAGOOLS

Substation control system 6MB
Numerical protection device:
Indications
Table

T = /BE 33
+

-S104

Station:

Device EA04 7SJ512
Device type: 7SJ512
Function type: 7SJ512
Manufact.: SIEMENS

Packet number: 3
Version number: 0

Connection Device: EA04 EAG
Subrack: EA04 7SJ512
Module:
Comm. processor:
Channel connection
UART: 2
MUX:

Function type	Info number	Command output
135	131	N
135	170	N
135	231	N
150	151	N
150	152	N
150	161	N
150	171	N
150	172	N
150	173	N
167	11	N
167	12	N
167	13	N
167	15	N
167	16	N
167	21	N

Proprietary data, company confidential. All rights reserved.
Confie a titre de secret d'entreprise. Tous droits reservés.
Comunicado como segredo empresarial. Reservados todos os direitos.
Confiado como secreto industrial. Nos reservamos todos los derechos.

The reproduction, transmission or use of this document or its is not permitted without express written authority.
Offenders will be liable for damages. All rights, including rights created by patent grant or registration of a utility model or design, are reserved.

Documentation structur: Standard
Source file: KO050722.ODA

				Date	22.07.2005	VSZ KOSICE	SIEMENS AG ISA TOOLS
				Drawn	LANG		
				Appr.			
Rr	Remarks	Date	Name	Norm		Orig./Repl. 1/Repl. by	

Substation control system 6MB
Numerical protection device:
Indications
Table

T = /BE 34
+
-S104
Page

Proprietary data, company confidential. All rights reserved
Confia a tirhe da secret dentreprise. Tous droits rservs
Comunicado como segredo empresarial. Reservados todos os direitos.
Confiados como secreto industrial. Nos reservamos todos los derechos.

The reproduction, transmission or use of this document or its is not permitted without expres written authority.
Offenders will be liable for damages. All rights, including rights created by patent grant or registration of a utility model or design, are reserved

Station:

Device EA05 7SJ511
Device type: 7SJ511
Function type: 7SJ511
Manufact.: SIEMENS

Packet number: 3
Version number: 0

Connection Device: EA05 EAG
Subrack: EA05 7SJ511
Module:
Comm. processor:
Channel connection
UART: 2
MUX:

Function type	Info number	Section	Bay	Logical device	Lower limit	Value text	Column section	Column bay	Column logical device	Column information	Column value text	Indication type	Entry in event list	Entry in alarm list	Acknowledge	Display in indication area	Indication class	Entry in SML	Display in diagram	Archive	Operational indications	Protection indications	Command derivation	Tel ctrl FP/SC	Command output
	19	R110	EA05	7SJ511	NASTAVENIE LED ZOBR.		22	27	32	39	0	TR	O	N				N	N	R	N	Y		N	N
	22	R110	EA05	7SJ511	PARAMETRIZACIA OCHRANY	KON ZAC	22	27	32	39	75	SI	R/C	N				N	N	R/C	N	Y		N	N
	27	R110	EA05	7SJ511	ANWENDERDEF. MELDUNG 1	KON ZAC	22	27	32	39	75	SI	N	N				N	N	N				N	N
	84	R110	EA05	7SJ511	NADPR.OCHR.GEN.POPUD	KON ZAC	22	27	32	39	78	SI	R/C	Y	R/C	Y	1	N	N	R/C	N	Y	Alarm 1 (Hupenbefehl)	N	N
	90	R110	EA05	7SJ511	NADPR.OCHR.VYP.IMP		22	27	32	39		TR	O	Y	O	Y	1	N	N	R	N	Y	Alarm 1 (Hupenbefehl)	N	N
	91	R110	EA05	7SJ511	SKRAT.OCHR.VYP.IMP.		22	27	32	39		TR	O	Y	O	Y	1	N	N	R	N	Y	Alarm 1 (Hupenbefehl)	N	N
60	1	R110	EA05	7SJ511	NADPR.OCHR.BLOK.I>>	KON ZAC	22	27	32	39	75	SI	R/C	N				N	N	R/C	N	Y		N	N
60	2	R110	EA05	7SJ511	NADPR.OCHR.BLOK.I>	KON ZAC	22	27	32	39	75	SI	R/C	N				N	N	R/C	N	Y		N	N
60	46	R110	EA05	7SJ511	SKRAT.OCHR.POPUD L1	KON ZAC	22	27	32	39	78	SI	R/C	Y	R/C	Y	1	N	N	R/C	N	Y	Alarm 1 (Hupenbefehl)	N	N
60	47	R110	EA05	7SJ511	SKRAT.OCHR.POPUD L2	KON ZAC	22	27	32	39	78	SI	R/C	Y	R/C	Y	1	N	N	R/C	N	Y	Alarm 1 (Hupenbefehl)	N	N
60	48	R110	EA05	7SJ511	SKRAT.OCHR.POPUD L3	KON ZAC	22	27	32	39	78	SI	R/C	Y	R/C	Y	1	N	N	R/C	N	Y	Alarm 1 (Hupenbefehl)	N	N
60	49	R110	EA05	7SJ511	SKRAT.OCHR.CAS		22	27	32	39		TR	O	Y	O	Y	1	N	N	R	N	Y	Alarm 1 (Hupenbefehl)	N	N
60	50	R110	EA05	7SJ511	NADPR.OCHR.POPUD L1	KON ZAC	22	27	32	39	78	SI	R/C	Y	R/C	Y	1	N	N	R/C	N	Y	Alarm 1 (Hupenbefehl)	N	N
60	51	R110	EA05	7SJ511	NADPR.OCHR.POPUD L2	KON ZAC	22	27	32	39	78	SI	R/C	Y	R/C	Y	1	N	N	R/C	N	Y	Alarm 1 (Hupenbefehl)	N	N
60	52	R110	EA05	7SJ511	NADPR.OCHR.POPUD L3	KON ZAC	22	27	32	39	78	SI	R/C	Y	R/C	Y	1	N	N	R/C	N	Y	Alarm 1 (Hupenbefehl)	N	N
60	53	R110	EA05	7SJ511	NADPR.OCHR.CAS		22	27	32	39		TR	O	Y	O	Y	1	N	N	R	N	Y	Alarm 1 (Hupenbefehl)	N	N
135	81	R110	EA05	7SJ511	OCHRANA PRIPRAVENA	KON ZAC	22	27	32	39	75	SI	R/C	N				N	N	R/C	N	Y		N	N
135	130	R110	EA05	7SJ511	BUFER SIGN. PREPLNENY		22	27	32	39	0	TR	O	N				N	N	R	N	Y		N	N
135	131	R110	EA05	7SJ511	STRATA SIGN. PRE LSA		22	27	32	39	0	TR	O	N				N	N	R	N	Y		N	N
135	231	R110	EA05	7SJ511	PORUCHA NAPAJ.OCHR.	KON ZAC	22	27	32	39	78	SI	R/C	Y	R/C	Y	1	N	N	R/C	N	Y	Alarm 1 (Hupenbefehl)	N	N
150	151	R110	EA05	7SJ511	SUM.POSOBENIE OCHR.		22	27	32	39	0	TR	O	Y	O	Y	1	N	N	R	N	Y	Alarm 1 (Hupenbefehl)	N	N
150	152	R110	EA05	7SJ511	SUM.ZRUS.POSOB.OCHR.		22	27	32	39	0	TR	O	Y	O	Y	1	N	N	R	N	Y	Alarm 1 (Hupenbefehl)	N	N
150	161	R110	EA05	7SJ511	SUM.GEN.VYP.IMPULZ		22	27	32	39	0	TR	O	Y	O	Y	1	N	N	R	N	Y	Alarm 1 (Hupenbefehl)	N	N
150	171	R110	EA05	7SJ511	VYPIN.PRUD. L1 I/In=		22	27	32	39	0	NV	O	Y	O	Y	1	N	N	R	N	Y	Alarm 1 (Hupenbefehl)	N	N
150	172	R110	EA05	7SJ511	VYPIN.PRUD. L2 I/In=		22	27	32	39	0	NV	O	Y	O	Y	1	N	N	R	N	Y	Alarm 1 (Hupenbefehl)	N	N
150	173	R110	EA05	7SJ511	VYPIN.PRUD. L3 I/In=		22	27	32	39	0	NV	O	Y	O	Y	1	N	N	R	N	Y	Alarm 1 (Hupenbefehl)	N	N
167	11	R110	EA05	7SJ511	O.PRETAZ. VYPNUTA	KON ZAC	22	27	32	39	78	SI	N	N				N	N	N				N	N
167	12	R110	EA05	7SJ511	O.PRETAZ. BLOKOVANA	KON ZAC	22	27	32	39	78	SI	N	N				N	N	N				N	N
167	15	R110	EA05	7SJ511	O.PRETAZ:PRUD.VYSTR	KON ZAC	22	27	32	39	78	SI	N	N				N	N	N				N	N
167	16	R110	EA05	7SJ511	O.PRETAZ. TEPEL.VYSTR	KON ZAC	22	27	32	39	78	SI	N	N				N	N	N				N	N
167	21	R110	EA05	7SJ511	O.PRETAZ. VYP.POVEL		22	27	32	39		SI	N	N				N	N	N				N	N

Documentation structur: Standard
Source file: KO050722.ODA

Rev.	Remarks	Date	Name	Norm	Date 22.07.2005	Drawn LANG	Appr.	Orig./Repl. 1/Repl. by

VSZ KOSICE

SIEMENS AG
ISATOOLS

Substation control system 6MB
Numerical protection device:
Indications
Table

T = /BE 35
+
-S104
Page 35

Station:

Device EA06 7SJ512
Device type: 7SJ512
Function type: 7SJ512
Manufact.: SIEMENS

Packet number: 3
Version number: 0

Connection Device: EA06 EAG
Subrack: EA06 7SJ512
Module:
Comm. processor:
Channel connection
UART: 2
MUX:

Function type	Info number	Section	Bay	Logical device	Lower limit	Value text	Column section	Column bay	Column logical device	Column information	Column value text	Indication type	Entry in event list	Entry in alarm list	Acknowledge	Display in indication area	Indication class	Entry in SML	Display in diagram	Archive	Operational indications	Protection indications
	19	R110	EA06	7SJ512	NASTAVENIE LED ZOBR.		22	27	32	39	0	TR	O	N				N	N	R	N	Y
	22	R110	EA06	7SJ512	PARAMETRIZACIA OCHRANY	KON ZAC	22	27	32	39	75	SI	R/C	N				N	N	R/C	N	Y
	27	R110	EA06	7SJ512	ANWENDERDEF. MELDUNG 1	KON ZAC	22	27	32	39	75	SI	N	N				N	N	N		
	28	R110	EA06	7SJ512	ANWENDERDEF. MELDUNG 2	KON ZAC	22	27	32	39	75	SI	N	N				N	N	N		
	29	R110	EA06	7SJ512	ANWENDERDEF. MELDUNG 3	KON ZAC	22	27	32	39	75	SI	N	N				N	N	N		
	30	R110	EA06	7SJ512	ANWENDERDEF. MELDUNG 4	KON ZAC	22	27	32	39	75	SI	N	N				N	N	N		
	32	R110	EA06	7SJ512	PORUCHA MER. PRUDU	KON ZAC	22	27	32	39	75	SI	R/C	N				N	N	R/C	N	Y
	33	R110	EA06	7SJ512	PORUCHA MER.NAPATIA	KON ZAC	22	27	32	39	75	SI	R/C	N				N	N	R/C	N	Y
	36	R110	EA06	7SJ512	KONTROLA VYST.JEDN.	KON ZAC	22	27	32	39	75	SI	R/C	N				N	N	R/C	N	Y
	48	R110	EA06	7SJ512	ZEMNE SPOJENIE V L1	KON ZAC	22	27	32	39	75	SI	N	N				N	N	N		
	49	R110	EA06	7SJ512	ZEMNE SPOJENIE V L2	KON ZAC	22	27	32	39	75	SI	N	N				N	N	N		
	50	R110	EA06	7SJ512	ZEMNE SPOJENIE V L3	KON ZAC	22	27	32	39	75	SI	N	N				N	N	N		
	68	R110	EA06	7SJ512	NADPR.O.GEN.VYP.IMP		22	27	32	39		TR	O	Y	O	Y	1	N	N	R	N	Y
	74	R110	EA06	7SJ512	SUM.VYP.IMP.VPRED		22	27	32	39		TR	O	Y	O	Y	1	N	N	R	N	Y
	75	R110	EA06	7SJ512	SUM.VYP.IMP.VZAD		22	27	32	39		TR	O	Y	O	Y	1	N	N	R	N	Y
	84	R110	EA06	7SJ512	NADPR.OCHR.GEN.POPUD	KON ZAC	22	27	32	39	78	SI	R/C	Y	R/C	Y	1	N	N	R/C	N	Y
	90	R110	EA06	7SJ512	NADPR.OCHR.VYP.IMP2		22	27	32	39		TR	O	N				N	N	N		
	91	R110	EA06	7SJ512	SKRAT.OCHR.VYP.IMP.		22	27	32	39		TR	O	Y	O	Y	1	N	N	R	N	Y
60	46	R110	EA06	7SJ512	SKRAT.OCHR.POPUD L1	KON ZAC	22	27	32	39	78	SI	R/C	Y	R/C	Y	1	N	N	R/C	N	Y
60	47	R110	EA06	7SJ512	SKRAT.OCHR.POPUD L2	KON ZAC	22	27	32	39	78	SI	R/C	Y	R/C	Y	1	N	N	R/C	N	Y
60	48	R110	EA06	7SJ512	SKRAT.OCHR.POPUD L3	KON ZAC	22	27	32	39	78	SI	R/C	Y	R/C	Y	1	N	N	R/C	N	Y
60	49	R110	EA06	7SJ512	SKRAT.OCHR.CAS		22	27	32	39		TR	O	Y	O	Y	1	N	N	R	N	Y
60	50	R110	EA06	7SJ512	NADPR.OCHR.POPUD L1	KON ZAC	22	27	32	39	78	SI	R/C	Y	R/C	Y	1	N	N	R/C	N	Y
60	51	R110	EA06	7SJ512	NADPR.OCHR.POPUD L2	KON ZAC	22	27	32	39	78	SI	R/C	Y	R/C	Y	1	N	N	R/C	N	Y
60	52	R110	EA06	7SJ512	NADPR.OCHR.POPUD L3	KON ZAC	22	27	32	39	78	SI	R/C	Y	R/C	Y	1	N	N	N		
60	53	R110	EA06	7SJ512	NADPR.OCHR.CAS		22	27	32	39		TR	O	Y	O	Y	1	N	N	R	N	Y
63	21	R110	EA06	7SJ512	NADPR.SMER.POPUD L1	KON ZAC	22	27	32	39	78	SI	R/C	Y	R/C	Y	1	N	N	R/C	N	Y
63	22	R110	EA06	7SJ512	NADPR.SMER.POPUD L2	KON ZAC	22	27	32	39	78	SI	R/C	Y	R/C	Y	1	N	N	R/C	N	Y
63	23	R110	EA06	7SJ512	NADPR.SMER.POPUD L3	KON ZAC	22	27	32	39	78	SI	R/C	Y	R/C	Y	1	N	N	R/C	N	Y
63	24	R110	EA06	7SJ512	NADPR.SMER.OCHR.CAS		22	27	32	39		TR	O	Y	O	Y	1	N	N	R	N	Y
135	81	R110	EA06	7SJ512	OCHRANA PRIPRAVENA	KON ZAC	22	27	32	39	75	SI	R/C	N				N	N	R/C	N	Y
135	130	R110	EA06	7SJ512	BUFER SIGN. PREPLNENY		22	27	32	39	0	TR	O	N				N	N	R	N	Y

Proprietary data, company confidential. All rights reserved.
Confie a titre de secret d'entreprise. Tous droits réservés.
Comunicado como secreto empresarial. Reservados todos los derechos.
Confiado como secreto industrial. Nos reservamos todos os direitos.
The reproduction, transmission or use of this document or its contents is not permitted without express written authority. Offenders will be liable for damages. All rights, including rights created by patent grant or registration of a utility model or design, are reserved.

Documentation structure: Standard
Source file: KO050722.ODA

Date 22.07.2005
Drawn LANG
Appr.

VSZ KOSICE

SIEMENS AG
ISAOOLS

Substation control system 6MB
Numerical protection device:
Indications
Table

T = /BE 36
+

-S104

Page

Remarks | Date | Name Norm | Orig./Repl. 1/Repl. by

Proprietary data, company confidential. All rights reserved.
Confie a titre de secret d'entreprise. Tous droits r,serv,s.
Comunicado como segredo empresarial. Reservados todos os direitos.
Confiado como secreto industrial. Nos reservamos todos los derechos.

The reproduction, transmission or use of theis document or its is not permitted without expres written authority.
Offenders will be liable for damages. All rights, including rights created by patent grant or registration of a utility model or design, are reserved

Documentation structur: Standard
Source file: KO050722.ODA

Station:
Device EA06 7SJ512
Device type: 7SJ512
Function type: 7SJ512
Manufact.: SIEMENS

Packet number: 3
Version number: 0

Connection Device: EA06 EAG
Subrack: EA06 7SJ512
Module:
Comm. processor:
Channel connection
UART: 2
MUX:

Function type	Info number	Command derivation	Indication derivation	Tel ctrl FP/SC	Command output
	19			N	N
	22			N	N
	27			N	N
	28			N	N
	29		LA109 NADRP.OCHR.POSOBENIE	N	N
	30			N	N
	32			N	N
	33			N	N
	36			N	N
	48			N	N
	49			N	N
	50			N	N
	68	Alarm 1 (Hupenbefehl)		N	N
	74	Alarm 1 (Hupenbefehl)		N	N
	75	Alarm 1 (Hupenbefehl)		N	N
	84	Alarm 1 (Hupenbefehl)		N	N
	90			N	N
	91	Alarm 1 (Hupenbefehl)		N	N
60	46	Alarm 1 (Hupenbefehl)		N	N
60	47	Alarm 1 (Hupenbefehl)		N	N
60	48	Alarm 1 (Hupenbefehl)		N	N
60	49	Alarm 1 (Hupenbefehl)		N	N
60	50	Alarm 1 (Hupenbefehl)		N	N
60	51	Alarm 1 (Hupenbefehl)		N	N
60	52	Alarm 1 (Hupenbefehl)		N	N
60	53	Alarm 1 (Hupenbefehl)		N	N
63	21	Alarm 1 (Hupenbefehl)		N	N
63	22	Alarm 1 (Hupenbefehl)		N	N
63	23	Alarm 1 (Hupenbefehl)		N	N
63	24	Alarm 1 (Hupenbefehl)		N	N
135	81			N	N
135	130			N	N

Date 22.07.2005
Drawn LANG
Appr.
Norm
Rev. Remarks Date Name
VSZ KOSICE
Orig./Repl. 1/Repl. by
SIEMENS AG
SAPOOLS
Substation control system 6MB
Numerical protection device:
Indications
Table
T = /BE 37
+
-S104
Page 37

Proprietary data, company confidential. All rights reserved.
Confia a titre de secret d'entreprise. Tous droits reservis.
Comunicado como secreto empresarial. Reservados todos os direitos.
Confiado como secreto industrial. Nos reservamos todos los derechos.

The reproduction, transmission or use of this document or its
is not permitted without expres written authority.
Offenders will be liable for damages. All rights, including rights
created by patent grant or registration of a utility model or design, are reserved

Station:
Device EA06 7SJ512
Device type: 7SJ512
Function type: 7SJ512
Manufact.: SIEMENS

Packet number: 3
Version number: 0

Connection Device: EA06 EAG
Subrack: EA06 7SJ512
Module:
Comm. processor:
Channel connection
UART: 2
MUX:

Function type	Info number	Section	Bay	Logical device	Lower limit	Value text	Column section	Column bay	Column logical device	Column information	Column value text	Indication type	Entry in event list	Entry in alarm list	Acknowledge	Display in indication area	Indication class	Entry in SML	Display in diagram	Archive	Operational indications	Protection indications
135	131	R110	EA06	7SJ512	STRATA SIGN. PRE LSA		22	27	32	39	0	TR	O	N				N	N	R	N	Y
135	170	R110	EA06	7SJ512	PORUCHA V/V JEDNOTKY	KON ZAC	22	27	32	39	75	SI	R/C	N				N	N	R/C	N	Y
135	231	R110	EA06	7SJ512	PORUCHA NAPAJ.OCHR.	KON ZAC	22	27	32	39	78	SI	R/C	Y	R/C	Y	1	N	N	R/C	N	Y
150	151	R110	EA06	7SJ512	SUM.POSOBENIE OCHR.		22	27	32	39	0	TR	O	Y	O	Y	1	N	N	R	N	Y
150	152	R110	EA06	7SJ512	SUM.ZRUS.POSOB.OCHR.		22	27	32	39	0	TR	O	Y	O	Y	1	N	N	R	N	Y
150	161	R110	EA06	7SJ512	SUM.GEN.VYP.IMPULZ		22	27	32	39	0	TR	O	Y	O	Y	1	N	N	R	N	Y
150	171	R110	EA06	7SJ512	VYPIN.PRUD. L1 I/In=		22	27	32	39	0	NV	O	Y	O	Y	1	N	N	R	N	Y
150	172	R110	EA06	7SJ512	VYPIN.PRUD. L2 I/In=		22	27	32	39	0	NV	O	Y	O	Y	1	N	N	R	N	Y
150	173	R110	EA06	7SJ512	VYPIN.PRUD. L3 I/In=		22	27	32	39	0	NV	O	Y	O	Y	1	N	N	R	N	Y
167	11	R110	EA06	7SJ512	O.PRETAZ. VYPNUTA	KON ZAC	22	27	32	39	75	SI	R/C	N				N	N	R/C	N	Y
167	12	R110	EA06	7SJ512	O.PRETAZ. BLOKOV.	KON ZAC	22	27	32	39	75	SI	R/C	N				N	N	R/C	N	Y
167	13	R110	EA06	7SJ512	O.PRETAZ. V CINNOSTI	KON ZAC	22	27	32	39	75	SI	R/C	N				N	N	R/C	N	Y
167	15	R110	EA06	7SJ512	O.PRETAZ. PRUD.VYSTR	KON ZAC	22	27	32	39	75	SI	R/C	N				N	N	R/C	N	Y
167	16	R110	EA06	7SJ512	O.PRETAZ. TEPEL.VYSTR	KON ZAC	22	27	32	39	75	SI	R/C	N				N	N	R/C	N	Y
167	21	R110	EA06	7SJ512	O.PRETAZ. VYP.POVEL		22	27	32	39		TR	O	N				N	N	R	N	Y

Documentation structur: Standard
Source file: KO050722.ODA

Date	22.07.2005	VSZ KOSICE	SIEMENS AG ISAOOLS
Drawn	LANG		
Appr.			
Norm			

Substation control system 6MB
Numerical protection device:
Indications
Table

T = /BE 38
+
-S104
Page

Rr Remarks Date Name Orig./Repl. 1/Repl. by

Station:

Device EA06 7SJ512
Device type: 7SJ512
Function type: 7SJ512
Manufact.: SIEMENS

Packet number: 3
Version number: 0

Connection Device: EA06 EAG
Subrack: EA06 7SJ512
Module:
Comm. processor:
Channel connection
UART: 2
MUX:

Function type	Info number	Command derivation	Indication derivation	Tel ctrl FP/SC	Command output
135	131			N	N
135	170			N	N
135	231	Alarm 1 (Hupenbefehl)		N	N
150	151	Alarm 1 (Hupenbefehl)		N	N
150	152	Alarm 1 (Hupenbefehl)		N	N
150	161	Alarm 1 (Hupenbefehl)		N	N
150	171	Alarm 1 (Hupenbefehl)		N	N
150	172	Alarm 1 (Hupenbefehl)		N	N
150	173	Alarm 1 (Hupenbefehl)		N	N
167	11			N	N
167	12			N	N
167	13			N	N
167	15			N	N
167	16			N	N
167	21			N	N

Proprietary data, company confidential. All rights reserved.
Confie a titre de secret d'entreprise. Tous droits r,serv,s.
Comunicado como segredo empresarial. Reservados todos os direitos.
Confiado como secreto industrial. Nos reservamos todos los derechos.

The reproduction, transmission or use of theis document or its is not permitted without expres written authority.
Offenders will be liable for damages. All rights, including rights created by patent grant or registration of a utility model or design, are reserved

Documentation structur: Standard
Source file: KO050722.ODA

Rev.	Remarks	Date	Name	Date	22.07.2005	VSZ KOSICE	SIEMENS AG ISAOOLS	Substation control system 6MB Numerical protection device: Indications Table	T = /BE 39 + -S104	Page 39
				Drawn	LANG					
				Appr.						
				Norm		Orig./Repl. 1/Repl. by				

Proprietary data, company confidential. All rights reserved.
Confie a tire da secret dientreprise. Tous droits reservis.
Comunicado como segredo empresarial. Reservados todos os direitos.
Confiado como secreto industrial. Nos reservamos todos los derechos.
The reproduction, transmission or use of this document or its is not permitted without expres written authority.
Offenders will be liable for damages. All rights, including rights created by patent grant or registration of a utility model or design, are reserved

Station:

Device EA06 7UT512
Device type: 7UT51
Function type: 7UT51
Manufact.: SIEMENS

Packet number: 3
Version number: 0

Connection Device: EA06 EAG
Subrack: EA06 7UT512
Module:
Comm. processor:
Channel connection
UART: 2
MUX:

Function type	Info number	Section	Bay	Logical device	Lower limit	Value text	Column section	Column bay	Column logical device	Column information	Column value text	Indication type	Entry in event list	Entry in alarm list	Acknowledge	Display in indication area	Indication class	Entry in SML	Display in diagram	Archive	Operational indications	Protection indications	Command derivation	Tel ctrl FP/SC	Command output
	19	R110	EA06	7UT512	NASTAVENIE LED ZOBR.		22	27	32	39	0	TR	O	N				N	N	R	N	Y		N	N
	22	R110	EA06	7UT512	PARAMETRIZACIA OCHRANY	KON ZAC	22	27	32	39	75	SI	R/C	N				N	N	R/C	N	Y		N	N
	23	R110	EA06	7UT512	PARAMETRIZ.AKT.SADA A	KON ZAC	22	27	32	39	75	SI	R/C	N				N	N	R/C	N	Y		N	N
	24	R110	EA06	7UT512	PARAMETRIZ.AKT.SADA B	KON ZAC	22	27	32	39	75	SI	R/C	N				N	N	R/C	N	Y		N	N
	25	R110	EA06	7UT512	PARAMETRIZ.AKT.SADA C	KON ZAC	22	27	32	39	75	SI	R/C	N				N	N	R/C	N	Y		N	N
	26	R110	EA06	7UT512	PARAMETRIZ.AKT.SADA D	KON ZAC	22	27	32	39	75	SI	R/C	N				N	N	R/C	N	Y		N	N
	27	R110	EA06	7UT512	OCHRANA NADOBY VYPNUTIE	KON ZAC	22	27	0	39	75	SI	R/C	Y	R/C	Y	1	N	N	R/C	N	Y	Alarm 1 (Hupenbefehl)	N	N
	68	R110	EA06	7UT512	DIF.O:VYP.IMPULZ		22	27	32	39		TR	O	Y	O	Y	1	N	N	R	N	Y	Alarm 1 (Hupenbefehl)	N	N
	86	R110	EA06	7UT512	DIF.O:VYP.IMP.L1		22	27	32	39		TR	O	Y	O	Y	1	N	N	R	N	Y	Alarm 1 (Hupenbefehl)	N	N
	87	R110	EA06	7UT512	DIF.O:VYP.IMP.L2		22	27	32	39		TR	O	Y	O	Y	1	N	N	R	N	Y	Alarm 1 (Hupenbefehl)	N	N
	88	R110	EA06	7UT512	DIF.O:VYP.IMP.L3		22	27	32	39		TR	O	Y	O	Y	1	N	N	R	N	Y	Alarm 1 (Hupenbefehl)	N	N
51	131	R110	EA06	7UT512	VAZBA 1 JE VYPNUTA	KON ZAC	22	27	32	39	75	SI	R/C	N				N	N	R/C	N	Y		N	N
51	133	R110	EA06	7UT512	VAZBA 1 V CINNOSTI	KON ZAC	22	27	32	39	75	SI	R/C	N				N	N	R/C	N	Y		N	N
51	136	R110	EA06	7UT512	VAZBA 1 POPUD	KON ZAC	22	27	32	39	78	SI	R/C	Y	R/C	Y	1	N	N	R/C	N	Y	Alarm 1 (Hupenbefehl)	N	N
51	137	R110	EA06	7UT512	VAZBA 1 VYP.IMPULZ		22	27	32	39		TR	O	Y	O	Y	1	N	N	R	N	Y	Alarm 1 (Hupenbefehl)	N	N
62	101	R110	EA06	7UT512	REZ.NADPR.O.VYPNUTA	KON ZAC	22	27	32	39	75	SI	R/C	N				N	N	R/C	N	Y		N	N
62	102	R110	EA06	7UT512	REZ.NADPR.O.BLOKOV.	KON ZAC	22	27	32	39	75	SI	R/C	N				N	N	R/C	N	Y		N	N
62	103	R110	EA06	7UT512	REZ.NADPR.O. V CINN.	KON ZAC	22	27	32	39	75	SI	R/C	N				N	N	R/C	N	Y		N	N
62	111	R110	EA06	7UT512	REZ.GEN.POPUD		22	27	32	39		TR	O	Y	O	Y	1	N	N	R	N	Y	Alarm 1 (Hupenbefehl)	N	N
62	112	R110	EA06	7UT512	REZ.POPUD V L1	KON ZAC	22	27	32	39	78	SI	R/C	Y	R/C	Y	1	N	N	R/C	N	Y	Alarm 1 (Hupenbefehl)	N	N
62	113	R110	EA06	7UT512	REZ.POPUD V L2	KON ZAC	22	27	32	39	78	SI	R/C	Y	R/C	Y	1	N	N	R/C	N	Y	Alarm 1 (Hupenbefehl)	N	N
62	114	R110	EA06	7UT512	REZ.POPUD V L3	KON ZAC	22	27	32	39	78	SI	R/C	Y	R/C	Y	1	N	N	R/C	N	Y	Alarm 1 (Hupenbefehl)	N	N
62	121	R110	EA06	7UT512	REZ.POPUD SKRAT.ST.		22	27	32	39		TR	O	Y	O	Y	1	N	N	R	N	Y	Alarm 1 (Hupenbefehl)	N	N
62	122	R110	EA06	7UT512	REZ.POPUD NADPR.ST.		22	27	32	39		TR	O	Y	O	Y	1	N	N	R	N	Y	Alarm 1 (Hupenbefehl)	N	N
62	141	R110	EA06	7UT512	REZ.SKRAT.O.CAS		22	27	32	39		TR	O	Y	O	Y	1	N	N	R	N	Y	Alarm 1 (Hupenbefehl)	N	N
62	142	R110	EA06	7UT512	REZ.NADPR.O.CAS		22	27	32	39		TR	O	Y	O	Y	1	N	N	R	N	Y	Alarm 1 (Hupenbefehl)	N	N
62	151	R110	EA06	7UT512	REZ.GEN.VYP.IMPULZ		22	27	32	39		TR	O	Y	O	Y	1	N	N	R	N	Y	Alarm 1 (Hupenbefehl)	N	N
75	15	R110	EA06	7UT512	DIF.O:VYPNUTA	KON ZAC	22	27	32	39	75	SI	R/C	N				N	N	R/C	N	Y		N	N
75	16	R110	EA06	7UT512	DIF.O:BLOKOVANA	KON ZAC	22	27	32	39	75	SI	R/C	N				N	N	R/C	N	Y		N	N
75	17	R110	EA06	7UT512	DIF.O:V CINNOSTI	KON ZAC	22	27	32	39	75	SI	R/C	N				N	N	R/C	N	Y		N	N
75	21	R110	EA06	7UT512	DIF.O: ONESK.IDIFF>		22	27	32	39		TR	O	Y	O	Y	1	N	N	R	N	Y	Alarm 1 (Hupenbefehl)	N	N
75	22	R110	EA06	7UT512	DIF.O: ONESK.IDIFF>>		22	27	32	39		TR	O	Y	O	Y	1	N	N	R	N	Y	Alarm 1 (Hupenbefehl)	N	N

Documentation structur: Standard
Source file: KO050722.ODA

Date	22.07.2005	VSZ KOSICE	SIEMENS AG ISATOOLS
Drawn	LANG		
Appr.			
Norm		Orig./Repl. 1/Repl. by	

Substation control system 6MB
Numerical protection device:
Indications
Table

T = /BE 40
+
-S104
Page

Remarks | Date | Name

Station:

Device: EA06 7UT512
Device type: 7UT51
Function type: 7UT51
Manufact.: SIEMENS

Packet number: 3
Version number: 0

Connection Device: EA06 EAG
Subrack: EA06 7UT512
Module:
Comm. processor:
Channel connection
UART: 2
MUX:

Function type	Info number	Section	Bay	Logical device	Lower limit	Value text	Column section	Column bay	Column logical device	Column information	Column value text	Indication type	Entry in event list	Entry in alarm list	Acknowledge	Display in indication area	Indication class	Entry in SML	Display in diagram	Archive	Operational indications	Protection indications	Command derivation	Tel ctrl FP/SC	Command output
75	31	R110	EA06	7UT512	DIF.O:GEN.POPUD	KON ZAC	22	27	32	39	78	SI	R/C	Y	R/C	Y	1	N	N	R/C	N	Y	Alarm 1 (Hupenbefehl)	N	N
75	81	R110	EA06	7UT512	DIF.O:NADPR.VYP.IMP.L1	KON ZAC	22	27	32	39	78	SI	R/C	Y	R/C	Y	1	N	N	R/C	N	Y	Alarm 1 (Hupenbefehl)	N	N
75	82	R110	EA06	7UT512	DIF.O:NADPR.VYP.IMP.L2	KON ZAC	22	27	32	39	78	SI	R/C	Y	R/C	Y	1	N	N	R/C	N	Y	Alarm 1 (Hupenbefehl)	N	N
75	83	R110	EA06	7UT512	DIF.O:NADPR.VYP.IMP.L3	KON ZAC	22	27	32	39	78	SI	R/C	Y	R/C	Y	1	N	N	R/C	N	Y	Alarm 1 (Hupenbefehl)	N	N
75	84	R110	EA06	7UT512	DIF.O:SKRAT.VYP.IMP.L1	KON ZAC	22	27	32	39	78	SI	R/C	Y	R/C	Y	1	N	N	R/C	N	Y	Alarm 1 (Hupenbefehl)	N	N
75	85	R110	EA06	7UT512	DIF.O:SKRAT.VYP.IMP.L2	KON ZAC	22	27	32	39	78	SI	R/C	Y	R/C	Y	1	N	N	R/C	N	Y	Alarm 1 (Hupenbefehl)	N	N
75	86	R110	EA06	7UT512	DIF.O:SKRAT.VYP.IMP.L3	KON ZAC	22	27	32	39	78	SI	R/C	Y	R/C	Y	1	N	N	R/C	N	Y	Alarm 1 (Hupenbefehl)	N	N
75	91	R110	EA06	7UT512	DIF.O:NADPR.ST.VYP.IMP		22	27	32	39		TR	O	Y	O	Y	1	N	N	R	N	Y	Alarm 1 (Hupenbefehl)	N	N
75	92	R110	EA06	7UT512	DIF.O:SKRAT.ST.VYP.IMP		22	27	32	39		TR	O	Y	O	Y	1	N	N	R	N	Y	Alarm 1 (Hupenbefehl)	N	N
135	81	R110	EA06	7UT512	OCHRANA PRIPRAVENA	KON ZAC	22	27	32	39	75	SI	R/C	N				N	N	R/C	N	Y		N	N
135	130	R110	EA06	7UT512	BUFER SIGN. PREPLNENY		22	27	32	39	0	TR	O	N				N	N	R	N	Y		N	N
135	131	R110	EA06	7UT512	STRATA SIGN. PRE LSA		22	27	32	39	0	TR	O	N				N	N	R	N	Y		N	N
135	166	R110	EA06	7UT512	PORUCHA V/V JEDN.C.1	KON ZAC	22	27	32	39	75	SI	R/C	N				N	N	R/C	N	Y		N	N
135	167	R110	EA06	7UT512	PORUCHA V/V JEDN.C.2	KON ZAC	22	27	32	39	75	SI	R/C	N				N	N	R/C	N	Y		N	N
135	231	R110	EA06	7UT512	PORUCHA V ENERG. SYST.	KON ZAC	22	27	32	39	78	SI	R/C	Y	R/C	Y	1	N	N	R/C	N	Y	Alarm 1 (Hupenbefehl)	N	N
150	42	R110	EA06	7UT512	BUCHHOLZ VYPNUTIE	KON ZAC	22	27	0	39	75	SI	R/C	Y	R/C	Y	1	N	N	R/C	N	Y	Alarm 1 (Hupenbefehl)	N	N
150	151	R110	EA06	7UT512	SUM.POSOBENIE OCHR.		22	27	32	39	0	TR	O	Y	O	Y	1	N	N	R	N	Y	Alarm 1 (Hupenbefehl)	N	N
150	152	R110	EA06	7UT512	SUM.ZRUS.POSOB.OCHR.		22	27	32	39	0	TR	O	Y	O	Y	1	N	N	R	N	Y	Alarm 1 (Hupenbefehl)	N	N
150	161	R110	EA06	7UT512	SUM.GEN.VYP.IMPULZ		22	27	32	39	0	TR	O	Y	O	Y	1	N	N	R	N	Y	Alarm 1 (Hupenbefehl)	N	N
167	61	R110	EA06	7UT512	O.PRETAZ.1 VYPNUTA	KON ZAC	22	27	32	39	75	SI	R/C	N				N	N	R/C	N	Y		N	N
167	62	R110	EA06	7UT512	O.PRETAZ.1 BLOKOV.	KON ZAC	22	27	32	39	75	SI	R/C	N				N	N	R/C	N	Y		N	N
167	63	R110	EA06	7UT512	O.PRETAZ.1 V CINN.	KON ZAC	22	27	32	39	75	SI	R/C	N				N	N	R/C	N	Y		N	N
167	65	R110	EA06	7UT512	O.PRETAZ.1 PRUD.VYSTR	KON ZAC	22	27	32	39	75	SI	R/C	N				N	N	R/C	N	Y		N	N
167	66	R110	EA06	7UT512	O.PRETAZ.1 TEPEL.VYSTR	KON ZAC	22	27	32	39	75	SI	R/C	N				N	N	R/C	N	Y		N	N
167	71	R110	EA06	7UT512	O.PRETAZ.1 VYP.POVEL	KON ZAC	22	27	32	39	78	SI	R/C	Y	R/C	Y	1	N	N	R/C	N	Y	Alarm 1 (Hupenbefehl)	N	N
167	111	R110	EA06	7UT512	O.PRETAZ.2 VYPNUTA	KON ZAC	22	27	32	39	75	SI	R/C	N				N	N	R/C	N	Y		N	N
167	112	R110	EA06	7UT512	O.PRETAZ.2 BLOKOV.	KON ZAC	22	27	32	39	75	SI	R/C	N				N	N	R/C	N	Y		N	N
167	113	R110	EA06	7UT512	O.PRETAZ.2 V CINN.	KON ZAC	22	27	32	39	75	SI	R/C	N				N	N	R/C	N	Y		N	N
167	115	R110	EA06	7UT512	O.PRETAZ.2 PRUD.VYSTR	KON ZAC	22	27	32	39	75	SI	R/C	N				N	N	R/C	N	Y		N	N
167	116	R110	EA06	7UT512	O.PRETAZ.2 TEPEL.VYSTR	KON ZAC	22	27	32	39	75	SI	R/C	N				N	N	R/C	N	Y		N	N
167	121	R110	EA06	7UT512	O.PRETAZ.2 VYP.POVEL	KON ZAC	22	27	32	39	78	SI	R/C	Y	R/C	Y	1	N	N	R/C	N	Y	Alarm 1 (Hupenbefehl)	N	N

Proprietary data, company confidential. All rights reserved
Contiene datos de secreto de empresa. Todos los derechos reservados
Contenuto di carattere riservato aziendale. Riservato tutti i diritti
Confidentiel de société. Tous droits réservés
Confidencial como segredo empresarial. Reservados todos os direitos
Confidencial como secreto industrial. Nos reservamos todos los derechos.
The reproduction, transmission or use of this document or its contents is not permitted without express written authority. Offenders will be liable for damages. All rights, including rights created by patent grant or registration of a utility model or design, are reserved

Documentation structur: Standard
Source file: KO050722.ODA

Rev.	Remarks	Date	Name	Norm

Date 22.07.2005
Drawn LANG
Appr.

VSZ KOSICE
Orig./Repl. 1/Repl. by

SIEMENS AG
ISATOOLS

Substation control system 6MB
Numerical protection device:
Indications
Table

T = /BE 41
+
-S104
Page 41

Proprietary data, company confidential. All rights reserved
Confe a titre de secret d'entreprise. Tous droits r.serv.
Comunicado como segredo empresarial. Reservados todos os direitos.
Confiado como secreto industrial. Nos reservamos todos los derechos.
The reproduction, transmission or use of this document or its contents is not permitted without express written authority. Offenders will be liable for damages. All rights, including rights created by patent grant or registration of a utility model or design, are reserved

Station:

Device EA07 7SJ512
Device type: 7SJ512
Function type: 7SJ512
Manufact.: SIEMENS

Packet number: 3
Version number: 0

Connection Device: EA07 EAG
Subrack: EA07 7SJ512
Module:
Comm. processor:
Channel connection
UART: 2
MUX:

Function type	Info number	Section	Bay	Logical device	Lower limit	Value text	Column section	Column bay	Column logical device	Column information	Column value text	Indication type	Entry in event list	Entry in alarm list	Acknowledge	Display in indication area	Indication class	Entry in SML	Display in diagram	Archive	Operational indications	Protection indications
	19	R110	EA07	7SJ512	NASTAVENIE LED ZOBR.		22	27	32	39	0	TR	O	N				N	N	R	N	Y
	22	R110	EA07	7SJ512	PARAMETRIZACIA OCHRANY	KON ZAC	22	27	32	39	75	SI	R/C	N				N	N	R/C	N	Y
	27	R110	EA07	7SJ512	ANWENDERDEF. MELDUNG 1	KON ZAC	22	27	32	39	75	SI	N	N				N	N	N		
	28	R110	EA07	7SJ512	ANWENDERDEF. MELDUNG 2	KON ZAC	22	27	32	39	75	SI	N	N				N	N	N		
	29	R110	EA07	7SJ512	ANWENDERDEF. MELDUNG 3	KON ZAC	22	27	32	39	75	SI	N	N				N	N	N		
	30	R110	EA07	7SJ512	ANWENDERDEF. MELDUNG 4	KON ZAC	22	27	32	39	75	SI	N	N				N	N	N		
	32	R110	EA07	7SJ512	PORUCHA MER. PRUDU	KON ZAC	22	27	32	39	75	SI	R/C	N				N	N	R/C	N	Y
	33	R110	EA07	7SJ512	PORUCHA MER.NAPATIA	KON ZAC	22	27	32	39	75	SI	R/C	N				N	N	R/C	N	Y
	36	R110	EA07	7SJ512	KONTROLA VYST.JEDN.	KON ZAC	22	27	32	39	75	SI	R/C	N				N	N	R/C	N	Y
	48	R110	EA07	7SJ512	ZEMNE SPOJENIE V L1	KON ZAC	22	27	32	39	75	SI	N	N				N	N	N		
	49	R110	EA07	7SJ512	ZEMNE SPOJENIE V L2	KON ZAC	22	27	32	39	75	SI	N	N				N	N	N		
	50	R110	EA07	7SJ512	ZEMNE SPOJENIE V L3	KON ZAC	22	27	32	39	75	SI	N	N				N	N	N		
	68	R110	EA07	7SJ512	NADPR.O.GEN.VYP.IMP		22	27	32	39		TR	O	Y	O	Y	1	N	N	R	N	Y
	74	R110	EA07	7SJ512	SUM.VYP.IMP.VPRED		22	27	32	39		TR	O	Y	O	Y	1	N	N	R	N	Y
	75	R110	EA07	7SJ512	SUM.VYP.IMP.VZAD		22	27	32	39		TR	O	Y	O	Y	1	N	N	R	N	Y
	84	R110	EA07	7SJ512	NADPR.OCHR.GEN.POPUD	KON ZAC	22	27	32	39	78	SI	R/C	Y	R/C	Y	1	N	N	R/C	N	Y
	90	R110	EA07	7SJ512	NADPR.OCHR.VYP.IMP2		22	27	32	39		TR	O	N				N	N	N		
	91	R110	EA07	7SJ512	SKRAT.OCHR.VYP.IMP.		22	27	32	39		TR	O	Y	O	Y	1	N	N	R	N	Y
60	46	R110	EA07	7SJ512	SKRAT.OCHR.POPUD L1	KON ZAC	22	27	32	39	78	SI	R/C	Y	R/C	Y	1	N	N	R/C	N	Y
60	47	R110	EA07	7SJ512	SKRAT.OCHR.POPUD L2	KON ZAC	22	27	32	39	78	SI	R/C	Y	R/C	Y	1	N	N	R/C	N	Y
60	48	R110	EA07	7SJ512	SKRAT.OCHR.POPUD L3	KON ZAC	22	27	32	39	78	SI	R/C	Y	R/C	Y	1	N	N	R/C	N	Y
60	49	R110	EA07	7SJ512	SKRAT.OCHR.CAS		22	27	32	39		TR	O	Y	O	Y	1	N	N	R	N	Y
60	50	R110	EA07	7SJ512	NADPR.OCHR.POPUD L1	KON ZAC	22	27	32	39	78	SI	R/C	Y	R/C	Y	1	N	N	R/C	N	Y
60	51	R110	EA07	7SJ512	NADPR.OCHR.POPUD L2	KON ZAC	22	27	32	39	78	SI	R/C	Y	R/C	Y	1	N	N	R/C	N	Y
60	52	R110	EA07	7SJ512	NADPR.OCHR.POPUD L3	KON ZAC	22	27	32	39	78	SI	R/C	Y	R/C	Y	1	N	N	N		
60	53	R110	EA07	7SJ512	NADPR.OCHR.CAS		22	27	32	39		TR	O	Y	O	Y	1	N	N	R	N	Y
63	21	R110	EA07	7SJ512	NADPR.SMER.POPUD L1	KON ZAC	22	27	32	39	78	SI	R/C	Y	R/C	Y	1	N	N	R/C	N	Y
63	22	R110	EA07	7SJ512	NADPR.SMER.POPUD L2	KON ZAC	22	27	32	39	78	SI	R/C	Y	R/C	Y	1	N	N	R/C	N	Y
63	23	R110	EA07	7SJ512	NADPR.SMER.POPUD L3	KON ZAC	22	27	32	39	78	SI	R/C	Y	R/C	Y	1	N	N	R/C	N	Y
63	24	R110	EA07	7SJ512	NADPR.SMER.OCHR.CAS		22	27	32	39		TR	O	Y	O	Y	1	N	N	R	N	Y
135	81	R110	EA07	7SJ512	OCHRANA PRIPRAVENA	KON ZAC	22	27	32	39	75	SI	R/C	N				N	N	R/C	N	Y
135	130	R110	EA07	7SJ512	BUFER SIGN. PREPLNENY		22	27	32	39	0	TR	O	N				N	N	R	N	Y

Documentation structur: Standard
Source file: KO050722.ODA

			Date	22.07.2005	VSZ KOSICE
			Drawn	LANG	
			Appr.		
Remarks	Date	Name	Norm		Orig./Repl. 1/Repl. by

SIEMENS AG
ISAIOOLS

Substation control system 6MB
Numerical protection device:
Indications
Table

T = /BE 42
+
-S104
Page

Proprietary data, company confidential. All rights reserved
Confie a ttre de secret d'entreprise. Tous dro'ts rsers'v's.
Comunicado como segredo empresarial. Reservados todos os direitos.
Confiado como secreto industrial. Nos reservamos todos los derechos.
The reproduction, transmission or use of this document or its
is not permitted without expres written authority.
Offenders will be liable for damages. All rights, including rights
created by patent grant or registration of a utility model or design, are reserved.

Station:

Device EA07 7SJ512
Device type: 7SJ512
Function type: 7SJ512
Manufact.: SIEMENS

Packet number: 3
Version number: 0

Connection Device: EA07 EAG
Subrack: EA07 7SJ512
Module:
Comm. processor:
Channel connection
UART: 2
MUX:

Function type	Info number	Command derivation	Indication derivation	FP/SC (Tel ctrl)	Command output
	19			N	N
	22			N	N
	27		7SJ512 ROZPOJINIE OCHRANAMIE	N	N
	28			N	N
	29			N	N
	30			N	N
	32			N	N
	33			N	N
	36			N	N
	48			N	N
	49			N	N
	50			N	N
	68	Alarm 1 (Hupenbefehl)		N	N
	74	Alarm 1 (Hupenbefehl)		N	N
	75	Alarm 1 (Hupenbefehl)		N	N
	84	Alarm 1 (Hupenbefehl)		N	N
	90			N	N
	91	Alarm 1 (Hupenbefehl)		N	N
60	46	Alarm 1 (Hupenbefehl)		N	N
60	47	Alarm 1 (Hupenbefehl)		N	N
60	48	Alarm 1 (Hupenbefehl)		N	N
60	49	Alarm 1 (Hupenbefehl)		N	N
60	50	Alarm 1 (Hupenbefehl)		N	N
60	51	Alarm 1 (Hupenbefehl)		N	N
60	52	Alarm 1 (Hupenbefehl)		N	N
60	53	Alarm 1 (Hupenbefehl)		N	N
63	21	Alarm 1 (Hupenbefehl)		N	N
63	22	Alarm 1 (Hupenbefehl)		N	N
63	23	Alarm 1 (Hupenbefehl)		N	N
63	24	Alarm 1 (Hupenbefehl)		N	N
135	81			N	N
135	130			N	N

Documentation structur: Standard
Source file: KO050722.ODA

Proprietary data, company confidential. All rights reserved
Confie a titre de secret d'entreprise. Tous droits réservés.
Comunicado como segredo empresarial. Reservados todos os direitos.
Confiado como secreto industrial. Nos reservamos todos los derechos.
The reproduction, transmission or use of this document or its is not permitted without express written authority.
Offenders will be liable for damages. All rights, including rights created by patent grant or registration of a utility model or design, are reserved.

Station:
Device EA07 7SJ512
Device type: 7SJ512
Function type: 7SJ512
Manufact.: SIEMENS

Packet number: 3
Version number: 0

Connection Device: EA07 EAG
Subrack: EA07 7SJ512
Module:
Comm. processor:
Channel connection
UART: 2
MUX:

Function type	Info number	Section	Bay	Logical device	Lower limit	Value text	Column section	Column bay	Column logical device	Column information	Column value text	Indication type	Entry in event list	Entry in alarm list	Acknowledge	Display in indication area	Indication class	Entry in SML	Display in diagram	Archive	Operational indications	Protection indications
135	131	R110	EA07	7SJ512	STRATA SIGN. PRE LSA		22	27	32	39	0	TR	O	N				N	N	R	N	Y
135	170	R110	EA07	7SJ512	PORUCHA V/V JEDNOTKY	KON ZAC	22	27	32	39	75	SI	R/C	N				N	N	R/C	N	Y
135	231	R110	EA07	7SJ512	PORUCHA NAPAJ.OCHR.	KON ZAC	22	27	32	39	78	SI	R/C	Y	R/C	Y	1	N	N	R/C	N	Y
150	151	R110	EA07	7SJ512	SUM.POSOBENIE OCHR.		22	27	32	39	0	TR	O	Y	O	Y	1	N	N	R	N	Y
150	152	R110	EA07	7SJ512	SUM.ZRUS.POSOB.OCHR.		22	27	32	39	0	TR	O	Y	O	Y	1	N	N	R	N	Y
150	161	R110	EA07	7SJ512	SUM.GEN.VYP.IMPULZ		22	27	32	39	0	TR	O	Y	O	Y	1	N	N	R	N	Y
150	171	R110	EA07	7SJ512	VYPIN.PRUD. L1 I/In=		22	27	32	39	0	NV	O	Y	O	Y	1	N	N	R	N	Y
150	172	R110	EA07	7SJ512	VYPIN.PRUD. L2 I/In=		22	27	32	39	0	NV	O	Y	O	Y	1	N	N	R	N	Y
150	173	R110	EA07	7SJ512	VYPIN.PRUD. L3 I/In=		22	27	32	39	0	NV	O	Y	O	Y	1	N	N	R	N	Y
167	11	R110	EA07	7SJ512	O.PRETAZ. VYPNUTA	KON ZAC	22	27	32	39	75	SI	R/C	N				N	N	R/C	N	Y
167	12	R110	EA07	7SJ512	O.PRETAZ. BLOKOV.	KON ZAC	22	27	32	39	75	SI	R/C	N				N	N	R/C	N	Y
167	13	R110	EA07	7SJ512	O.PRETAZ. V CINNOSTI	KON ZAC	22	27	32	39	75	SI	R/C	N				N	N	R/C	N	Y
167	15	R110	EA07	7SJ512	O.PRETAZ. PRUD.VYSTR	KON ZAC	22	27	32	39	75	SI	R/C	N				N	N	R/C	N	Y
167	16	R110	EA07	7SJ512	O.PRETAZ. TEPEL.VYSTR	KON ZAC	22	27	32	39	75	SI	R/C	N				N	N	R/C	N	Y
167	21	R110	EA07	7SJ512	O.PRETAZ. VYP.POVEL		22	27	32	39		TR	O	N				N	N	R	N	Y

Documentation structur: Standard
Source file: K0050722.ODA

Date 22.07.2005
Drawn LANG
Appr.
Remarks Date Name Norm Orig./Repl. 1/Repl. by

VSZ
KOSICE

SIEMENS AG
ISA|OOLS

Substation control system 6MB
Numerical protection device:
Indications
Table

T = /BE 44
+
-S104
Page

Station:

Device EA07 7SJ512
Device type: 7SJ512
Function type: 7SJ512
Manufact.: SIEMENS

Packet number: 3
Version number: 0

Connection Device: EA07 EAG
Subrack: EA07 7SJ512
Module:
Comm. processor:
Channel connection
UART: 2
MUX:

Function type	Info number	Command derivation	Indication derivation	Tel ctrl FP/SC	Command output
135	131			N	N
135	170			N	N
135	231	Alarm 1 (Hupenbefehl)		N	N
150	151	Alarm 1 (Hupenbefehl)		N	N
150	152	Alarm 1 (Hupenbefehl)		N	N
150	161	Alarm 1 (Hupenbefehl)		N	N
150	171	Alarm 1 (Hupenbefehl)		N	N
150	172	Alarm 1 (Hupenbefehl)		N	N
150	173	Alarm 1 (Hupenbefehl)		N	N
167	11			N	N
167	12			N	N
167	13			N	N
167	15			N	N
167	16			N	N
167	21			N	N

Proprietary data, company confidential. All rights reserved.
Confie a titre de secret d'entreprise. Tous droits reservs.
Comunicado como segredo empresarial. Reservados todos os direitos.
Confiado como secreto industrial. Nos reservamos todos los derechos.

The reproduction, transmission or use of theis document or its is not permitted without expres written authority.
Offenders will be liable for damages. All rights, including rights created by patent grant or registration of a utility model or design, are reserved.

Documentation structur: Standard
Source file: KO050722.ODA

Rev.	Remarks	Date	Name	Date	22.07.2005	VSZ KOSICE	SIEMENS AG ISA TOOLS	Substation control system 6MB Numerical protection device: Indications Table	T = /BE 45 + -S104	Page 45
				Drawn	LANG					
				Appr.						
				Norm		Orig./Repl. 1/Repl. by				

Proprietary data, company confidential. All rights reserved.
Confia a tre ds secret d'entreprise. Tous droits r,serv,s.
Comunicado como segredo empresarial. Reservados todos os direitos.
Confiado como secreto industrial. Nos reservamos todos los derechos.
The reproduction, transmission or use of this document or its contents is not permitted without express written authority. Offenders will be liable for damages. All rights, including rights created by patent grant or registration of a utility model or design, are reserved.

Station:

Device EA08 7SJ512
Device type: 7SJ512
Function type: 7SJ512
Manufact.: SIEMENS

Packet number: 3
Version number: 0

Connection Device: EA08 EAG
Subrack: EA08 7SJ512
Module:
Comm. processor:
Channel connection
UART: 2
MUX:

Function type	Info number	Section	Bay	Logical device	Lower limit	Value text	Column section	Column bay	Column logical device	Column information	Column value text	Indication type	Entry in event list	Entry in alarm list	Acknowledge	Display in indication area	Indication class	Entry in SML	Display in diagram	Archive	Operational indications	Protection indications
	19	R110	EA08	7SJ512	NASTAVENIE LED ZOBR.		22	27	32	39	0	TR	O	N				N	N	R	N	Y
	22	R110	EA08	7SJ512	PARAMETRIZACIA OCHRANY	KON ZAC	22	27	32	39	75	SI	R/C	N				N	N	R/C	N	Y
	27	R110	EA08	7SJ512	ANWENDERDEF. MELDUNG 1	KON ZAC	22	27	32	39	75	SI	N	N				N	N	N		
	28	R110	EA08	7SJ512	ANWENDERDEF. MELDUNG 2	KON ZAC	22	27	32	39	75	SI	N	N				N	N	N		
	29	R110	EA08	7SJ512	ANWENDERDEF. MELDUNG 3	KON ZAC	22	27	32	39	75	SI	N	N				N	N	N		
	30	R110	EA08	7SJ512	ANWENDERDEF. MELDUNG 4	KON ZAC	22	27	32	39	75	SI	N	N				N	N	N		
	32	R110	EA08	7SJ512	PORUCHA MER. PRUDU	KON ZAC	22	27	32	39	75	SI	R/C	N				N	N	R/C	N	Y
	33	R110	EA08	7SJ512	PORUCHA MER.NAPATIA	KON ZAC	22	27	32	39	75	SI	R/C	N				N	N	R/C	N	Y
	36	R110	EA08	7SJ512	KONTROLA VYST.JEDN.	KON ZAC	22	27	32	39	75	SI	R/C	N				N	N	R/C	N	Y
	48	R110	EA08	7SJ512	ZEMNE SPOJENIE V L1	KON ZAC	22	27	32	39	75	SI	N	N				N	N	N		
	49	R110	EA08	7SJ512	ZEMNE SPOJENIE V L2	KON ZAC	22	27	32	39	75	SI	N	N				N	N	N		
	50	R110	EA08	7SJ512	ZEMNE SPOJENIE V L3	KON ZAC	22	27	32	39	75	SI	N	N				N	N	N		
	68	R110	EA08	7SJ512	NADPR.O.GEN.VYP.IMP		22	27	32	39		TR	O	Y	O	Y	1	N	N	R	N	Y
	74	R110	EA08	7SJ512	SUM.VYP.IMP.VPRED		22	27	32	39		TR	O	Y	O	Y	1	N	N	R	N	Y
	75	R110	EA08	7SJ512	SUM.VYP.IMP.VZAD		22	27	32	39		TR	O	Y	O	Y	1	N	N	R	N	Y
	84	R110	EA08	7SJ512	NADPR.OCHR.GEN.POPUD	KON ZAC	22	27	32	39	78	SI	R/C	Y	R/C	Y	1	N	N	R/C	N	Y
	90	R110	EA08	7SJ512	NADPR.OCHR.VYP.IMP2		22	27	32	39		TR	O	N				N	N	N		
	91	R110	EA08	7SJ512	SKRAT.OCHR.VYP.IMP.		22	27	32	39		TR	O	Y	O	Y	1	N	N	R	N	Y
60	46	R110	EA08	7SJ512	SKRAT.OCHR.POPUD L1	KON ZAC	22	27	32	39	78	SI	R/C	Y	R/C	Y	1	N	N	R/C	N	Y
60	47	R110	EA08	7SJ512	SKRAT.OCHR.POPUD L2	KON ZAC	22	27	32	39	78	SI	R/C	Y	R/C	Y	1	N	N	R/C	N	Y
60	48	R110	EA08	7SJ512	SKRAT.OCHR.POPUD L3	KON ZAC	22	27	32	39	78	SI	R/C	Y	R/C	Y	1	N	N	R/C	N	Y
60	49	R110	EA08	7SJ512	SKRAT.OCHR.CAS		22	27	32	39		TR	O	Y	O	Y	1	N	N	R	N	Y
60	50	R110	EA08	7SJ512	NADPR.OCHR.POPUD L1	KON ZAC	22	27	32	39	78	SI	R/C	Y	R/C	Y	1	N	N	R/C	N	Y
60	51	R110	EA08	7SJ512	NADPR.OCHR.POPUD L2	KON ZAC	22	27	32	39	78	SI	R/C	Y	R/C	Y	1	N	N	R/C	N	Y
60	52	R110	EA08	7SJ512	NADPR.OCHR.POPUD L3	KON ZAC	22	27	32	39	78	SI	R/C	Y	R/C	Y	1	N	N	N		
60	53	R110	EA08	7SJ512	NADPR.OCHR.CAS		22	27	32	39		TR	O	Y	O	Y	1	N	N	R	N	Y
63	21	R110	EA08	7SJ512	NADPR.SMER.POPUD L1	KON ZAC	22	27	32	39	78	SI	R/C	Y	R/C	Y	1	N	N	R/C	N	Y
63	22	R110	EA08	7SJ512	NADPR.SMER.POPUD L2	KON ZAC	22	27	32	39	78	SI	R/C	Y	R/C	Y	1	N	N	R/C	N	Y
63	23	R110	EA08	7SJ512	NADPR.SMER.POPUD L3	KON ZAC	22	27	32	39	78	SI	R/C	Y	R/C	Y	1	N	N	R/C	N	Y
63	24	R110	EA08	7SJ512	NADPR.SMER.OCHR.CAS		22	27	32	39		TR	O	Y	O	Y	1	N	N	R	N	Y
135	81	R110	EA08	7SJ512	OCHRANA PRIPRAVENA	KON ZAC	22	27	32	39	75	SI	R/C	N				N	N	R/C	N	Y
135	130	R110	EA08	7SJ512	BUFER SIGN. PREPLNENY		22	27	32	39	0	TR	O	N				N	N	R	N	Y

Documentation structur: Standard
Source file: KO050722.ODA

Date	22.07.2005	VSZ KOSICE	SIEMENS AG iSAtOOLS
Drawn	LANG		
Appr.			
Norm			

Substation control system 6MB
Numerical protection device:
Indications
Table

T = /BE 46
+
-S104
Page

Rr Remarks Date Name Orig./Repl. 1/Repl. by

Station:
Device EA08 7SJ512
Device type: 7SJ512
Function type: 7SJ512
Manufact.: SIEMENS

Packet number: 3
Version number: 0

Connection Device: EA08 EAG
Subrack: EA08 7SJ512
Module:
Comm. processor:
Channel connection
UART: 2
MUX:

Function type	Info number	Command derivation	Indication derivation	Tel ctrl FP/SC	Command output
	19			N	N
	22			N	N
	27			N	N
	28			N	N
	29		LA203 NADRP.OCHR.POSOBENIE	N	N
	30			N	N
	32			N	N
	33			N	N
	36			N	N
	48			N	N
	49			N	N
	50			N	N
	68	Alarm 1 (Hupenbefehl)		N	N
	74	Alarm 1 (Hupenbefehl)		N	N
	75	Alarm 1 (Hupenbefehl)		N	N
	84	Alarm 1 (Hupenbefehl)		N	N
	90			N	N
	91	Alarm 1 (Hupenbefehl)		N	N
60	46	Alarm 1 (Hupenbefehl)		N	N
60	47	Alarm 1 (Hupenbefehl)		N	N
60	48	Alarm 1 (Hupenbefehl)		N	N
60	49	Alarm 1 (Hupenbefehl)		N	N
60	50	Alarm 1 (Hupenbefehl)		N	N
60	51	Alarm 1 (Hupenbefehl)		N	N
60	52	Alarm 1 (Hupenbefehl)		N	N
60	53	Alarm 1 (Hupenbefehl)		N	N
63	21	Alarm 1 (Hupenbefehl)		N	N
63	22	Alarm 1 (Hupenbefehl)		N	N
63	23	Alarm 1 (Hupenbefehl)		N	N
63	24	Alarm 1 (Hupenbefehl)		N	N
135	81			N	N
135	130			N	N

Proprietary data, company confidential. All rights reserved.
Confie a titre de secret d'entreprise. Tous droits reservés.
Comunicado como segredo empresarial. Reservados todos os direitos.
Confiado como secreto industrial. Nos reservamos todos los derechos.
The reproduction, transmission or use of this document or its is not permitted without express written authority.
Offenders will be liable for damages. All rights, including rights created by patent grant or registration of a utility model or design, are reserved.

Documentation structur: Standard
Source file: KO050722.ODA

Rev.	Remarks	Date	Name	Date	22.07.2005	VSZ KOSICE	SIEMENS AG ISA TOOLS	Substation control system 6MB Numerical protection device: Indications Table	T = /BE 47 + -S104 Page 47
				Drawn	LANG				
				Appr.					
				Norm		Orig./Repl. 1/Repl. by			

Station:

Device EA08 7SJ512
Device type: 7SJ512
Function type: 7SJ512
Manufact.: SIEMENS

Packet number: 3
Version number: 0

Connection Device: EA08 EAG
Subrack: EA08 7SJ512
Module:
Comm. processor:
Channel connection
UART: 2
MUX:

Function type	Info number	Section	Bay	Logical device	Lower limit	Value text	Column section	Column bay	Column logical device	Column information	Column value text	Indication type	Entry in event list	Entry in alarm list	Acknowledge	Display in indication area	Indication class	Entry in SML	Display in diagram	Archive	Operational indications	Protection indications
135	131	R110	EA08	7SJ512	STRATA SIGN. PRE LSA		22	27	32	39	0	TR	O	N				N	N	R	N	Y
135	170	R110	EA08	7SJ512	PORUCHA V/V JEDNOTKY	KON ZAC	22	27	32	39	75	SI	R/C	N				N	N	R/C	N	Y
135	231	R110	EA08	7SJ512	PORUCHA NAPAJ.OCHR.	KON ZAC	22	27	32	39	78	SI	R/C	Y	R/C	Y	1	N	N	R/C	N	Y
150	151	R110	EA08	7SJ512	SUM.POSOBENIE OCHR.		22	27	32	39	0	TR	O	Y	O	Y	1	N	N	R	N	Y
150	152	R110	EA08	7SJ512	SUM.ZRUS.POSOB.OCHR.		22	27	32	39	0	TR	O	Y	O	Y	1	N	N	R	N	Y
150	161	R110	EA08	7SJ512	SUM.GEN.VYP.IMPULZ		22	27	32	39	0	TR	O	Y	O	Y	1	N	N	R	N	Y
150	171	R110	EA08	7SJ512	VYPIN.PRUD. L1 I/In=		22	27	32	39	0	NV	O	Y	O	Y	1	N	N	R	N	Y
150	172	R110	EA08	7SJ512	VYPIN.PRUD. L2 I/In=		22	27	32	39	0	NV	O	Y	O	Y	1	N	N	R	N	Y
150	173	R110	EA08	7SJ512	VYPIN.PRUD. L3 I/In=		22	27	32	39	0	NV	O	Y	O	Y	1	N	N	R	N	Y
167	11	R110	EA08	7SJ512	O.PRETAZ. VYPNUTA	KON ZAC	22	27	32	39	75	SI	R/C	N				N	N	R/C	N	Y
167	12	R110	EA08	7SJ512	O.PRETAZ. BLOKOV.	KON ZAC	22	27	32	39	75	SI	R/C	N				N	N	R/C	N	Y
167	13	R110	EA08	7SJ512	O.PRETAZ. V CINNOSTI	KON ZAC	22	27	32	39	75	SI	R/C	N				N	N	R/C	N	Y
167	15	R110	EA08	7SJ512	O.PRETAZ. PRUD.VYSTR	KON ZAC	22	27	32	39	75	SI	R/C	N				N	N	R/C	N	Y
167	16	R110	EA08	7SJ512	O.PRETAZ. TEPEL.VYSTR	KON ZAC	22	27	32	39	75	SI	R/C	N				N	N	R/C	N	Y
167	21	R110	EA08	7SJ512	O.PRETAZ. VYP.POVEL		22	27	32	39		TR	O	N				N	N	R	N	Y

Proprietary data, company confidential. All rights reserved.
Confia a tire da secret d'entreprise. Tous droits réservés.
Comunicado como segredo empresarial. Reservados todos os direitos.
Confiado como secreto industrial. Nos reservamos todos los derechos.
The reproduction, transmission or use of this document or its is not permitted without expres written authority.
Offenders will be liable for damages. All rights, including rights created by patent grant or registration of a utility model or design, are reserved.

Documentation structur: Standard
Source file: KO050722.ODA

Date	22.07.2005
Drawn	LANG
Appr.	

VSZ KOSICE

SIEMENS AG
SAIOOLS

Substation control system 6MB
Numerical protection device:
Indications
Table

T = /BE 48
+

-S104

Page

Remarks | Date | Name | Norm | Orig./Repl. 1/Repl. by

Station:
Device EA08 7SJ512
Device type: 7SJ512
Function type: 7SJ512
Manufact.: SIEMENS

Packet number: 3
Version number: 0

Connection Device: EA08 EAG
Subrack: EA08 7SJ512
Module:
Comm. processor:
Channel connection
UART: 2
MUX:

Function type	Info number	Command derivation	Indication derivation	Tel ctrl FP/SC	Command output
135	131			N	N
135	170			N	N
135	231	Alarm 1 (Hupenbefehl)		N	N
150	151	Alarm 1 (Hupenbefehl)		N	N
150	152	Alarm 1 (Hupenbefehl)		N	N
150	161	Alarm 1 (Hupenbefehl)		N	N
150	171	Alarm 1 (Hupenbefehl)		N	N
150	172	Alarm 1 (Hupenbefehl)		N	N
150	173	Alarm 1 (Hupenbefehl)		N	N
167	11			N	N
167	12			N	N
167	13			N	N
167	15			N	N
167	16			N	N
167	21			N	N

Proprietary data, company confidential. All rights reserved.
Confie a titre de secret d'entreprise. Tous droits réservés.
Comunicado como segredo empresarial. Reservados todos os direitos.
Confiado como secreto industrial. Nos reservamos todos los derechos.

The reproduction, transmission or use of theis document or its is not permitted without expres written authority.
Offenders will be liable for damages. All rights, including rights created by patent grant or registration of a utility model or design, are reserved.

Documentation structur: Standard
Source file: KO050722.ODA

Rev.	Remarks	Date	Name	Date	22.07.2005
				Drawn	LANG
				Appr.	
				Norm	

VSZ
KOSICE

Orig./Repl. 1/Repl. by

SIEMENS AG
ISA TOOLS

Substation control system 6MB
Numerical protection device:
Indications
Table

T = /BE 49
+
-S104

Proprietary data, company confidential. All rights reserved.
Con la alfa de secret de l'empresa. Tots drets reservats.
Comunicado como segredo empresarial. Reservados todos os direitos.
Comunicado como secreto empresarial. Reservados todos los derechos.
The reproduction, transmission or use of this document or its contents is not permitted without express written authority. Offenders will be liable for damages. All rights, including rights created by patent grant or registration of a utility model or design, are reserved.

Station:
Device EA08 7UT512
Device type: 7UT51
Function type: 7UT51
Manufact.: SIEMENS

Packet number: 3
Version number: 0

Connection Device: EA08 EAG
Subrack: EA08 7UT512
Module:
Comm. processor:
Channel connection
UART: 2
MUX:

Function type	Info number	Section	Bay	Logical device	Lower limit	Value text	Column section	Column bay	Column logical device	Column information	Column value text	Indication type	Entry in event list	Entry in alarm list	Acknowledge	Display in indication area	Indication class	Entry in SML	Display in diagram	Archive	Operational indications	Protection indications	Command derivation	FP/SC	Command output
	19	R110	EA08	7UT512	NASTAVENIE LED ZOBR.		22	27	32	39	0	TR	O	N				N	N	R	N	Y		N	N
	22	R110	EA08	7UT512	PARAMETRIZACIA OCHRANY	KON ZAC	22	27	32	39	75	SI	R/C	N				N	N	R/C	N	Y		N	N
	23	R110	EA08	7UT512	PARAMETRIZ.AKT.SADA A	KON ZAC	22	27	32	39	75	SI	R/C	N				N	N	R/C	N	Y		N	N
	24	R110	EA08	7UT512	PARAMETRIZ.AKT.SADA B	KON ZAC	22	27	32	39	75	SI	R/C	N				N	N	R/C	N	Y		N	N
	25	R110	EA08	7UT512	PARAMETRIZ.AKT.SADA C	KON ZAC	22	27	32	39	75	SI	R/C	N				N	N	R/C	N	Y		N	N
	26	R110	EA08	7UT512	PARAMETRIZ.AKT.SADA D	KON ZAC	22	27	32	39	75	SI	R/C	N				N	N	R/C	N	Y		N	N
	27	R110	EA08	7UT512	OCHRANA NADOBY VYPNUTIE	KON ZAC	22	27	0	39	75	SI	R/C	Y	R/C	Y	1	N	N	R/C	N	Y	Alarm 1 (Hupenbefehl)	N	N
	68	R110	EA08	7UT512	DIF.O:VYP.IMPULZ		22	27	32	39		TR	O	Y	O	Y	1	N	N	R	N	Y	Alarm 1 (Hupenbefehl)	N	N
	86	R110	EA08	7UT512	DIF.O:VYP.IMP.L1		22	27	32	39		TR	O	Y	O	Y	1	N	N	R	N	Y	Alarm 1 (Hupenbefehl)	N	N
	87	R110	EA08	7UT512	DIF.O:VYP.IMP.L2		22	27	32	39		TR	O	Y	O	Y	1	N	N	R	N	Y	Alarm 1 (Hupenbefehl)	N	N
	88	R110	EA08	7UT512	DIF.O:VYP.IMP.L3		22	27	32	39		TR	O	Y	O	Y	1	N	N	R	N	Y	Alarm 1 (Hupenbefehl)	N	N
51	131	R110	EA08	7UT512	VAZBA 1 JE VYPNUTA	KON ZAC	22	27	32	39	75	SI	R/C	N				N	N	R/C	N	Y		N	N
51	133	R110	EA08	7UT512	VAZBA 1 V CINNOSTI	KON ZAC	22	27	32	39	75	SI	R/C	N				N	N	R/C	N	Y		N	N
51	136	R110	EA08	7UT512	VAZBA 1 POPUD	KON ZAC	22	27	32	39	78	SI	R/C	Y	R/C	Y	1	N	N	R/C	N	Y	Alarm 1 (Hupenbefehl)	N	N
51	137	R110	EA08	7UT512	VAZBA 1 VYP.IMPULZ		22	27	32	39		TR	O	Y	O	Y	1	N	N	R	N	Y	Alarm 1 (Hupenbefehl)	N	N
62	101	R110	EA08	7UT512	REZ.NADPR.O.VYPNUTA	KON ZAC	22	27	32	39	75	SI	R/C	N				N	N	R/C	N	Y		N	N
62	102	R110	EA08	7UT512	REZ.NADPR.O.BLOKOV.	KON ZAC	22	27	32	39	75	SI	R/C	N				N	N	R/C	N	Y		N	N
62	103	R110	EA08	7UT512	REZ.NADPR.O. V CINN.	KON ZAC	22	27	32	39	75	SI	R/C	N				N	N	R/C	N	Y		N	N
62	111	R110	EA08	7UT512	REZ.GEN.POPUD		22	27	32	39		TR	O	Y	O	Y	1	N	N	R	N	Y	Alarm 1 (Hupenbefehl)	N	N
62	112	R110	EA08	7UT512	REZ.POPUD V L1	KON ZAC	22	27	32	39	78	SI	R/C	Y	R/C	Y	1	N	N	R/C	N	Y	Alarm 1 (Hupenbefehl)	N	N
62	113	R110	EA08	7UT512	REZ.POPUD V L2	KON ZAC	22	27	32	39	78	SI	R/C	Y	R/C	Y	1	N	N	R/C	N	Y	Alarm 1 (Hupenbefehl)	N	N
62	114	R110	EA08	7UT512	REZ.POPUD V L3	KON ZAC	22	27	32	39	78	SI	R/C	Y	R/C	Y	1	N	N	R/C	N	Y	Alarm 1 (Hupenbefehl)	N	N
62	121	R110	EA08	7UT512	REZ.POPUD SKRAT.ST.		22	27	32	39		TR	O	Y	O	Y	1	N	N	R	N	Y	Alarm 1 (Hupenbefehl)	N	N
62	122	R110	EA08	7UT512	REZ.POPUD NADPR.ST.		22	27	32	39		TR	O	Y	O	Y	1	N	N	R	N	Y	Alarm 1 (Hupenbefehl)	N	N
62	141	R110	EA08	7UT512	REZ.SKRAT.O.CAS		22	27	32	39		TR	O	Y	O	Y	1	N	N	R	N	Y	Alarm 1 (Hupenbefehl)	N	N
62	142	R110	EA08	7UT512	REZ.NADPR.O.CAS		22	27	32	39		TR	O	Y	O	Y	1	N	N	R	N	Y	Alarm 1 (Hupenbefehl)	N	N
62	151	R110	EA08	7UT512	REZ.GEN.VYP.IMPULZ		22	27	32	39		TR	O	Y	O	Y	1	N	N	R	N	Y	Alarm 1 (Hupenbefehl)	N	N
75	15	R110	EA08	7UT512	DIF.O:VYPNUTA	KON ZAC	22	27	32	39	75	SI	R/C	N				N	N	R/C	N	Y		N	N
75	16	R110	EA08	7UT512	DIF.O:BLOKOVANA	KON ZAC	22	27	32	39	75	SI	R/C	N				N	N	R/C	N	Y		N	N
75	17	R110	EA08	7UT512	DIF.O:V CINNOSTI	KON ZAC	22	27	32	39	75	SI	R/C	N				N	N	R/C	N	Y		N	N
75	21	R110	EA08	7UT512	DIF.O: ONESK.IDIFF>		22	27	32	39		TR	O	Y	O	Y	1	N	N	R	N	Y	Alarm 1 (Hupenbefehl)	N	N
75	22	R110	EA08	7UT512	DIF.O: ONESK.IDIFF>>		22	27	32	39		TR	O	Y	O	Y	1	N	N	R	N	Y	Alarm 1 (Hupenbefehl)	N	N

Documentation structur: Standard
Source file: KO050722.ODA

Date	22.07.2005	VSZ KOSICE	SIEMENS AG ISATOOLS
Drawn	LANG		
Appr.			
Norm		Orig./Repl. 1/Repl. by	

Substation control system 6MB
Numerical protection device:
Indications
Table

T = /BE 50
+
-S104
Page

Remarks | Date | Name

Proprietary data, company confidential. All rights reserved.
Confia a ltrada secret d'entreprise. Tous droits reservés.
Comunicado como segredo empresarial. Reservados todos os direitos.
Confiado como secreto industrial. Nos reservamos todos los derechos.
The reproduction, transmission or use of this document or its contents is not permitted without express written authority. Offenders will be liable for damages. All rights, including rights created by patent grant or registration of a utility model or design, are reserved.

Station:

Device EA08 7UT512
Device type: 7UT51
Function type: 7UT51
Manufact.: SIEMENS

Packet number: 3
Version number: 0

Connection Device: EA08 EAG
Subrack: EA08 7UT512
Module:
Comm. processor:
Channel connection
UART: 2
MUX:

Function type	Info number	Section	Bay	Logical device	Lower limit	Value text		Column section	Column bay	Column logical device	Column information	Column value text	Indication type	Entry in event list	Entry in alarm list	Acknowledge	Display in indication area	Indication class	Entry in SML	Display in diagram	Archive	Operational indications	Protection indications	Command derivation	FP/SC	Command output
75	31	R110	EA08	7UT512	DIF.O:GEN.POPUD	KON	ZAC	22	27	32	39	78	SI	R/C	Y	R/C	Y	1	N	N	R/C	N	Y	Alarm 1 (Hupenbefehl)	N	N
75	81	R110	EA08	7UT512	DIF.O:NADPR.VYP.IMP.L1	KON	ZAC	22	27	32	39	78	SI	R/C	Y	R/C	Y	1	N	N	R/C	N	Y	Alarm 1 (Hupenbefehl)	N	N
75	82	R110	EA08	7UT512	DIF.O:NADPR.VYP.IMP.L2	KON	ZAC	22	27	32	39	78	SI	R/C	Y	R/C	Y	1	N	N	R/C	N	Y	Alarm 1 (Hupenbefehl)	N	N
75	83	R110	EA08	7UT512	DIF.O:NADPR.VYP.IMP.L3	KON	ZAC	22	27	32	39	78	SI	R/C	Y	R/C	Y	1	N	N	R/C	N	Y	Alarm 1 (Hupenbefehl)	N	N
75	84	R110	EA08	7UT512	DIF.O:SKRAT.VYP.IMP.L1	KON	ZAC	22	27	32	39	78	SI	R/C	Y	R/C	Y	1	N	N	R/C	N	Y	Alarm 1 (Hupenbefehl)	N	N
75	85	R110	EA08	7UT512	DIF.O:SKRAT.VYP.IMP.L2	KON	ZAC	22	27	32	39	78	SI	R/C	Y	R/C	Y	1	N	N	R/C	N	Y	Alarm 1 (Hupenbefehl)	N	N
75	86	R110	EA08	7UT512	DIF.O:SKRAT.VYP.IMP.L3	KON	ZAC	22	27	32	39	78	SI	R/C	Y	R/C	Y	1	N	N	R/C	N	Y	Alarm 1 (Hupenbefehl)	N	N
75	91	R110	EA08	7UT512	DIF.O:NADPR.ST.VYP.IMP			22	27	32	39		TR	O	Y	O	Y	1	N	N	R	N	Y	Alarm 1 (Hupenbefehl)	N	N
75	92	R110	EA08	7UT512	DIF.O:SKRAT.ST.VYP.IMP			22	27	32	39		TR	O	Y	O	Y	1	N	N	R	N	Y	Alarm 1 (Hupenbefehl)	N	N
135	81	R110	EA08	7UT512	OCHRANA PRIPRAVENA	KON	ZAC	22	27	32	39	75	SI	R/C	N				N	N	R/C	N	Y		N	N
135	130	R110	EA08	7UT512	BUFER SIGN. PREPLNENY			22	27	32	39	0	TR	O	N				N	N	R	N	Y		N	N
135	131	R110	EA08	7UT512	STRATA SIGN. PRE LSA			22	27	32	39	0	TR	O	N				N	N	R	N	Y		N	N
135	166	R110	EA08	7UT512	PORUCHA V/V JEDN.C.1	KON	ZAC	22	27	32	39	75	SI	R/C	N				N	N	R/C	N	Y		N	N
135	167	R110	EA08	7UT512	PORUCHA V/V JEDN.C.2	KON	ZAC	22	27	32	39	75	SI	R/C	N				N	N	R/C	N	Y		N	N
135	231	R110	EA08	7UT512	PORUCHA V ENERG. SYST.	KON	ZAC	22	27	32	39	78	SI	R/C	Y	R/C	Y	1	N	N	R/C	N	Y	Alarm 1 (Hupenbefehl)	N	N
150	42	R110	EA08	7UT512	BUCHHOLZ VYPNUTIE	KON	ZAC	22	27	0	39	75	SI	R/C	Y	R/C	Y	1	N	N	R/C	N	Y	Alarm 1 (Hupenbefehl)	N	N
150	151	R110	EA08	7UT512	SUM.POSOBENIE OCHR.			22	27	32	39	0	TR	O	Y	O	Y	1	N	N	R	N	Y	Alarm 1 (Hupenbefehl)	N	N
150	152	R110	EA08	7UT512	SUM.ZRUS.POSOB.OCHR.			22	27	32	39	0	TR	O	Y	O	Y	1	N	N	R	N	Y	Alarm 1 (Hupenbefehl)	N	N
150	161	R110	EA08	7UT512	SUM.GEN.VYP.IMPULZ			22	27	32	39	0	TR	O	Y	O	Y	1	N	N	R	N	Y	Alarm 1 (Hupenbefehl)	N	N
167	61	R110	EA08	7UT512	O.PRETAZ.1 VYPNUTA	KON	ZAC	22	27	32	39	75	SI	R/C	N				N	N	R/C	N	Y		N	N
167	62	R110	EA08	7UT512	O.PRETAZ.1 BLOKOV.	KON	ZAC	22	27	32	39	75	SI	R/C	N				N	N	R/C	N	Y		N	N
167	63	R110	EA08	7UT512	O.PRETAZ.1 V CINN.	KON	ZAC	22	27	32	39	75	SI	R/C	N				N	N	R/C	N	Y		N	N
167	65	R110	EA08	7UT512	O.PRETAZ.1 PRUD.VYSTR	KON	ZAC	22	27	32	39	75	SI	R/C	N				N	N	R/C	N	Y		N	N
167	66	R110	EA08	7UT512	O.PRETAZ.1 TEPEL.VYSTR	KON	ZAC	22	27	32	39	75	SI	R/C	N				N	N	R/C	N	Y		N	N
167	71	R110	EA08	7UT512	O.PRETAZ.1 VYP.POVEL	KON	ZAC	22	27	32	39	78	SI	R/C	Y	R/C	Y	1	N	N	R/C	N	Y	Alarm 1 (Hupenbefehl)	N	N
167	111	R110	EA08	7UT512	O.PRETAZ.2 VYPNUTA	KON	ZAC	22	27	32	39	75	SI	R/C	N				N	N	R/C	N	Y		N	N
167	112	R110	EA08	7UT512	O.PRETAZ.2 BLOKOV.	KON	ZAC	22	27	32	39	75	SI	R/C	N				N	N	R/C	N	Y		N	N
167	113	R110	EA08	7UT512	O.PRETAZ.2 V CINN.	KON	ZAC	22	27	32	39	75	SI	R/C	N				N	N	R/C	N	Y		N	N
167	115	R110	EA08	7UT512	O.PRETAZ.2 PRUD.VYSTR	KON	ZAC	22	27	32	39	75	SI	R/C	N				N	N	R/C	N	Y		N	N
167	116	R110	EA08	7UT512	O.PRETAZ.2 TEPEL.VYSTR	KON	ZAC	22	27	32	39	75	SI	R/C	N				N	N	R/C	N	Y		N	N
167	121	R110	EA08	7UT512	O.PRETAZ.2 VYP.POVEL	KON	ZAC	22	27	32	39	78	SI	R/C	Y	R/C	Y	1	N	N	R/C	N	Y	Alarm 1 (Hupenbefehl)	N	N

Documentation structur: Standard
Source file: KO050722.ODA

Date	22.07.2005	VSZ KOSICE	SIEMENS AG ISATOOLS	Substation control system 6MB	T = /BE 51
Drawn	LANG			Numerical protection device:	+
Appr.				Indications	-S104 Page 51
Rev. Remarks	Date	Name Norm	Orig./Repl. 1/Repl. by	Table	

Proprietary data, company confidential. All rights reserved
Confia a tire da secret d'entreprise. Tous droits reserva.
Comunicado como segredo empresarial. Reservados todos os direitos.
Confiado como secreto industrial. Nos reservamos todos los derechos.

The reproduction, transmission or use of this document or its contents is not permitted without express written authority. Offenders will be liable for damages. All rights, including rights created by patent grant or registration of a utility model or design, are reserved.

Station:
Device EA09 7SD502
Device type: 7SD502/503
Function type: 7SD502/503
Manufact.: SIEMENS

Packet number: 3
Version number: 0

Connection Device: EA09 EAG
Subrack: EA09 7SD502
Module:
Comm. processor:
Channel connection
UART: 2
MUX:

Function type	Info number	Section	Bay	Logical device	Lower limit	Value text	Column section	Column bay	Column logical device	Column information	Column value text	Indication type	Entry in event list	Entry in alarm list	Acknowledge	Display in indication area	Indication class	Entry in SML	Display in diagram	Archive	Operational indications	Protection indications	Command derivation	Tel ctrl FP/SC	Command output
	19	R110	EA09	7SD502	NASTAVENIE LED ZOBR.		22	27	32	39	0	TR	O	N				N	N	R	N	Y		N	N
	22	R110	EA09	7SD502	PARAMETRIZACIA OCHRANY	KON ZAC	22	27	32	39	75	SI	R/C	N				N	N	R/C	N	Y		N	N
	23	R110	EA09	7SD502	PARAMETRIZ.AKT.SADA A	KON ZAC	22	27	32	39	75	SI	R/C	N				N	N	R/C	N	Y		N	N
	24	R110	EA09	7SD502	PARAMETRIZ.AKT.SADA B	KON ZAC	22	27	32	39	75	SI	R/C	N				N	N	R/C	N	Y		N	N
	25	R110	EA09	7SD502	PARAMETRIZ.AKT.SADA C	KON ZAC	22	27	32	39	75	SI	R/C	N				N	N	R/C	N	Y		N	N
	26	R110	EA09	7SD502	PARAMETRIZ.AKT.SADA D	KON ZAC	22	27	32	39	75	SI	R/C	N				N	N	R/C	N	Y		N	N
	27	R110	EA09	7SD502	POSOBENIE PLAST.OCHR	KON ZAC	22	27	32	39	75	SI	R/C	N				N	N	R/C	N	Y		N	N
	68	R110	EA09	7SD502	DIF.O: VYP ST.IDIFF>		22	27	32	39		TR	O	Y	O	Y	1	N	N	R	N	Y	Alarm 1 (Hupenbefehl)	N	N
	84	R110	EA09	7SD502	DIF.O:GEN.POPUD	KON ZAC	22	27	32	39	78	SI	R/C	Y	R/C	Y	1	N	N	R/C	N	Y	Alarm 1 (Hupenbefehl)	N	N
51	111	R110	EA09	7SD502	VAZBA JE VYPNUTA	KON ZAC	22	27	32	39	75	SI	R/C	N				N	N	R/C	N	Y		N	N
51	113	R110	EA09	7SD502	VAZBA V CINNOSTI	KON ZAC	22	27	32	39	75	SI	R/C	N				N	N	R/C	N	Y		N	N
51	117	R110	EA09	7SD502	VAZBA VYP. IMPULZ	KON ZAC	22	27	32	39	78	SI	R/C	N				N	N	R/C	N	Y		N	N
62	6	R110	EA09	7SD502	REZ.BLOK.STUP.I>>	KON ZAC	22	27	32	39	75	SI	R/C	N				N	N	R/C	N	Y		N	N
62	7	R110	EA09	7SD502	REZ.BLOK.STUP.I>/Ip	KON ZAC	22	27	32	39	75	SI	R/C	N				N	N	R/C	N	Y		N	N
62	103	R110	EA09	7SD502	REZ. V. CINNOSTI	KON ZAC	22	27	32	39	75	SI	R/C	N				N	N	R/C	N	Y		N	N
62	111	R110	EA09	7SD502	REZ.GEN.POPUD		22	27	32	39		TR	O	Y	O	Y	1	N	N	R	N	Y	Alarm 1 (Hupenbefehl)	N	N
62	121	R110	EA09	7SD502	REZ.POPUD I>>		22	27	32	39		TR	O	Y	O	Y	1	N	N	R	N	Y	Alarm 1 (Hupenbefehl)	N	N
62	122	R110	EA09	7SD502	REZ.POPUD I>/Ip		22	27	32	39		TR	O	Y	O	Y	1	N	N	R	N	Y	Alarm 1 (Hupenbefehl)	N	N
62	141	R110	EA09	7SD502	REZ.SKRAT.CAS		22	27	32	39		TR	O	Y	O	Y	1	N	N	R	N	Y	Alarm 1 (Hupenbefehl)	N	N
62	142	R110	EA09	7SD502	REZ.NADPR.CAS		22	27	32	39		TR	O	Y	O	Y	1	N	N	R	N	Y	Alarm 1 (Hupenbefehl)	N	N
62	151	R110	EA09	7SD502	REZ.GEN.VYP.IMPULZ		22	27	32	39		TR	O	Y	O	Y	1	N	N	R	N	Y	Alarm 1 (Hupenbefehl)	N	N
92	17	R110	EA09	7SD502	DIF.O:V CINNOSTI	KON ZAC	22	27	32	39	75	SI	R/C	N				N	N	R/C	N	Y		N	N
93	11	R110	EA09	7SD502	DIAL.VYPINANIE VYPNUTE	KON ZAC	22	27	32	39	75	SI	R/C	N				N	N	R/C	N	Y		N	N
93	16	R110	EA09	7SD502	DIAL.VYP.IMP.VYSLANY	KON ZAC	22	27	32	39	75	SI	R/C	N				N	N	R/C	N	Y		N	N
93	41	R110	EA09	7SD502	VYP.PROTIST:VYPNUTE	KON ZAC	22	27	32	39	75	SI	R/C	N				N	N	R/C	N	Y		N	N
93	43	R110	EA09	7SD502	VYP.PROTIST.V.CINNOSTI	KON ZAC	22	27	32	39	75	SI	R/C	N				N	N	R/C	N	Y		N	N
93	46	R110	EA09	7SD502	VYP.PROTIS:POPUD	KON ZAC	22	27	32	39	78	SI	R/C	Y	R/C	Y	1	N	N	R/C	N	Y	Alarm 1 (Hupenbefehl)	N	N
93	47	R110	EA09	7SD502	VYP.PROTIS:VYP.IMP	KON ZAC	22	27	32	39	78	SI	R/C	Y	R/C	Y	1	N	N	R/C	N	Y	Alarm 1 (Hupenbefehl)	N	N
93	71	R110	EA09	7SD502	KONTR.PREN.CES.VYPNUTA	KON ZAC	22	27	32	39	75	SI	R/C	N				N	N	R/C	N	Y		N	N
93	76	R110	EA09	7SD502	POR.POM.PRENOS.CESTY	KON ZAC	22	27	32	39	75	SI	R/C	N				N	N	R/C	N	Y		N	N
135	81	R110	EA09	7SD502	OCHRANA PRIPRAVENA	KON ZAC	22	27	32	39	75	SI	R/C	N				N	N	R/C	N	Y		N	N
135	130	R110	EA09	7SD502	BUFER SIGN. PREPLNENY		22	27	32	39	0	TR	O	N				N	N	R	N	Y		N	N

Documentation structur: Standard
Source file: KO050722.ODA

Date	22.07.2005	VSZ KOSICE	SIEMENS AG ISATOOLS
Drawn	LANG		
Appr.			
Norm		Orig./Repl. 1/Repl. by	

Substation control system 6MB
Numerical protection device:
Indications
Table

T = /BE 52
+
-S104
Page

Remarks | Date | Name

Station:

Device EA09 7SD502
Device type: 7SD502/503
Function type: 7SD502/503
Manufact.: SIEMENS

Packet number: 3
Version number: 0

Connection Device: EA09 EAG
Subrack: EA09 7SD502
Module:
Comm. processor:
Channel connection
UART: 2
MUX:

Function type	Info number	Section	Bay	Logical device	Lower limit	Value text	Column section	Column bay	Column logical device	Column information	Column value text	Indication type	Entry in event list	Entry in alarm list	Acknowledge	Display in indication area	Indication class	Entry in SML	Display in diagram	Archive	Operational indications	Protection indications	Command derivation	Tel ctrl FP/SC	Command output
135	131	R110	EA09	7SD502	STRATA SIGN. PRE LSA		22	27	32	39	0	TR	O	N				N	N	R	N	Y		N	N
135	166	R110	EA09	7SD502	PORUCHA V/V JEDN.C.1	KON ZAC	22	27	32	39	75	SI	R/C	N				N	N	R/C	N	Y		N	N
135	170	R110	EA09	7SD502	PORUCHA V/V JEDNOTKY	KON ZAC	22	27	32	39	75	SI	R/C	N				N	N	R/C	N	Y		N	N
135	231	R110	EA09	7SD502	PORUCHA NAPAJ.OCHR.	KON ZAC	22	27	32	39	78	SI	R/C	Y	R/C	Y	1	N	N	R/C	N	Y	Alarm 1 (Hupenbefehl)	N	N
150	152	R110	EA09	7SD502	SUM.ZRUS.POSOB.OCHR.		22	27	32	39	0	TR	O	Y	O	Y	1	N	N	R	N	Y	Alarm 1 (Hupenbefehl)	N	N
150	161	R110	EA09	7SD502	SUM.GEN.VYP.IMPULZ		22	27	32	39	0	TR	O	Y	O	Y	1	N	N	R	N	Y	Alarm 1 (Hupenbefehl)	N	N
167	13	R110	EA09	7SD502	O.PRETAZ:V CINNOSTI	KON ZAC	22	27	32	39	75	SI	R/C	N				N	N	R/C	N	Y		N	N
167	15	R110	EA09	7SD502	O.PRETAZ:PRUD.VYSTR	KON ZAC	22	27	32	39	75	SI	R/C	N				N	N	R/C	N	Y		N	N
167	16	R110	EA09	7SD502	O.PRETAZ:TEPEL.VYSTR.	KON ZAC	22	27	32	39	75	SI	R/C	N				N	N	R/C	N	Y		N	N
167	17	R110	EA09	7SD502	O.PRETAZ:POPUD	KON ZAC	22	27	32	39	75	SI	R/C	N				N	N	R/C	N	Y		N	N
167	21	R110	EA09	7SD502	O.PRETAZ:VYP.POVEL		22	27	32	39		TR	O	Y	O	Y	1	N	N	R	N	Y	Alarm 1 (Hupenbefehl)	N	N

Proprietary data, company confidential. All rights reserved.
Confie a titre de secret d'entreprise. Tous droits r.serv.s.
Comunicado como segredo empresarial. Reservados todos os direitos.
Confiado como secreto industrial. Nos reservamos todos los derechos.

The reproduction, transmission or use of theis document or its is not permitted without expres written authority.
Offenders will be liable for damages. All rights, including rights created by patent grant or registration of a utility model or design, are reserved

Documentation structur: Standard
Source file: KO050722.ODA

Rev.	Remarks	Date	Name	Date	22.07.2005	VSZ KOSICE	SIEMENS AG ISAOOLS	Substation control system 6MB
				Drawn	LANG			Numerical protection device:
				Appr.				Indications
				Norm		Orig./Repl. 1/Repl. by		Table

T = /BE 53
+
-S104
Page 53

Proprietary data, company confidential. All rights reserved
Confia a ntrie de secret dentreprise. Tous droits r serv s.
Comunicado como segredo empresarial. Reservados todos os direitos.
Confiado como secreto industrial. Nos reservamos todos los derechos.
The reproduction, transmission or use of this document or its
is not permitted without expres written authority.
Offenders will be liable for damages. All rights, including rights
created by patent grant or registration of a utility model or design, are reserved

Station:

Device EA09 7SJ511
Device type: 7SJ511
Function type: 7SJ511
Manufact.: SIEMENS

Packet number: 3
Version number: 0

Connection Device: EA09 EAG
Subrack: EA09 7SJ511
Module:
Comm. processor:
Channel connection
UART: 2
MUX:

Function type	Info number	Section	Bay	Logical device	Lower limit	Value text	Column section	Column bay	Column logical device	Column information	Column value text	Indication type	Entry in event list	Entry in alarm list	Acknowledge	Display in indication area	Indication class	Entry in SML	Display in diagram	Archive	Operational indications	Protection indications	Command derivation	Tel ctrl FP/SC	Command output
	19	R110	EA09	7SJ511	NASTAVENIE LED ZOBR.		22	27	32	39	0	TR	O	N				N	N	R	N	Y		N	N
	22	R110	EA09	7SJ511	PARAMETRIZACIA OCHRANY	KON ZAC	22	27	32	39	75	SI	R/C	N				N	N	R/C	N	Y		N	N
	27	R110	EA09	7SJ511	ANWENDERDEF. MELDUNG 1	KON ZAC	22	27	32	39	75	SI	N	N				N	N	N				N	N
	84	R110	EA09	7SJ511	NADPR.OCHR.GEN.POPUD	KON ZAC	22	27	32	39	78	SI	R/C	Y	R/C	Y	1	N	N	R/C	N	Y	Alarm 1 (Hupenbefehl)	N	N
	90	R110	EA09	7SJ511	NADPR.OCHR.VYP.IMP		22	27	32	39		TR	O	Y	O	Y	1	N	N	R	N	Y	Alarm 1 (Hupenbefehl)	N	N
	91	R110	EA09	7SJ511	SKRAT.OCHR.VYP.IMP.		22	27	32	39		TR	O	Y	O	Y	1	N	N	R	N	Y	Alarm 1 (Hupenbefehl)	N	N
60	1	R110	EA09	7SJ511	NADPR.OCHR.BLOK.I>>	KON ZAC	22	27	32	39	75	SI	R/C	N				N	N	R/C	N	Y		N	N
60	2	R110	EA09	7SJ511	NADPR.OCHR.BLOK.I>	KON ZAC	22	27	32	39	75	SI	R/C	N				N	N	R/C	N	Y		N	N
60	46	R110	EA09	7SJ511	SKRAT.OCHR.POPUD L1	KON ZAC	22	27	32	39	78	SI	R/C	Y	R/C	Y	1	N	N	R/C	N	Y	Alarm 1 (Hupenbefehl)	N	N
60	47	R110	EA09	7SJ511	SKRAT.OCHR.POPUD L2	KON ZAC	22	27	32	39	78	SI	R/C	Y	R/C	Y	1	N	N	R/C	N	Y	Alarm 1 (Hupenbefehl)	N	N
60	48	R110	EA09	7SJ511	SKRAT.OCHR.POPUD L3	KON ZAC	22	27	32	39	78	SI	R/C	Y	R/C	Y	1	N	N	R/C	N	Y	Alarm 1 (Hupenbefehl)	N	N
60	49	R110	EA09	7SJ511	SKRAT.OCHR.CAS		22	27	32	39		TR	O	Y	O	Y	1	N	N	R	N	Y	Alarm 1 (Hupenbefehl)	N	N
60	50	R110	EA09	7SJ511	NADPR.OCHR.POPUD L1	KON ZAC	22	27	32	39	78	SI	R/C	Y	R/C	Y	1	N	N	R/C	N	Y	Alarm 1 (Hupenbefehl)	N	N
60	51	R110	EA09	7SJ511	NADPR.OCHR.POPUD L2	KON ZAC	22	27	32	39	78	SI	R/C	Y	R/C	Y	1	N	N	R/C	N	Y	Alarm 1 (Hupenbefehl)	N	N
60	52	R110	EA09	7SJ511	NADPR.OCHR.POPUD L3	KON ZAC	22	27	32	39	78	SI	R/C	Y	R/C	Y	1	N	N	R/C	N	Y	Alarm 1 (Hupenbefehl)	N	N
60	53	R110	EA09	7SJ511	NADPR.OCHR.CAS		22	27	32	39		TR	O	Y	O	Y	1	N	N	R	N	Y	Alarm 1 (Hupenbefehl)	N	N
135	81	R110	EA09	7SJ511	OCHRANA PRIPRAVENA	KON ZAC	22	27	32	39	75	SI	R/C	N				N	N	R/C	N	Y		N	N
135	130	R110	EA09	7SJ511	BUFER SIGN. PREPLNENY		22	27	32	39	0	TR	O	N				N	N	R	N	Y		N	N
135	131	R110	EA09	7SJ511	STRATA SIGN. PRE LSA		22	27	32	39	0	TR	O	N				N	N	R	N	Y		N	N
135	231	R110	EA09	7SJ511	PORUCHA NAPAJ.OCHR.	KON ZAC	22	27	32	39	78	SI	R/C	Y	R/C	Y	1	N	N	R/C	N	Y	Alarm 1 (Hupenbefehl)	N	N
150	151	R110	EA09	7SJ511	SUM.POSOBENIE OCHR.		22	27	32	39	0	TR	O	Y	O	Y	1	N	N	R	N	Y	Alarm 1 (Hupenbefehl)	N	N
150	152	R110	EA09	7SJ511	SUM.ZRUS.POSOB.OCHR.		22	27	32	39	0	TR	O	Y	O	Y	1	N	N	R	N	Y	Alarm 1 (Hupenbefehl)	N	N
150	161	R110	EA09	7SJ511	SUM.GEN.VYP.IMPULZ		22	27	32	39	0	TR	O	Y	O	Y	1	N	N	R	N	Y	Alarm 1 (Hupenbefehl)	N	N
150	171	R110	EA09	7SJ511	VYPIN.PRUD. L1 I/In=		22	27	32	39	0	NV	O	Y	O	Y	1	N	N	R	N	Y	Alarm 1 (Hupenbefehl)	N	N
150	172	R110	EA09	7SJ511	VYPIN.PRUD. L2 I/In=		22	27	32	39	0	NV	O	Y	O	Y	1	N	N	R	N	Y	Alarm 1 (Hupenbefehl)	N	N
150	173	R110	EA09	7SJ511	VYPIN.PRUD. L3 I/In=		22	27	32	39	0	NV	O	Y	O	Y	1	N	N	R	N	Y	Alarm 1 (Hupenbefehl)	N	N
167	11	R110	EA09	7SJ511	O.PRETAZ. VYPNUTA	KON ZAC	22	27	32	39	78	SI	N	N				N	N	N				N	N
167	12	R110	EA09	7SJ511	O.PRETAZ. BLOKOVANA	KON ZAC	22	27	32	39	78	SI	N	N				N	N	N				N	N
167	15	R110	EA09	7SJ511	O.PRETAZ:PRUD.VYSTR	KON ZAC	22	27	32	39	78	SI	N	N				N	N	N				N	N
167	16	R110	EA09	7SJ511	O.PRETAZ. TEPEL.VYSTR	KON ZAC	22	27	32	39	78	SI	N	N				N	N	N				N	N
167	21	R110	EA09	7SJ511	O.PRETAZ. VYP.POVEL		22	27	32	39		SI	N	N				N	N	N				N	N

Documentation structur: Standard
Source file: K0050722.ODA

Date	22.07.2005	VSZ KOSICE	SIEMENS AG ISATOOLS
Drawn	LANG		
Appr.			
Norm		Orig./Repl. 1/Repl. by	

Substation control system 6MB
Numerical protection device:
Indications
Table

T = /BE 54
+
-S104
Page

Remarks | Date | Name

Proprietary data, company confidential. All rights reserved
Confiança da secret d'entreprise. Tous droits servis
Considerado como segredo empresarial. Reservados todos os direitos
Confiado como secreto industrial. Nos reservamos todos los derechos.
The reproduction, transmission or use of this document or its
is not permitted without expires written authority.
Offenders will be liable for damages. All rights, including rights
created by patent grant or registration of a utility model or design, are reserved.

Station:
Device EA10 7SJ512
Device type: 7SJ512
Function type: 7SJ512
Manufact.: SIEMENS

Packet number: 3
Version number: 0

Connection Device: EA10 EAG
Subrack: EA10 7SJ512
Module:
Comm. processor:
Channel connection
UART: 2
MUX:

Function type	Info number	Section	Bay	Logical device	Lower limit	Value text	Column section	Column bay	Column logical device	Column information	Column value text	Indication type	Entry in event list	Entry in alarm list	Acknowledge	Display in indication area	Indication class	Entry in SML	Display in diagram	Archive	Operational indications	Protection indications
	19	R110	EA10	7SJ512	NASTAVENIE LED ZOBR.		22	27	32	39	0	TR	O	N				N	N	R	N	Y
	22	R110	EA10	7SJ512	PARAMETRIZACIA OCHRANY	KON ZAC	22	27	32	39	75	SI	R/C	N				N	N	R/C	N	Y
	27	R110	EA10	7SJ512	ANWENDERDEF. MELDUNG 1	KON ZAC	22	27	0	39	75	SI	N	N				N	N	N		
	28	R110	EA10	7SJ512	ANWENDERDEF. MELDUNG 2	KON ZAC	22	27	32	39	75	SI	N	N				N	N	N		
	29	R110	EA10	7SJ512	ANWENDERDEF. MELDUNG 3	KON ZAC	22	27	32	39	75	SI	N	N				N	N	N		
	30	R110	EA10	7SJ512	ANWENDERDEF. MELDUNG 4	KON ZAC	22	27	32	39	75	SI	N	N				N	N	N		
	32	R110	EA10	7SJ512	PORUCHA MER. PRUDU	KON ZAC	22	27	32	39	75	SI	R/C	N				N	N	R/C	N	Y
	33	R110	EA10	7SJ512	PORUCHA MER.NAPATIA	KON ZAC	22	27	32	39	75	SI	R/C	N				N	N	R/C	N	Y
	36	R110	EA10	7SJ512	KONTROLA VYST.JEDN.	KON ZAC	22	27	32	39	75	SI	R/C	N				N	N	R/C	N	Y
	48	R110	EA10	7SJ512	ZEMNE SPOJENIE V L1	KON ZAC	22	27	32	39	75	SI	N	N				N	N	N		
	49	R110	EA10	7SJ512	ZEMNE SPOJENIE V L2	KON ZAC	22	27	32	39	75	SI	N	N				N	N	N		
	50	R110	EA10	7SJ512	ZEMNE SPOJENIE V L3	KON ZAC	22	27	32	39	75	SI	N	N				N	N	N		
	68	R110	EA10	7SJ512	NADPR.O.GEN.VYP.IMP		22	27	32	39		TR	O	Y	O	Y	1	N	N	R	N	Y
	74	R110	EA10	7SJ512	SUM.VYP.IMP.VPRED		22	27	32	39		TR	O	Y	O	Y	1	N	N	R	N	Y
	75	R110	EA10	7SJ512	SUM.VYP.IMP.VZAD		22	27	32	39		TR	O	Y	O	Y	1	N	N	R	N	Y
	84	R110	EA10	7SJ512	NADPR.OCHR.GEN.POPUD	KON ZAC	22	27	32	39	78	SI	R/C	Y	R/C	Y	1	N	N	R/C	N	Y
	90	R110	EA10	7SJ512	NADPR.OCHR.VYP.IMP2		22	27	32	39		TR	O	N				N	N	N		
	91	R110	EA10	7SJ512	SKRAT.OCHR.VYP.IMP.		22	27	32	39		TR	O	Y	O	Y	1	N	N	R	N	Y
60	46	R110	EA10	7SJ512	SKRAT.OCHR.POPUD L1	KON ZAC	22	27	32	39	78	SI	R/C	Y	R/C	Y	1	N	N	R/C	N	Y
60	47	R110	EA10	7SJ512	SKRAT.OCHR.POPUD L2	KON ZAC	22	27	32	39	78	SI	R/C	Y	R/C	Y	1	N	N	R/C	N	Y
60	48	R110	EA10	7SJ512	SKRAT.OCHR.POPUD L3	KON ZAC	22	27	32	39	78	SI	R/C	Y	R/C	Y	1	N	N	R/C	N	Y
60	49	R110	EA10	7SJ512	SKRAT.OCHR.CAS		22	27	32	39		TR	O	Y	O	Y	1	N	N	R	N	Y
60	50	R110	EA10	7SJ512	NADPR.OCHR.POPUD L1	KON ZAC	22	27	32	39	78	SI	R/C	Y	R/C	Y	1	N	N	R/C	N	Y
60	51	R110	EA10	7SJ512	NADPR.OCHR.POPUD L2	KON ZAC	22	27	32	39	78	SI	R/C	Y	R/C	Y	1	N	N	R/C	N	Y
60	52	R110	EA10	7SJ512	NADPR.OCHR.POPUD L3	KON ZAC	22	27	32	39	78	SI	R/C	Y	R/C	Y	1	N	N	N		
60	53	R110	EA10	7SJ512	NADPR.OCHR.CAS		22	27	32	39		TR	O	Y	O	Y	1	N	N	R	N	Y
63	21	R110	EA10	7SJ512	NADPR.SMER.POPUD L1	KON ZAC	22	27	32	39	78	SI	R/C	Y	R/C	Y	1	N	N	R/C	N	Y
63	22	R110	EA10	7SJ512	NADPR.SMER.POPUD L2	KON ZAC	22	27	32	39	78	SI	R/C	Y	R/C	Y	1	N	N	R/C	N	Y
63	23	R110	EA10	7SJ512	NADPR.SMER.POPUD L3	KON ZAC	22	27	32	39	78	SI	R/C	Y	R/C	Y	1	N	N	R/C	N	Y
63	24	R110	EA10	7SJ512	NADPR.SMER.OCHR.CAS		22	27	32	39		TR	O	Y	O	Y	1	N	N	R	N	Y
135	81	R110	EA10	7SJ512	OCHRANA PRIPRAVENA	KON ZAC	22	27	32	39	75	SI	R/C	N				N	N	R/C	N	Y
135	130	R110	EA10	7SJ512	BUFER SIGN. PREPLNENY		22	27	32	39	0	TR	O	N				N	N	R	N	Y

Documentation structur: Standard
Source file: KO050722.ODA

Rev.	Remarks	Date	Name	Norm	Date 22.07.2005	Drawn LANG	Appr.	Orig./Repl. 1/Repl. by

VSZ KOSICE

SIEMENS AG
ISATOOLS

Substation control system 6MB
Numerical protection device:
Indications
Table

T = /BE 55
+
-S104
Page 55

Station:
Device EA10 7SJ512
Device type: 7SJ512
Function type: 7SJ512
Manufact.: SIEMENS

Packet number: 3
Version number: 0

Connection Device: EA10 EAG
Subrack: EA10 7SJ512
Module:
Comm. processor:
Channel connection
UART: 2
MUX:

Function type	Info number	Command derivation	Indication derivation	FP/SC	Tel ctrl Command output
	19			N	N
	22			N	N
	27		7SJ512 OCHRANA NADOBY VYPNUTI	N	N
	28		KA4 NADRP.OCHR.POSOBENIE	N	N
	29		LA309 NADRP.OCHR.POSOBENIE	N	N
	30			N	N
	32			N	N
	33			N	N
	36			N	N
	48			N	N
	49			N	N
	50			N	N
	68	Alarm 1 (Hupenbefehl)		N	N
	74	Alarm 1 (Hupenbefehl)		N	N
	75	Alarm 1 (Hupenbefehl)		N	N
	84	Alarm 1 (Hupenbefehl)		N	N
	90			N	N
	91	Alarm 1 (Hupenbefehl)		N	N
60	46	Alarm 1 (Hupenbefehl)		N	N
60	47	Alarm 1 (Hupenbefehl)		N	N
60	48	Alarm 1 (Hupenbefehl)		N	N
60	49	Alarm 1 (Hupenbefehl)		N	N
60	50	Alarm 1 (Hupenbefehl)		N	N
60	51	Alarm 1 (Hupenbefehl)		N	N
60	52	Alarm 1 (Hupenbefehl)		N	N
60	53	Alarm 1 (Hupenbefehl)		N	N
63	21	Alarm 1 (Hupenbefehl)		N	N
63	22	Alarm 1 (Hupenbefehl)		N	N
63	23	Alarm 1 (Hupenbefehl)		N	N
63	24	Alarm 1 (Hupenbefehl)		N	N
135	81			N	N
135	130			N	N

Proprietary data, company confidential. All rights reserved
Confia a tire de secret d'entreprise. Tous droits r.serv.s.
Comunicado como segredo empressarial. Reservados todos os direitos.
Confiado como secreto industrial. Nos reservamos todos los derechos.
The reproduction, transmission or use of this document or its is not permited without expres written authority.
Offenders will be liable for damages. All rights, including rights created by patent grant or registration of a utility model or design, are reserved.

Documentation structur: Standard
Source file: KO050722.ODA

			Date	22.07.2005	VSZ KOSICE
			Drawn	LANG	
			Appr.		
R	Remarks	Date	Name	Norm	Orig./Repl. 1/Repl. by

SIEMENS AG
ISAOOLS

Substation control system 6MB
Numerical protection device:
Indications
Table

T = /BE 56
+

-S104

Page

Station:
Device EA10 7SJ512
Device type: 7SJ512
Function type: 7SJ512
Manufact.: SIEMENS

Packet number: 3
Version number: 0

Connection Device: EA10 EAG
Subrack: EA10 7SJ512
Module:
Comm. processor:
Channel connection
UART: 2
MUX:

Function type	Info number	Section	Bay	Logical device	Lower limit	Value text	Column section	Column bay	Column logical device	Column information	Column value text	Indication type	Entry in event list	Entry in alarm list	Acknowledge	Display in indication area	Indication class	Entry in SML	Display in diagram	Archive	Operational indications	Protection indications
135	131	R110	EA10	7SJ512	STRATA SIGN. PRE LSA		22	27	32	39	0	TR	O	N				N	N	R	N	Y
135	170	R110	EA10	7SJ512	PORUCHA V/V JEDNOTKY	KON ZAC	22	27	32	39	75	SI	R/C	N				N	N	R/C	N	Y
135	231	R110	EA10	7SJ512	PORUCHA NAPAJ.OCHR.	KON ZAC	22	27	32	39	78	SI	R/C	Y	R/C	Y	1	N	N	R/C	N	Y
150	151	R110	EA10	7SJ512	SUM.POSOBENIE OCHR.		22	27	32	39	0	TR	O	Y	O	Y	1	N	N	R	N	Y
150	152	R110	EA10	7SJ512	SUM.ZRUS.POSOB.OCHR.		22	27	32	39	0	TR	O	Y	O	Y	1	N	N	R	N	Y
150	161	R110	EA10	7SJ512	SUM.GEN.VYP.IMPULZ		22	27	32	39	0	TR	O	Y	O	Y	1	N	N	R	N	Y
150	171	R110	EA10	7SJ512	VYPIN.PRUD. L1 I/In=		22	27	32	39	0	NV	O	Y	O	Y	1	N	N	R	N	Y
150	172	R110	EA10	7SJ512	VYPIN.PRUD. L2 I/In=		22	27	32	39	0	NV	O	Y	O	Y	1	N	N	R	N	Y
150	173	R110	EA10	7SJ512	VYPIN.PRUD. L3 I/In=		22	27	32	39	0	NV	O	Y	O	Y	1	N	N	R	N	Y
167	11	R110	EA10	7SJ512	O.PRETAZ. VYPNUTA	KON ZAC	22	27	32	39	75	SI	R/C	N				N	N	R/C	N	Y
167	12	R110	EA10	7SJ512	O.PRETAZ. BLOKOV.	KON ZAC	22	27	32	39	75	SI	R/C	N				N	N	R/C	N	Y
167	13	R110	EA10	7SJ512	O.PRETAZ. V CINNOSTI	KON ZAC	22	27	32	39	75	SI	R/C	N				N	N	R/C	N	Y
167	15	R110	EA10	7SJ512	O.PRETAZ. PRUD.VYSTR	KON ZAC	22	27	32	39	75	SI	R/C	N				N	N	R/C	N	Y
167	16	R110	EA10	7SJ512	O.PRETAZ. TEPEL.VYSTR	KON ZAC	22	27	32	39	75	SI	R/C	N				N	N	R/C	N	Y
167	21	R110	EA10	7SJ512	O.PRETAZ. VYP.POVEL		22	27	32	39		TR	O	N				N	N	R	N	Y

Proprietary data, company confidential. All rights reserved
Confie a titre de secret d'entreprise. Tous droits réservés.
Comunicado como segredo empresarial. Reservados todos os direitos.
Confiado como secreto industrial. Nos reservamos todos los derechos.
The reproduction, transmission or use of this document or its is not permitted without express written authority.
Offenders will be liable for damages. All rights, including rights created by patent grant or registration of a utility model or design, are reserved

Documentation structur: Standard
Source file: KO050722.ODA

Rev.	Remarks	Date	Name	Date	22.07.2005	VSZ KOSICE	SIEMENS AG ISAOOLS	Substation control system 6MB
				Drawn	LANG			Numerical protection device:
				Appr.				Indications
				Norm		Orig./Repl. 1/Repl. by		Table

T = /BE 57
+
-S104

Station:

Device EA10 7SJ512
Device type: 7SJ512
Function type: 7SJ512
Manufact.: SIEMENS

Packet number: 3
Version number: 0

Connection Device: EA10 EAG
Subrack: EA10 7SJ512
Module:
Comm. processor:
Channel connection
UART: 2
MUX:

Function type	Info number	Command derivation	Indication derivation	Tel ctrl FP/SC	Command output
135	131			N	N
135	170			N	N
135	231	Alarm 1 (Hupenbefehl)		N	N
150	151	Alarm 1 (Hupenbefehl)		N	N
150	152	Alarm 1 (Hupenbefehl)		N	N
150	161	Alarm 1 (Hupenbefehl)		N	N
150	171	Alarm 1 (Hupenbefehl)		N	N
150	172	Alarm 1 (Hupenbefehl)		N	N
150	173	Alarm 1 (Hupenbefehl)		N	N
167	11			N	N
167	12			N	N
167	13			N	N
167	15			N	N
167	16			N	N
167	21			N	N

Proprietary data, company confidential. All rights reserved.
Confie a titre de secret d'entreprise. Tous droits reservs.
Comunicado como segredo empresarial. Reservados todos os direitos.
Confiado como secreto industrial. Nos reservamos todos los derechos.

The reproduction, transmission or use of this document or its is not permitted without express written authority. Offenders will be liable for damages. All rights, including rights created by patent grant or registration of a utility model or design, are reserved.

Documentation structur: Standard
Source file: KO050722.ODA

			Date	22.07.2005	VSZ KOSICE
			Drawn	LANG	
			Appr.		
R	Remarks	Date	Name	Norm	Orig./Repl. 1/Repl. by

SIEMENS AG
ISA TOOLS

Substation control system 6MB
Numerical protection device:
Indications
Table

T = /BE 58
+
-S104
Page

Station:

Device EA10 7UT512
Device type: 7UT51
Function type: 7UT51
Manufact.: SIEMENS

Packet number: 3
Version number: 0

Connection Device: EA10 EAG
Subrack: EA10 7UT512
Module:
Comm. processor:
Channel connection
UART: 2
MUX:

Function type	Info number	Section	Bay	Logical device	Lower limit	Value text	Column section	Column bay	Column logical device	Column information	Column value text	Indication type	Entry in event list	Entry in alarm list	Acknowledge	Display in indication area	Indication class	Entry in SML	Display in diagram	Archive	Operational indications	Protection indications	Command derivation	Tel ctrl FP/SC	Command output
	19	R110	EA10	7UT513	NASTAVENIE LED ZOBR.		22	27	32	39	0	TR	O	N				N	N	R	N	Y		N	N
	22	R110	EA10	7UT513	PARAMETRIZACIA OCHRANY	KON ZAC	22	27	32	39	75	SI	R/C	N				N	N	R/C	N	Y		N	N
	23	R110	EA10	7UT513	PARAMETRIZ.AKT.SADA A	KON ZAC	22	27	32	39	75	SI	R/C	N				N	N	R/C	N	Y		N	N
	24	R110	EA10	7UT513	PARAMETRIZ.AKT.SADA B	KON ZAC	22	27	32	39	75	SI	R/C	N				N	N	R/C	N	Y		N	N
	25	R110	EA10	7UT513	PARAMETRIZ.AKT.SADA C	KON ZAC	22	27	32	39	75	SI	R/C	N				N	N	R/C	N	Y		N	N
	26	R110	EA10	7UT513	PARAMETRIZ.AKT.SADA D	KON ZAC	22	27	32	39	75	SI	R/C	N				N	N	R/C	N	Y		N	N
	27	R110	EA10	7UT513	OCHRANA NADOBY VYPNUTIE	KON ZAC	22	27	0	39	75	SI	R/C	Y	R/C	Y	1	N	N	R/C	N	Y	Alarm 1 (Hupenbefehl)	N	N
	68	R110	EA10	7UT513	DIF.O:VYP.IMPULZ		22	27	32	39		TR	O	Y	O	Y	1	N	N	R	N	Y	Alarm 1 (Hupenbefehl)	N	N
	86	R110	EA10	7UT513	DIF.O:VYP.IMP.L1		22	27	32	39		TR	O	Y	O	Y	1	N	N	R	N	Y	Alarm 1 (Hupenbefehl)	N	N
	87	R110	EA10	7UT513	DIF.O:VYP.IMP.L2		22	27	32	39		TR	O	Y	O	Y	1	N	N	R	N	Y	Alarm 1 (Hupenbefehl)	N	N
	88	R110	EA10	7UT513	DIF.O:VYP.IMP.L3		22	27	32	39		TR	O	Y	O	Y	1	N	N	R	N	Y	Alarm 1 (Hupenbefehl)	N	N
51	131	R110	EA10	7UT513	VAZBA 1 JE VYPNUTA	KON ZAC	22	27	32	39	75	SI	R/C	N				N	N	R/C	N	Y		N	N
51	133	R110	EA10	7UT513	VAZBA 1 V CINNOSTI	KON ZAC	22	27	32	39	75	SI	R/C	N				N	N	R/C	N	Y		N	N
51	136	R110	EA10	7UT513	VAZBA 1 POPUD	KON ZAC	22	27	32	39	78	SI	R/C	Y	R/C	Y	1	N	N	R/C	N	Y	Alarm 1 (Hupenbefehl)	N	N
51	137	R110	EA10	7UT513	VAZBA 1 VYP.IMPULZ		22	27	32	39		TR	O	Y	O	Y	1	N	N	R	N	Y	Alarm 1 (Hupenbefehl)	N	N
62	101	R110	EA10	7UT513	REZ.NADPR.O.VYPNUTA	KON ZAC	22	27	32	39	75	SI	R/C	N				N	N	R/C	N	Y		N	N
62	102	R110	EA10	7UT513	REZ.NADPR.O.BLOKOV.	KON ZAC	22	27	32	39	75	SI	R/C	N				N	N	R/C	N	Y		N	N
62	103	R110	EA10	7UT513	REZ.NADPR.O. V CINN.	KON ZAC	22	27	32	39	75	SI	R/C	N				N	N	R/C	N	Y		N	N
62	111	R110	EA10	7UT513	REZ.GEN.POPUD		22	27	32	39		TR	O	Y	O	Y	1	N	N	R	N	Y	Alarm 1 (Hupenbefehl)	N	N
62	112	R110	EA10	7UT513	REZ.POPUD V L1	KON ZAC	22	27	32	39	78	SI	R/C	Y	R/C	Y	1	N	N	R/C	N	Y	Alarm 1 (Hupenbefehl)	N	N
62	113	R110	EA10	7UT513	REZ.POPUD V L2	KON ZAC	22	27	32	39	78	SI	R/C	Y	R/C	Y	1	N	N	R/C	N	Y	Alarm 1 (Hupenbefehl)	N	N
62	114	R110	EA10	7UT513	REZ.POPUD V L3	KON ZAC	22	27	32	39	78	SI	R/C	Y	R/C	Y	1	N	N	R/C	N	Y	Alarm 1 (Hupenbefehl)	N	N
62	121	R110	EA10	7UT513	REZ.POPUD SKRAT.ST.		22	27	32	39		TR	O	Y	O	Y	1	N	N	R	N	Y	Alarm 1 (Hupenbefehl)	N	N
62	122	R110	EA10	7UT513	REZ.POPUD NADPR.ST.		22	27	32	39		TR	O	Y	O	Y	1	N	N	R	N	Y	Alarm 1 (Hupenbefehl)	N	N
62	141	R110	EA10	7UT513	REZ.SKRAT.O.CAS		22	27	32	39		TR	O	Y	O	Y	1	N	N	R	N	Y	Alarm 1 (Hupenbefehl)	N	N
62	142	R110	EA10	7UT513	REZ.NADPR.O.CAS		22	27	32	39		TR	O	Y	O	Y	1	N	N	R	N	Y	Alarm 1 (Hupenbefehl)	N	N
62	151	R110	EA10	7UT513	REZ.GEN.VYP.IMPULZ		22	27	32	39		TR	O	Y	O	Y	1	N	N	R	N	Y	Alarm 1 (Hupenbefehl)	N	N
75	15	R110	EA10	7UT513	DIF.O:VYPNUTA	KON ZAC	22	27	32	39	75	SI	R/C	N				N	N	R/C	N	Y		N	N
75	16	R110	EA10	7UT513	DIF.O:BLOKOVANA	KON ZAC	22	27	32	39	75	SI	R/C	N				N	N	R/C	N	Y		N	N
75	17	R110	EA10	7UT513	DIF.O:V CINNOSTI	KON ZAC	22	27	32	39	75	SI	R/C	N				N	N	R/C	N	Y		N	N
75	21	R110	EA10	7UT513	DIF.O: ONESK.IDIFF>		22	27	32	39		TR	O	Y	O	Y	1	N	N	R	N	Y	Alarm 1 (Hupenbefehl)	N	N
75	22	R110	EA10	7UT513	DIF.O: ONESK.IDIFF>>		22	27	32	39		TR	O	Y	O	Y	1	N	N	R	N	Y	Alarm 1 (Hupenbefehl)	N	N

Proprietary data, company confidential. All rights reserved.
Confiée à titre de secret d'entreprise. Tous droits réservés.
Comunicado como segredo empresarial. Reservados todos os direitos.
Confiado como secreto industrial. Nos reservamos todos los derechos.
The reproduction, transmission or use of this document or its contents is not permitted without express written authority. Offenders will be liable for damages. All rights, including rights created by patent grant or registration of a utility model or design, are reserved.

Documentation structure: Standard
Source file: KO050722.ODA

Date	22.07.2005	VSZ KOSICE	SIEMENS AG ISAOOLS	Substation control system 6MB Numerical protection device: Indications Table	T = /BE 59
Drawn	LANG				+
Appr.					-S104 Page 59
Rev. / Remarks / Date / Name Norm		Orig./Repl. 1/Repl. by			

Station:
Device EA10 7UT512
Device type: 7UT51
Function type: 7UT51
Manufact.: SIEMENS

Packet number: 3
Version number: 0

Connection Device: EA10 EAG
Subrack: EA10 7UT512
Module:
Comm. processor:
Channel connection
UART: 2
MUX:

Function type	Info number	Section	Bay	Logical device	Lower limit	Value text		Column section	Column bay	Column logical device	Column information	Column value text	Indication type	Entry in event list	Entry in alarm list	Acknowledge	Display in indication area	Indication class	Entry in SML	Display in diagram	Archive	Operational indications	Protection indications	Command derivation	Tel ctrl FP/SC	Command output
75	31	R110	EA10	7UT513	DIF.O:GEN.POPUD	KON	ZAC	22	27	32	39	78	SI	R/C	Y	R/C	Y	1	N	N	R/C	N	Y	Alarm 1 (Hupenbefehl)	N	N
75	81	R110	EA10	7UT513	DIF.O:NADPR.VYP.IMP.L1	KON	ZAC	22	27	32	39	78	SI	R/C	Y	R/C	Y	1	N	N	R/C	N	Y	Alarm 1 (Hupenbefehl)	N	N
75	82	R110	EA10	7UT513	DIF.O:NADPR.VYP.IMP.L2	KON	ZAC	22	27	32	39	78	SI	R/C	Y	R/C	Y	1	N	N	R/C	N	Y	Alarm 1 (Hupenbefehl)	N	N
75	83	R110	EA10	7UT513	DIF.O:NADPR.VYP.IMP.L3	KON	ZAC	22	27	32	39	78	SI	R/C	Y	R/C	Y	1	N	N	R/C	N	Y	Alarm 1 (Hupenbefehl)	N	N
75	84	R110	EA10	7UT513	DIF.O:SKRAT.VYP.IMP.L1	KON	ZAC	22	27	32	39	78	SI	R/C	Y	R/C	Y	1	N	N	R/C	N	Y	Alarm 1 (Hupenbefehl)	N	N
75	85	R110	EA10	7UT513	DIF.O:SKRAT.VYP.IMP.L2	KON	ZAC	22	27	32	39	78	SI	R/C	Y	R/C	Y	1	N	N	R/C	N	Y	Alarm 1 (Hupenbefehl)	N	N
75	86	R110	EA10	7UT513	DIF.O:SKRAT.VYP.IMP.L3	KON	ZAC	22	27	32	39	78	SI	R/C	Y	R/C	Y	1	N	N	R/C	N	Y	Alarm 1 (Hupenbefehl)	N	N
75	91	R110	EA10	7UT513	DIF.O:NADPR.ST.VYP.IMP			22	27	32	39		TR	O	Y	O	Y	1	N	N	R	N	Y	Alarm 1 (Hupenbefehl)	N	N
75	92	R110	EA10	7UT513	DIF.O:SKRAT.ST.VYP.IMP			22	27	32	39		TR	O	Y	O	Y	1	N	N	R	N	Y	Alarm 1 (Hupenbefehl)	N	N
135	81	R110	EA10	7UT513	OCHRANA PRIPRAVENA	KON	ZAC	22	27	32	39	75	SI	R/C	N				N	N	R/C	N	Y		N	N
135	130	R110	EA10	7UT513	BUFER SIGN. PREPLNENY			22	27	32	39	0	TR	O	N				N	N	R	N	Y		N	N
135	131	R110	EA10	7UT513	STRATA SIGN. PRE LSA			22	27	32	39	0	TR	O	N				N	N	R	N	Y		N	N
135	166	R110	EA10	7UT513	PORUCHA V/V JEDN.C.1	KON	ZAC	22	27	32	39	75	SI	R/C	N				N	N	R/C	N	Y		N	N
135	167	R110	EA10	7UT513	PORUCHA V/V JEDN.C.2	KON	ZAC	22	27	32	39	75	SI	R/C	N				N	N	R/C	N	Y		N	N
135	231	R110	EA10	7UT513	PORUCHA V ENERG. SYST.	KON	ZAC	22	27	32	39	78	SI	R/C	Y	R/C	Y	1	N	N	R/C	N	Y	Alarm 1 (Hupenbefehl)	N	N
150	42	R110	EA10	7UT513	BUCHHOLZ VYPNUTIE	KON	ZAC	22	27	0	39	75	SI	R/C	Y	R/C	Y	1	N	N	R/C	N	Y	Alarm 1 (Hupenbefehl)	N	N
150	151	R110	EA10	7UT513	SUM.POSOBENIE OCHR.			22	27	32	39	0	TR	O	Y	O	Y	1	N	N	R	N	Y	Alarm 1 (Hupenbefehl)	N	N
150	152	R110	EA10	7UT513	SUM.ZRUS.POSOB.OCHR.			22	27	32	39	0	TR	O	Y	O	Y	1	N	N	R	N	Y	Alarm 1 (Hupenbefehl)	N	N
150	161	R110	EA10	7UT513	SUM.GEN.VYP.IMPULZ			22	27	32	39	0	TR	O	Y	O	Y	1	N	N	R	N	Y	Alarm 1 (Hupenbefehl)	N	N
167	61	R110	EA10	7UT513	O.PRETAZ.1 VYPNUTA	KON	ZAC	22	27	32	39	75	SI	R/C	N				N	N	R/C	N	Y		N	N
167	62	R110	EA10	7UT513	O.PRETAZ.1 BLOKOV.	KON	ZAC	22	27	32	39	75	SI	R/C	N				N	N	R/C	N	Y		N	N
167	63	R110	EA10	7UT513	O.PRETAZ.1 V CINN.	KON	ZAC	22	27	32	39	75	SI	R/C	N				N	N	R/C	N	Y		N	N
167	65	R110	EA10	7UT513	O.PRETAZ.1 PRUD.VYSTR	KON	ZAC	22	27	32	39	75	SI	R/C	N				N	N	R/C	N	Y		N	N
167	66	R110	EA10	7UT513	O.PRETAZ.1 TEPEL.VYSTR	KON	ZAC	22	27	32	39	75	SI	R/C	N				N	N	R/C	N	Y		N	N
167	71	R110	EA10	7UT513	O.PRETAZ.1 VYP.POVEL	KON	ZAC	22	27	32	39	78	SI	R/C	Y	R/C	Y	1	N	N	R/C	N	Y	Alarm 1 (Hupenbefehl)	N	N
167	111	R110	EA10	7UT513	O.PRETAZ.2 VYPNUTA	KON	ZAC	22	27	32	39	75	SI	R/C	N				N	N	R/C	N	Y		N	N
167	112	R110	EA10	7UT513	O.PRETAZ.2 BLOKOV.	KON	ZAC	22	27	32	39	75	SI	R/C	N				N	N	R/C	N	Y		N	N
167	113	R110	EA10	7UT513	O.PRETAZ.2 V CINN.	KON	ZAC	22	27	32	39	75	SI	R/C	N				N	N	R/C	N	Y		N	N
167	115	R110	EA10	7UT513	O.PRETAZ.2 PRUD.VYSTR	KON	ZAC	22	27	32	39	75	SI	R/C	N				N	N	R/C	N	Y		N	N
167	116	R110	EA10	7UT513	O.PRETAZ.2 TEPEL.VYSTR	KON	ZAC	22	27	32	39	75	SI	R/C	N				N	N	R/C	N	Y		N	N
167	121	R110	EA10	7UT513	O.PRETAZ.2 VYP.POVEL	KON	ZAC	22	27	32	39	78	SI	R/C	Y	R/C	Y	1	N	N	R/C	N	Y	Alarm 1 (Hupenbefehl)	N	N

Proprietary data, company confidential. All rights reserved.
Confia a ltre de secret d'entreprise. Tous droits reservs.
Comunicado como segredo empresarial. Reservados todos os direitos.
Confiado como secreto industrial. Nos reservamos todos los derechos.
The reproduction, transmission or use of this document or its contents is not permitted without express written authority. Offenders will be liable for damages. All rights, including rights created by patent grant or registration of a utility model or design, are reserved.

Documentation structure: Standard
Source file: KO050722.ODA

Date	22.07.2005	VSZ KOSICE	SIEMENS AG ISATOOLS	Substation control system 6MB
Drawn	LANG			Numerical protection device:
Appr.				Indications
Norm		Orig./Repl. 1/Repl. by		Table

Remarks | Date | Name

T = /BE 60
+
-S104
Page

Proprietary data, company confidential. All rights reserved.
Confia a titre de secret d'entreprise. Tous droits reservés.
Comunicado como segredo empresarial. Reservados todos os direitos.
Confiado como secreto industrial. Nos reservamos todos los derechos.

The reproduction, transmission or use of this document or its
is not permitted without expres written authority.
Offenders will be liable for damages. All rights, including rights
created by patent grant or registration of a utility model or design, are reserved.

Station:
Device EA11 7SD502
Device type: 7SD502/503
Function type: 7SD502/503
Manufact.: SIEMENS

Packet number: 3
Version number: 0

Connection Device: EA11 EAG
Subrack: EA11 7SD502
Module:
Comm. processor:
Channel connection
UART: 2
MUX:

Function type	Info number	Section	Bay	Logical device	Lower limit	Value text	Column section	Column bay	Column logical device	Column information	Column value text	Indication type	Entry in event list	Entry in alarm list	Acknowledge	Display in indication area	Indication class	Entry in SML	Display in diagram	Archive	Operational indications	Protection indications	Command derivation	FP/SC	Command output
	19	R110	EA11	7SD502	NASTAVENIE LED ZOBR.		22	27	32	39	0	TR	O	N				N	N	R	N	Y		N	N
	22	R110	EA11	7SD502	PARAMETRIZACIA OCHRANY	KON ZAC	22	27	32	39	75	SI	R/C	N				N	N	R/C	N	Y		N	N
	23	R110	EA11	7SD502	PARAMETRIZ.AKT.SADA A	KON ZAC	22	27	32	39	75	SI	R/C	N				N	N	R/C	N	Y		N	N
	24	R110	EA11	7SD502	PARAMETRIZ.AKT.SADA B	KON ZAC	22	27	32	39	75	SI	R/C	N				N	N	R/C	N	Y		N	N
	25	R110	EA11	7SD502	PARAMETRIZ.AKT.SADA C	KON ZAC	22	27	32	39	75	SI	R/C	N				N	N	R/C	N	Y		N	N
	26	R110	EA11	7SD502	PARAMETRIZ.AKT.SADA D	KON ZAC	22	27	32	39	75	SI	R/C	N				N	N	R/C	N	Y		N	N
	27	R110	EA11	7SD502	POSOBENIE PLAST.OCHR	KON ZAC	22	27	32	39	75	SI	R/C	N				N	N	R/C	N	Y		N	N
	68	R110	EA11	7SD502	DIF.O: VYP ST.IDIFF>		22	27	32	39		TR	O	Y	O	Y	1	N	N	R	N	Y	Alarm 1 (Hupenbefehl)	N	N
	84	R110	EA11	7SD502	DIF.O:GEN.POPUD	KON ZAC	22	27	32	39	78	SI	R/C	Y	R/C	Y	1	N	N	R/C	N	Y	Alarm 1 (Hupenbefehl)	N	N
51	111	R110	EA11	7SD502	VAZBA JE VYPNUTA	KON ZAC	22	27	32	39	75	SI	R/C	N				N	N	R/C	N	Y		N	N
51	113	R110	EA11	7SD502	VAZBA V CINNOSTI	KON ZAC	22	27	32	39	75	SI	R/C	N				N	N	R/C	N	Y		N	N
51	117	R110	EA11	7SD502	VAZBA VYP. IMPULZ	KON ZAC	22	27	32	39	78	SI	R/C	N				N	N	R/C	N	Y		N	N
62	6	R110	EA11	7SD502	REZ.BLOK.STUP.I>>	KON ZAC	22	27	32	39	75	SI	R/C	N				N	N	R/C	N	Y		N	N
62	7	R110	EA11	7SD502	REZ.BLOK.STUP.I>/Ip	KON ZAC	22	27	32	39	75	SI	R/C	N				N	N	R/C	N	Y		N	N
62	103	R110	EA11	7SD502	REZ. V. CINNOSTI	KON ZAC	22	27	32	39	75	SI	R/C	N				N	N	R/C	N	Y		N	N
62	111	R110	EA11	7SD502	REZ.GEN.POPUD		22	27	32	39		TR	O	Y	O	Y	1	N	N	R	N	Y	Alarm 1 (Hupenbefehl)	N	N
62	121	R110	EA11	7SD502	REZ.POPUD I>>		22	27	32	39		TR	O	Y	O	Y	1	N	N	R	N	Y	Alarm 1 (Hupenbefehl)	N	N
62	122	R110	EA11	7SD502	REZ.POPUD I>/Ip		22	27	32	39		TR	O	Y	O	Y	1	N	N	R	N	Y	Alarm 1 (Hupenbefehl)	N	N
62	141	R110	EA11	7SD502	REZ.SKRAT.CAS		22	27	32	39		TR	O	Y	O	Y	1	N	N	R	N	Y	Alarm 1 (Hupenbefehl)	N	N
62	142	R110	EA11	7SD502	REZ.NADPR.CAS		22	27	32	39		TR	O	Y	O	Y	1	N	N	R	N	Y	Alarm 1 (Hupenbefehl)	N	N
62	151	R110	EA11	7SD502	REZ.GEN.VYP.IMPULZ		22	27	32	39		TR	O	Y	O	Y	1	N	N	R	N	Y	Alarm 1 (Hupenbefehl)	N	N
92	17	R110	EA11	7SD502	DIF.O:V CINNOSTI	KON ZAC	22	27	32	39	75	SI	R/C	N				N	N	R/C	N	Y		N	N
93	11	R110	EA11	7SD502	DIAL.VYPINANIE VYPNUTE	KON ZAC	22	27	32	39	75	SI	R/C	N				N	N	R/C	N	Y		N	N
93	16	R110	EA11	7SD502	DIAL.VYP.IMP.VYSLANY	KON ZAC	22	27	32	39	75	SI	R/C	N				N	N	R/C	N	Y		N	N
93	41	R110	EA11	7SD502	VYP.PROTIST:VYPNUTE	KON ZAC	22	27	32	39	75	SI	R/C	N				N	N	R/C	N	Y		N	N
93	43	R110	EA11	7SD502	VYP.PROTIST.V.CINNOSTI	KON ZAC	22	27	32	39	75	SI	R/C	N				N	N	R/C	N	Y		N	N
93	46	R110	EA11	7SD502	VYP.PROTIS:POPUD	KON ZAC	22	27	32	39	78	SI	R/C	Y	R/C	Y	1	N	N	R/C	N	Y	Alarm 1 (Hupenbefehl)	N	N
93	47	R110	EA11	7SD502	VYP.PROTIS:VYP.IMP	KON ZAC	22	27	32	39	78	SI	R/C	Y	R/C	Y	1	N	N	R/C	N	Y	Alarm 1 (Hupenbefehl)	N	N
93	71	R110	EA11	7SD502	KONTR.PREN.CES.VYPNUTA	KON ZAC	22	27	32	39	75	SI	R/C	N				N	N	R/C	N	Y		N	N
93	76	R110	EA11	7SD502	POR.POM.PRENOS.CESTY	KON ZAC	22	27	32	39	75	SI	R/C	N				N	N	R/C	N	Y		N	N
135	81	R110	EA11	7SD502	OCHRANA PRIPRAVENA	KON ZAC	22	27	32	39	75	SI	R/C	N				N	N	R/C	N	Y		N	N
135	130	R110	EA11	7SD502	BUFER SIGN. PREPLNENY		22	27	32	39	0	TR	O	N				N	N	R	N	Y		N	N

Documentation structur: Standard
Source file: KO050722.ODA

Date	22.07.2005	VSZ	
Drawn	LANG	KOSICE	
Appr.			
Rev.	Remarks	Date	Name Norm

Orig./Repl. 1/Repl. by

SIEMENS AG
ISATOOLS

Substation control system 6MB
Numerical protection device:
Indications
Table

T = /BE 61
+
-S104
Page 61

Station:

Device: EA11 7SD502
Device type: 7SD502/503
Function type: 7SD502/503
Manufact.: SIEMENS

Packet number: 3
Version number: 0

Connection Device: EA11 EAG
Subrack: EA11 7SD502
Module:
Comm. processor:
Channel connection
UART: 2
MUX:

Function type	Info number	Section	Bay	Logical device	Lower limit	Value text	Column section	Column bay	Column logical device	Column information	Column value text	Indication type	Entry in event list	Entry in alarm list	Acknowledge	Display in indication area	Indication class	Entry in SML	Display in diagram	Archive	Operational indications	Protection indications	Command derivation	Tel ctrl FP/SC	Command output
135	131	R110	EA11	7SD502	STRATA SIGN. PRE LSA		22	27	32	39	0	TR	O	N				N	N	R	N	Y		N	N
135	166	R110	EA11	7SD502	PORUCHA V/V JEDN.C.1	KON ZAC	22	27	32	39	75	SI	R/C	N				N	N	R/C	N	Y		N	N
135	170	R110	EA11	7SD502	PORUCHA V/V JEDNOTKY	KON ZAC	22	27	32	39	75	SI	R/C	N				N	N	R/C	N	Y		N	N
135	231	R110	EA11	7SD502	PORUCHA NAPAJ.OCHR.	KON ZAC	22	27	32	39	78	SI	R/C	Y	R/C	Y	1	N	N	R/C	N	Y	Alarm 1 (Hupenbefehl)	N	N
150	152	R110	EA11	7SD502	SUM.ZRUS.POSOB.OCHR.		22	27	32	39	0	TR	O	Y	O	Y	1	N	N	R	N	Y	Alarm 1 (Hupenbefehl)	N	N
150	161	R110	EA11	7SD502	SUM.GEN.VYP.IMPULZ		22	27	32	39	0	TR	O	Y	O	Y	1	N	N	R	N	Y	Alarm 1 (Hupenbefehl)	N	N
167	13	R110	EA11	7SD502	O.PRETAZ:V CINNOSTI	KON ZAC	22	27	32	39	75	SI	R/C	N				N	N	R/C	N	Y		N	N
167	15	R110	EA11	7SD502	O.PRETAZ:PRUD.VYSTR	KON ZAC	22	27	32	39	75	SI	R/C	N				N	N	R/C	N	Y		N	N
167	16	R110	EA11	7SD502	O.PRETAZ:TEPEL.VYSTR.	KON ZAC	22	27	32	39	75	SI	R/C	N				N	N	R/C	N	Y		N	N
167	17	R110	EA11	7SD502	O.PRETAZ:POPUD	KON ZAC	22	27	32	39	75	SI	R/C	N				N	N	R/C	N	Y		N	N
167	21	R110	EA11	7SD502	O.PRETAZ:VYP.POVEL		22	27	32	39		TR	O	Y	O	Y	1	N	N	R	N	Y	Alarm 1 (Hupenbefehl)	N	N

Proprietary data, company confidential. All rights reserved.
Confie a titre de secret d'entreprise. Tous droits r,serv,s.
Comunicado como segredo empresarial. Reservados todos os direitos.
Confiado como secreto industrial. Nos reservamos todos los derechos.

The reproduction, transmission or use of this document or its is not permitted without expres written authority.
Offenders will be liable for damages. All rights, including rights created by patent grant or registration of a utility model or design, are reserved.

Documentation structur: Standard
Source file: KO050722.ODA

R	Remarks	Date	Name	Date	22.07.2005	VSZ KOSICE	SIEMENS AG ISA TOOLS	Substation control system 6MB
				Drawn	LANG			Numerical protection device:
				Appr.				Indications
				Norm		Orig./Repl. 1/Repl. by		Table

T = /BE 62
+
-S104
Page

Proprietary data, company confidential. All rights reserved.
Confia a ltrie de secret d'entreprise. Tous droits reservs.
Comunicado como segredo empresarial. Reservados todos os direitos.
Confiado como secreto industrial. Nos reservamos todos los derechos.
The reproduction, transmission or use of this document or its
is not permitted without expres written authority.
Offenders will be liable for damages. All rights, including rights
created by patent grant or registration of a utility model or design, are reserved.

Station:

Device EA11 7SJ511
Device type: 7SJ511
Function type: 7SJ511
Manufact.: SIEMENS

Packet number: 3
Version number: 0

Connection Device: EA11 EAG
Subrack: EA11 7SJ511
Module:
Comm. processor:
Channel connection
UART: 2
MUX:

Function type	Info number	Section	Bay	Logical device	Lower limit	Value text	Column section	Column bay	Column logical device	Column information	Column value text	Indication type	Entry in event list	Entry in alarm list	Acknowledge	Display in indication area	Indication class	Entry in SML	Display in diagram	Archive	Operational indications	Protection indications	Command derivation	Tel ctrl FP/SC	Command output
	19	R110	EA11	7SJ511	NASTAVENIE LED ZOBR.		22	27	32	39	0	TR	O	N				N	N	R	N	Y		N	N
	22	R110	EA11	7SJ511	PARAMETRIZACIA OCHRANY	KON ZAC	22	27	32	39	75	SI	R/C	N				N	N	R/C	N	Y		N	N
	27	R110	EA11	7SJ511	ANWENDERDEF. MELDUNG 1	KON ZAC	22	27	32	39	75	SI	N	N				N	N	N				N	N
	84	R110	EA11	7SJ511	NADPR.OCHR.GEN.POPUD	KON ZAC	22	27	32	39	78	SI	R/C	Y	R/C	Y	1	N	N	R/C	N	Y	Alarm 1 (Hupenbefehl)	N	N
	90	R110	EA11	7SJ511	NADPR.OCHR.VYP.IMP		22	27	32	39		TR	O	Y	O	Y	1	N	N	R	N	Y	Alarm 1 (Hupenbefehl)	N	N
	91	R110	EA11	7SJ511	SKRAT.OCHR.VYP.IMP.		22	27	32	39		TR	O	Y	O	Y	1	N	N	R	N	Y	Alarm 1 (Hupenbefehl)	N	N
60	1	R110	EA11	7SJ511	NADPR.OCHR.BLOK.I>>	KON ZAC	22	27	32	39	75	SI	R/C	N				N	N	R/C	N	Y		N	N
60	2	R110	EA11	7SJ511	NADPR.OCHR.BLOK.I>	KON ZAC	22	27	32	39	75	SI	R/C	N				N	N	R/C	N	Y		N	N
60	46	R110	EA11	7SJ511	SKRAT.OCHR.POPUD L1	KON ZAC	22	27	32	39	78	SI	R/C	Y	R/C	Y	1	N	N	R/C	N	Y	Alarm 1 (Hupenbefehl)	N	N
60	47	R110	EA11	7SJ511	SKRAT.OCHR.POPUD L2	KON ZAC	22	27	32	39	78	SI	R/C	Y	R/C	Y	1	N	N	R/C	N	Y	Alarm 1 (Hupenbefehl)	N	N
60	48	R110	EA11	7SJ511	SKRAT.OCHR.POPUD L3	KON ZAC	22	27	32	39	78	SI	R/C	Y	R/C	Y	1	N	N	R/C	N	Y	Alarm 1 (Hupenbefehl)	N	N
60	49	R110	EA11	7SJ511	SKRAT.OCHR.CAS		22	27	32	39		TR	O	Y	O	Y	1	N	N	R	N	Y	Alarm 1 (Hupenbefehl)	N	N
60	50	R110	EA11	7SJ511	NADPR.OCHR.POPUD L1	KON ZAC	22	27	32	39	78	SI	R/C	Y	R/C	Y	1	N	N	R/C	N	Y	Alarm 1 (Hupenbefehl)	N	N
60	51	R110	EA11	7SJ511	NADPR.OCHR.POPUD L2	KON ZAC	22	27	32	39	78	SI	R/C	Y	R/C	Y	1	N	N	R/C	N	Y	Alarm 1 (Hupenbefehl)	N	N
60	52	R110	EA11	7SJ511	NADPR.OCHR.POPUD L3	KON ZAC	22	27	32	39	78	SI	R/C	Y	R/C	Y	1	N	N	R/C	N	Y	Alarm 1 (Hupenbefehl)	N	N
60	53	R110	EA11	7SJ511	NADPR.OCHR.CAS		22	27	32	39		TR	O	Y	O	Y	1	N	N	R	N	Y	Alarm 1 (Hupenbefehl)	N	N
135	81	R110	EA11	7SJ511	OCHRANA PRIPRAVENA	KON ZAC	22	27	32	39	75	SI	R/C	N				N	N	R/C	N	Y		N	N
135	130	R110	EA11	7SJ511	BUFER SIGN. PREPLNENY		22	27	32	39	0	TR	O	N				N	N	R	N	Y		N	N
135	131	R110	EA11	7SJ511	STRATA SIGN. PRE LSA		22	27	32	39	0	TR	O	N				N	N	R	N	Y		N	N
135	231	R110	EA11	7SJ511	PORUCHA NAPAJ.OCHR.	KON ZAC	22	27	32	39	78	SI	R/C	Y	R/C	Y	1	N	N	R/C	N	Y	Alarm 1 (Hupenbefehl)	N	N
150	151	R110	EA11	7SJ511	SUM.POSOBENIE OCHR.		22	27	32	39	0	TR	O	Y	O	Y	1	N	N	R	N	Y	Alarm 1 (Hupenbefehl)	N	N
150	152	R110	EA11	7SJ511	SUM.ZRUS.POSOB.OCHR.		22	27	32	39	0	TR	O	Y	O	Y	1	N	N	R	N	Y	Alarm 1 (Hupenbefehl)	N	N
150	161	R110	EA11	7SJ511	SUM.GEN.VYP.IMPULZ		22	27	32	39	0	TR	O	Y	O	Y	1	N	N	R	N	Y	Alarm 1 (Hupenbefehl)	N	N
150	171	R110	EA11	7SJ511	VYPIN.PRUD. L1 I/In=		22	27	32	39	0	NV	O	Y	O	Y	1	N	N	R	N	Y	Alarm 1 (Hupenbefehl)	N	N
150	172	R110	EA11	7SJ511	VYPIN.PRUD. L2 I/In=		22	27	32	39	0	NV	O	Y	O	Y	1	N	N	R	N	Y	Alarm 1 (Hupenbefehl)	N	N
150	173	R110	EA11	7SJ511	VYPIN.PRUD. L3 I/In=		22	27	32	39	0	NV	O	Y	O	Y	1	N	N	R	N	Y	Alarm 1 (Hupenbefehl)	N	N
167	11	R110	EA11	7SJ511	O.PRETAZ. VYPNUTA	KON ZAC	22	27	32	39	78	SI	N	N				N	N	N				N	N
167	12	R110	EA11	7SJ511	O.PRETAZ. BLOKOVANA	KON ZAC	22	27	32	39	78	SI	N	N				N	N	N				N	N
167	15	R110	EA11	7SJ511	O.PRETAZ:PRUD.VYSTR	KON ZAC	22	27	32	39	78	SI	N	N				N	N	N				N	N
167	16	R110	EA11	7SJ511	O.PRETAZ. TEPEL.VYSTR	KON ZAC	22	27	32	39	78	SI	N	N				N	N	N				N	N
167	21	R110	EA11	7SJ511	O.PRETAZ. VYP.POVEL		22	27	32	39		SI	N	N				N	N	N				N	N

Documentation structur: Standard
Source file: KO050722.ODA

Rev.	Remarks	Date	Name	Norm	Orig./Repl. 1/Repl. by
				Date 22.07.2005	VSZ KOSICE
				Drawn LANG	
				Appr.	

SIEMENS AG
ISATOOLS

Substation control system 6MB
Numerical protection device:
Indications
Table

T = /BE 63
+
-S104
Page 63

Proprietary data, company confidential. All rights reserved
Confiado como secreto industrial. Nos reservamos todos los derechos.
Comunicado como segredo empresarial. Reservados todos os direitos.
Confiado como secreto industrial. Nos reservamos todos los derechos.
The reproduction, transmission or use of this document or its
is not permitted without expres written authority.
Offenders will be liable for damages. All rights, including rights
created by patent grant or registration of a utility model or design, are reserved

Station:

Device EA12 7SJ512
Device type: 7SJ512
Function type: 7SJ512
Manufact.: SIEMENS

Packet number: 3
Version number: 0

Connection Device: EA12 EAG
Subrack: EA12 7SJ512
Module:
Comm. processor:
Channel connection
UART: 2
MUX:

Function type	Info number	Section	Bay	Logical device	Lower limit	Value text	Column section	Column bay	Column logical device	Column information	Column value text	Indication type	Entry in event list	Entry in alarm list	Acknowledge	Display in indication area	Indication class	Entry in SML	Display in diagram	Archive	Operational indications	Protection indications
	19	R110	EA12	7SJ512	NASTAVENIE LED ZOBR.		22	27	32	39	0	TR	O	N				N	N	R	N	Y
	22	R110	EA12	7SJ512	PARAMETRIZACIA OCHRANY	KON ZAC	22	27	32	39	75	SI	R/C	N				N	N	R/C	N	Y
	27	R110	EA12	7SJ512	ANWENDERDEF. MELDUNG 1	KON ZAC	22	27	0	39	75	SI	N	N				N	N	N		
	28	R110	EA12	7SJ512	ANWENDERDEF. MELDUNG 2	KON ZAC	22	27	32	39	75	SI	N	N				N	N	N		
	29	R110	EA12	7SJ512	ANWENDERDEF. MELDUNG 3	KON ZAC	22	27	32	39	75	SI	N	N				N	N	N		
	30	R110	EA12	7SJ512	ANWENDERDEF. MELDUNG 4	KON ZAC	22	27	32	39	75	SI	N	N				N	N	N		
	32	R110	EA12	7SJ512	PORUCHA MER. PRUDU	KON ZAC	22	27	32	39	75	SI	R/C	N				N	N	R/C	N	Y
	33	R110	EA12	7SJ512	PORUCHA MER.NAPATIA	KON ZAC	22	27	32	39	75	SI	R/C	N				N	N	R/C	N	Y
	36	R110	EA12	7SJ512	KONTROLA VYST.JEDN.	KON ZAC	22	27	32	39	75	SI	R/C	N				N	N	R/C	N	Y
	48	R110	EA12	7SJ512	ZEMNE SPOJENIE V L1	KON ZAC	22	27	32	39	75	SI	N	N				N	N	N		
	49	R110	EA12	7SJ512	ZEMNE SPOJENIE V L2	KON ZAC	22	27	32	39	75	SI	N	N				N	N	N		
	50	R110	EA12	7SJ512	ZEMNE SPOJENIE V L3	KON ZAC	22	27	32	39	75	SI	N	N				N	N	N		
	68	R110	EA12	7SJ512	NADPR.O.GEN.VYP.IMP		22	27	32	39		TR	O	Y	O	Y	1	N	N	R	N	Y
	74	R110	EA12	7SJ512	SUM.VYP.IMP.VPRED		22	27	32	39		TR	O	Y	O	Y	1	N	N	R	N	Y
	75	R110	EA12	7SJ512	SUM.VYP.IMP.VZAD		22	27	32	39		TR	O	Y	O	Y	1	N	N	R	N	Y
	84	R110	EA12	7SJ512	NADPR.OCHR.GEN.POPUD	KON ZAC	22	27	32	39	78	SI	R/C	Y	R/C	Y	1	N	N	R/C	N	Y
	90	R110	EA12	7SJ512	NADPR.OCHR.VYP.IMP2		22	27	32	39		TR	O	N				N	N	N		
	91	R110	EA12	7SJ512	SKRAT.OCHR.VYP.IMP.		22	27	32	39		TR	O	Y	O	Y	1	N	N	R	N	Y
60	46	R110	EA12	7SJ512	SKRAT.OCHR.POPUD L1	KON ZAC	22	27	32	39	78	SI	R/C	Y	R/C	Y	1	N	N	R/C	N	Y
60	47	R110	EA12	7SJ512	SKRAT.OCHR.POPUD L2	KON ZAC	22	27	32	39	78	SI	R/C	Y	R/C	Y	1	N	N	R/C	N	Y
60	48	R110	EA12	7SJ512	SKRAT.OCHR.POPUD L3	KON ZAC	22	27	32	39	78	SI	R/C	Y	R/C	Y	1	N	N	R/C	N	Y
60	49	R110	EA12	7SJ512	SKRAT.OCHR.CAS		22	27	32	39		TR	O	Y	O	Y	1	N	N	R	N	Y
60	50	R110	EA12	7SJ512	NADPR.OCHR.POPUD L1	KON ZAC	22	27	32	39	78	SI	R/C	Y	R/C	Y	1	N	N	R/C	N	Y
60	51	R110	EA12	7SJ512	NADPR.OCHR.POPUD L2	KON ZAC	22	27	32	39	78	SI	R/C	Y	R/C	Y	1	N	N	R/C	N	Y
60	52	R110	EA12	7SJ512	NADPR.OCHR.POPUD L3	KON ZAC	22	27	32	39	78	SI	R/C	Y	R/C	Y	1	N	N	N		
60	53	R110	EA12	7SJ512	NADPR.OCHR.CAS		22	27	32	39		TR	O	Y	O	Y	1	N	N	R	N	Y
63	21	R110	EA12	7SJ512	NADPR.SMER.POPUD L1	KON ZAC	22	27	32	39	78	SI	R/C	Y	R/C	Y	1	N	N	R/C	N	Y
63	22	R110	EA12	7SJ512	NADPR.SMER.POPUD L2	KON ZAC	22	27	32	39	78	SI	R/C	Y	R/C	Y	1	N	N	R/C	N	Y
63	23	R110	EA12	7SJ512	NADPR.SMER.POPUD L3	KON ZAC	22	27	32	39	78	SI	R/C	Y	R/C	Y	1	N	N	R/C	N	Y
63	24	R110	EA12	7SJ512	NADPR.SMER.OCHR.CAS		22	27	32	39		TR	O	Y	O	Y	1	N	N	R	N	Y
135	81	R110	EA12	7SJ512	OCHRANA PRIPRAVENA	KON ZAC	22	27	32	39	75	SI	R/C	N				N	N	R/C	N	Y
135	130	R110	EA12	7SJ512	BUFER SIGN. PREPLNENY		22	27	32	39	0	TR	O	N				N	N	R	N	Y

Documentation structur: Standard
Source file: KO050722.ODA

Date 22.07.2005
Drawn LANG
Appr.
Norm

VSZ
KOSICE

SIEMENS AG
ISAOOLS

Substation control system 6MB
Numerical protection device:
Indications
Table

T = /BE 64
+

-S104

Page

Remarks | Date | Name | Orig./Repl. 1/Repl. by

Station:
Device EA12 7SJ512
Device type: 7SJ512
Function type: 7SJ512
Manufact.: SIEMENS

Packet number: 3
Version number: 0

Connection Device: EA12 EAG
Subrack: EA12 7SJ512
Module:
Comm. processor:
Channel connection
UART: 2
MUX:

Function type	Info number	Command derivation	Indication derivation	Tel ctrl FP/SC	Command output
	19			N	N
	22			N	N
	27		7SJ512 OCHRANA NADOBY VYPNUTI	N	N
	28		KA2 NADRP.OCHR.POSOBENIE	N	N
	29		LA403 NADRP.OCHR.POSOBENIE	N	N
	30			N	N
	32			N	N
	33			N	N
	36			N	N
	48			N	N
	49			N	N
	50			N	N
	68	Alarm 1 (Hupenbefehl)		N	N
	74	Alarm 1 (Hupenbefehl)		N	N
	75	Alarm 1 (Hupenbefehl)		N	N
	84	Alarm 1 (Hupenbefehl)		N	N
	90			N	N
	91	Alarm 1 (Hupenbefehl)		N	N
60	46	Alarm 1 (Hupenbefehl)		N	N
60	47	Alarm 1 (Hupenbefehl)		N	N
60	48	Alarm 1 (Hupenbefehl)		N	N
60	49	Alarm 1 (Hupenbefehl)		N	N
60	50	Alarm 1 (Hupenbefehl)		N	N
60	51	Alarm 1 (Hupenbefehl)		N	N
60	52	Alarm 1 (Hupenbefehl)		N	N
60	53	Alarm 1 (Hupenbefehl)		N	N
63	21	Alarm 1 (Hupenbefehl)		N	N
63	22	Alarm 1 (Hupenbefehl)		N	N
63	23	Alarm 1 (Hupenbefehl)		N	N
63	24	Alarm 1 (Hupenbefehl)		N	N
135	81			N	N
135	130			N	N

Proprietary data, company confidential. All rights reserved.
Confie a titre de secret d'entreprise. Tous droits réservés.
Comunicado como segredo empresarial. Reservados todos os direitos.
Confiado como secreto industrial. Nos reservamos todos los derechos.
The reproduction, transmission or use of this document or its is not permitted without express written authority.
Offenders will be liable for damages. All rights, including rights created by patent grant or registration of a utility model or design, are reserved.

Documentation structur: Standard
Source file: KO050722.ODA

Rev.	Remarks	Date	Name	Date	22.07.2005	VSZ KOSICE	SIEMENS AG ISAOOLS	Substation control system 6MB
				Drawn	LANG			Numerical protection device:
				Appr.				Indications
				Norm		Orig./Repl. 1/Repl. by		Table

T = /BE 65
+
-S104
Page 65

Station:
Device EA12 7SJ512
Device type: 7SJ512
Function type: 7SJ512
Manufact.: SIEMENS

Packet number: 3
Version number: 0

Connection Device: EA12 EAG
Subrack: EA12 7SJ512
Module:
Comm. processor:
Channel connection
UART: 2
MUX:

Function type	Info number	Section	Bay	Logical device	Lower limit	Value text	Column section	Column bay	Column logical device	Column information	Column value text	Indication type	Entry in event list	Entry in alarm list	Acknowledge	Display in indication area	Indication class	Entry in SML	Display in diagram	Archive	Operational indications	Protection indications
135	131	R110	EA12	7SJ512	STRATA SIGN. PRE LSA		22	27	32	39	0	TR	O	N				N	N	R	N	Y
135	170	R110	EA12	7SJ512	PORUCHA V/V JEDNOTKY	KON ZAC	22	27	32	39	75	SI	R/C	N				N	N	R/C	N	Y
135	231	R110	EA12	7SJ512	PORUCHA NAPAJ.OCHR.	KON ZAC	22	27	32	39	78	SI	R/C	Y	R/C	Y	1	N	N	R/C	N	Y
150	151	R110	EA12	7SJ512	SUM.POSOBENIE OCHR.		22	27	32	39	0	TR	O	Y	O	Y	1	N	N	R	N	Y
150	152	R110	EA12	7SJ512	SUM.ZRUS.POSOB.OCHR.		22	27	32	39	0	TR	O	Y	O	Y	1	N	N	R	N	Y
150	161	R110	EA12	7SJ512	SUM.GEN.VYP.IMPULZ		22	27	32	39	0	TR	O	Y	O	Y	1	N	N	R	N	Y
150	171	R110	EA12	7SJ512	VYPIN.PRUD. L1 I/In=		22	27	32	39	0	NV	O	Y	O	Y	1	N	N	R	N	Y
150	172	R110	EA12	7SJ512	VYPIN.PRUD. L2 I/In=		22	27	32	39	0	NV	O	Y	O	Y	1	N	N	R	N	Y
150	173	R110	EA12	7SJ512	VYPIN.PRUD. L3 I/In=		22	27	32	39	0	NV	O	Y	O	Y	1	N	N	R	N	Y
167	11	R110	EA12	7SJ512	O.PRETAZ. VYPNUTA	KON ZAC	22	27	32	39	75	SI	R/C	N				N	N	R/C	N	Y
167	12	R110	EA12	7SJ512	O.PRETAZ. BLOKOV.	KON ZAC	22	27	32	39	75	SI	R/C	N				N	N	R/C	N	Y
167	13	R110	EA12	7SJ512	O.PRETAZ. V CINNOSTI	KON ZAC	22	27	32	39	75	SI	R/C	N				N	N	R/C	N	Y
167	15	R110	EA12	7SJ512	O.PRETAZ. PRUD.VYSTR	KON ZAC	22	27	32	39	75	SI	R/C	N				N	N	R/C	N	Y
167	16	R110	EA12	7SJ512	O.PRETAZ. TEPEL.VYSTR	KON ZAC	22	27	32	39	75	SI	R/C	N				N	N	R/C	N	Y
167	21	R110	EA12	7SJ512	O.PRETAZ. VYP.POVEL		22	27	32	39		TR	O	N				N	N	R	N	Y

Proprietary data, company confidential. All rights reserved
Confie a titre de secret d'entreprise. Tous droits reservés.
Comunicado como segredo empresarial. Reservados todos os direitos.
Confiado como secreto industrial. Nos reservamos todos los derechos.
The reproduction, transmission or use of this document or its is not permitted without expres written authority.
Offenders will be liable for damages. All rights, including rights created by patent grant or registration of a utility model or design, are reserved

Documentation structur: Standard
Source file: KO050722.ODA

Rev	Remarks	Date	Name	Date	22.07.2005	VSZ KOSICE	SIEMENS AG ISA TOOLS	Substation control system 6MB
				Drawn	LANG			Numerical protection device:
				Appr.				Indications
				Norm		Orig./Repl. 1/Repl. by		Table

T = /BE 66
+
-S104
Page

Station:
Device EA12 7SJ512
Device type: 7SJ512
Function type: 7SJ512
Manufact.: SIEMENS

Packet number: 3
Version number: 0

Connection Device: EA12 EAG
Subrack: EA12 7SJ512
Module:
Comm. processor:
Channel connection
UART: 2
MUX:

Function type	Info number	Command derivation	Indication derivation	Tel ctrl FP/SC	Command output
135	131			N	N
135	170			N	N
135	231	Alarm 1 (Hupenbefehl)		N	N
150	151	Alarm 1 (Hupenbefehl)		N	N
150	152	Alarm 1 (Hupenbefehl)		N	N
150	161	Alarm 1 (Hupenbefehl)		N	N
150	171	Alarm 1 (Hupenbefehl)		N	N
150	172	Alarm 1 (Hupenbefehl)		N	N
150	173	Alarm 1 (Hupenbefehl)		N	N
167	11			N	N
167	12			N	N
167	13			N	N
167	15			N	N
167	16			N	N
167	21			N	N

Proprietary data, company confidential. All rights reserved.
Confia a tire de secret d'entreprise. Tous droits reservs.
Comunicado como segredo empresarial. Reservados todos os direitos.
Confiado como secreto industrial. Nos reservamos todos los derechos.
The reproduction, transmission or use of this document or its contents is not permitted without express written authority. Offenders will be liable for damages. All rights, including rights created by patent grant or registration of a utility model or design, are reserved.

Documentation structur: Standard
Source file: KO050722.ODA

Rev.	Remarks	Date	Name	Norm	Date 22.07.2005	Drawn LANG	Appr.	Orig./Repl. 1/Repl. by

VSZ KOSICE

SIEMENS AG
ISATOOLS

Substation control system 6MB
Numerical protection device:
Indications
Table

T = /BE 67
+
-S104
Page 67

Station:
Device EA12 7UT512
Device type: 7UT51
Function type: 7UT51
Manufact.: SIEMENS

Packet number: 3
Version number: 0

Connection Device: EA12 EAG
Subrack: EA12 7UT512
Module:
Comm. processor:
Channel connection
UART: 2
MUX:

Function type	Info number	Section	Bay	Logical device	Lower limit	Value text	Column section	Column bay	Column logical device	Column information	Column value text	Indication type	Entry in event list	Entry in alarm list	Acknowledge	Display in indication area	Indication class	Entry in SML	Display in diagram	Archive	Operational indications	Protection indications	Command derivation	Tel ctrl FP/SC	Command output
	19	R110	EA12	7UT513	NASTAVENIE LED ZOBR.		22	27	32	39	0	TR	O	N				N	N	R	N	Y		N	N
	22	R110	EA12	7UT513	PARAMETRIZACIA OCHRANY	KON ZAC	22	27	32	39	75	SI	R/C	N				N	N	R/C	N	Y		N	N
	23	R110	EA12	7UT513	PARAMETRIZ.AKT.SADA A	KON ZAC	22	27	32	39	75	SI	R/C	N				N	N	R/C	N	Y		N	N
	24	R110	EA12	7UT513	PARAMETRIZ.AKT.SADA B	KON ZAC	22	27	32	39	75	SI	R/C	N				N	N	R/C	N	Y		N	N
	25	R110	EA12	7UT513	PARAMETRIZ.AKT.SADA C	KON ZAC	22	27	32	39	75	SI	R/C	N				N	N	R/C	N	Y		N	N
	26	R110	EA12	7UT513	PARAMETRIZ.AKT.SADA D	KON ZAC	22	27	32	39	75	SI	R/C	N				N	N	R/C	N	Y		N	N
	27	R110	EA12	7UT513	OCHRANA NADOBY VYPNUTIE	KON ZAC	22	27	0	39	75	SI	R/C	Y	R/C	Y	1	N	N	R/C	N	Y	Alarm 1 (Hupenbefehl)	N	N
	68	R110	EA12	7UT513	DIF.O:VYP.IMPULZ		22	27	32	39		TR	O	Y	O	Y	1	N	N	R	N	Y	Alarm 1 (Hupenbefehl)	N	N
	86	R110	EA12	7UT513	DIF.O:VYP.IMP.L1		22	27	32	39		TR	O	Y	O	Y	1	N	N	R	N	Y	Alarm 1 (Hupenbefehl)	N	N
	87	R110	EA12	7UT513	DIF.O:VYP.IMP.L2		22	27	32	39		TR	O	Y	O	Y	1	N	N	R	N	Y	Alarm 1 (Hupenbefehl)	N	N
	88	R110	EA12	7UT513	DIF.O:VYP.IMP.L3		22	27	32	39		TR	O	Y	O	Y	1	N	N	R	N	Y	Alarm 1 (Hupenbefehl)	N	N
51	131	R110	EA12	7UT513	VAZBA 1 JE VYPNUTA	KON ZAC	22	27	32	39	75	SI	R/C	N				N	N	R/C	N	Y		N	N
51	133	R110	EA12	7UT513	VAZBA 1 V CINNOSTI	KON ZAC	22	27	32	39	75	SI	R/C	N				N	N	R/C	N	Y		N	N
51	136	R110	EA12	7UT513	VAZBA 1 POPUD	KON ZAC	22	27	32	39	78	SI	R/C	Y	R/C	Y	1	N	N	R/C	N	Y	Alarm 1 (Hupenbefehl)	N	N
51	137	R110	EA12	7UT513	VAZBA 1 VYP.IMPULZ		22	27	32	39		TR	O	Y	O	Y	1	N	N	R	N	Y	Alarm 1 (Hupenbefehl)	N	N
62	101	R110	EA12	7UT513	REZ.NADPR.O.VYPNUTA	KON ZAC	22	27	32	39	75	SI	R/C	N				N	N	R/C	N	Y		N	N
62	102	R110	EA12	7UT513	REZ.NADPR.O.BLOKOV.	KON ZAC	22	27	32	39	75	SI	R/C	N				N	N	R/C	N	Y		N	N
62	103	R110	EA12	7UT513	REZ.NADPR.O. V CINN.	KON ZAC	22	27	32	39	75	SI	R/C	N				N	N	R/C	N	Y		N	N
62	111	R110	EA12	7UT513	REZ.GEN.POPUD		22	27	32	39		TR	O	Y	O	Y	1	N	N	R	N	Y	Alarm 1 (Hupenbefehl)	N	N
62	112	R110	EA12	7UT513	REZ.POPUD V L1	KON ZAC	22	27	32	39	78	SI	R/C	Y	R/C	Y	1	N	N	R/C	N	Y	Alarm 1 (Hupenbefehl)	N	N
62	113	R110	EA12	7UT513	REZ.POPUD V L2	KON ZAC	22	27	32	39	78	SI	R/C	Y	R/C	Y	1	N	N	R/C	N	Y	Alarm 1 (Hupenbefehl)	N	N
62	114	R110	EA12	7UT513	REZ.POPUD V L3	KON ZAC	22	27	32	39	78	SI	R/C	Y	R/C	Y	1	N	N	R/C	N	Y	Alarm 1 (Hupenbefehl)	N	N
62	121	R110	EA12	7UT513	REZ.POPUD SKRAT.ST.		22	27	32	39		TR	O	Y	O	Y	1	N	N	R	N	Y	Alarm 1 (Hupenbefehl)	N	N
62	122	R110	EA12	7UT513	REZ.POPUD NADPR.ST.		22	27	32	39		TR	O	Y	O	Y	1	N	N	R	N	Y	Alarm 1 (Hupenbefehl)	N	N
62	141	R110	EA12	7UT513	REZ.SKRAT.O.CAS		22	27	32	39		TR	O	Y	O	Y	1	N	N	R	N	Y	Alarm 1 (Hupenbefehl)	N	N
62	142	R110	EA12	7UT513	REZ.NADPR.O.CAS		22	27	32	39		TR	O	Y	O	Y	1	N	N	R	N	Y	Alarm 1 (Hupenbefehl)	N	N
62	151	R110	EA12	7UT513	REZ.GEN.VYP.IMPULZ		22	27	32	39		TR	O	Y	O	Y	1	N	N	R	N	Y	Alarm 1 (Hupenbefehl)	N	N
75	15	R110	EA12	7UT513	DIF.O:VYPNUTA	KON ZAC	22	27	32	39	75	SI	R/C	N				N	N	R/C	N	Y		N	N
75	16	R110	EA12	7UT513	DIF.O:BLOKOVANA	KON ZAC	22	27	32	39	75	SI	R/C	N				N	N	R/C	N	Y		N	N
75	17	R110	EA12	7UT513	DIF.O:V CINNOSTI	KON ZAC	22	27	32	39	75	SI	R/C	N				N	N	R/C	N	Y		N	N
75	21	R110	EA12	7UT513	DIF.O: ONESK.IDIFF>		22	27	32	39		TR	O	Y	O	Y	1	N	N	R	N	Y	Alarm 1 (Hupenbefehl)	N	N
75	22	R110	EA12	7UT513	DIF.O: ONESK.IDIFF>>		22	27	32	39		TR	O	Y	O	Y	1	N	N	R	N	Y	Alarm 1 (Hupenbefehl)	N	N

Proprietary data, company confidential. All rights reserved.
Confia a ltre da secret d'entreprise. Tous droits reservs.
Comunicado como segredo empresarial. Reservados todos os direitos.
Confiado como secreto industrial. Nos reservamos todos los derechos.
The reproduction, transmission or use of this document or its is not permitted without expres written authority.
Offenders will be liable for damages. All rights, including rights created by patent grant or registration of a utility model or design, are reserved.

Documentation structur: Standard
Source file: KO050722.ODA

Date 22.07.2005
Drawn LANG
Appr.
Remarks Date Name Norm
Orig./Repl. 1/Repl. by

VSZ KOSICE

SIEMENS AG
ISAOOLS

Substation control system 6MB
Numerical protection device:
Indications
Table

T = /BE 68
+
-S104
Page

Proprietary data, company confidential. All rights reserved.
Confia a tire da secret d'entreprise. Tous droits r.serv.s.
Comunicado como segredo empresarial. Reservados todos os direitos.
Confiado como secreto industrial. Nos reservamos todos los derechos.

The reproduction, transmission or use of this document or its is not permitted without express written authority.
Offenders will be liable for damages. All rights, including rights created by patent grant or registration of a utility model or design, are reserved.

Station:
Device EA12 7UT512
Device type: 7UT51
Function type: 7UT51
Manufact.: SIEMENS

Packet number: 3
Version number: 0

Connection Device: EA12 EAG
Subrack: EA12 7UT512
Module:
Comm. processor:
Channel connection
UART: 2
MUX:

Function type	Info number	Section	Bay	Logical device	Lower limit	Value text		Column section	Column bay	Column logical device	Column information	Column value text	Indication type	Entry in event list	Entry in alarm list	Acknowledge	Display in indication area	Indication class	Entry in SML	Display in diagram	Archive	Operational indications	Protection indications	Command derivation	Tel ctrl FP/SC	Command output
75	31	R110	EA12	7UT513	DIF.O:GEN.POPUD	KON	ZAC	22	27	32	39	78	SI	R/C	Y	R/C	Y	1	N	N	R/C	N	Y	Alarm 1 (Hupenbefehl)	N	N
75	81	R110	EA12	7UT513	DIF.O:NADPR.VYP.IMP.L1	KON	ZAC	22	27	32	39	78	SI	R/C	Y	R/C	Y	1	N	N	R/C	N	Y	Alarm 1 (Hupenbefehl)	N	N
75	82	R110	EA12	7UT513	DIF.O:NADPR.VYP.IMP.L2	KON	ZAC	22	27	32	39	78	SI	R/C	Y	R/C	Y	1	N	N	R/C	N	Y	Alarm 1 (Hupenbefehl)	N	N
75	83	R110	EA12	7UT513	DIF.O:NADPR.VYP.IMP.L3	KON	ZAC	22	27	32	39	78	SI	R/C	Y	R/C	Y	1	N	N	R/C	N	Y	Alarm 1 (Hupenbefehl)	N	N
75	84	R110	EA12	7UT513	DIF.O:SKRAT.VYP.IMP.L1	KON	ZAC	22	27	32	39	78	SI	R/C	Y	R/C	Y	1	N	N	R/C	N	Y	Alarm 1 (Hupenbefehl)	N	N
75	85	R110	EA12	7UT513	DIF.O:SKRAT.VYP.IMP.L2	KON	ZAC	22	27	32	39	78	SI	R/C	Y	R/C	Y	1	N	N	R/C	N	Y	Alarm 1 (Hupenbefehl)	N	N
75	86	R110	EA12	7UT513	DIF.O:SKRAT.VYP.IMP.L3	KON	ZAC	22	27	32	39	78	SI	R/C	Y	R/C	Y	1	N	N	R/C	N	Y	Alarm 1 (Hupenbefehl)	N	N
75	91	R110	EA12	7UT513	DIF.O:NADPR.ST.VYP.IMP			22	27	32	39		TR	O	Y	O	Y	1	N	N	R	N	Y	Alarm 1 (Hupenbefehl)	N	N
75	92	R110	EA12	7UT513	DIF.O:SKRAT.ST.VYP.IMP			22	27	32	39		TR	O	Y	O	Y	1	N	N	R	N	Y	Alarm 1 (Hupenbefehl)	N	N
135	81	R110	EA12	7UT513	OCHRANA PRIPRAVENA	KON	ZAC	22	27	32	39	75	SI	R/C	N				N	N	R/C	N	Y		N	N
135	130	R110	EA12	7UT513	BUFER SIGN. PREPLNENY			22	27	32	39	0	TR	O	N				N	N	R	N	Y		N	N
135	131	R110	EA12	7UT513	STRATA SIGN. PRE LSA			22	27	32	39	0	TR	O	N				N	N	R	N	Y		N	N
135	166	R110	EA12	7UT513	PORUCHA V/V JEDN.C.1	KON	ZAC	22	27	32	39	75	SI	R/C	N				N	N	R/C	N	Y		N	N
135	167	R110	EA12	7UT513	PORUCHA V/V JEDN.C.2	KON	ZAC	22	27	32	39	75	SI	R/C	N				N	N	R/C	N	Y		N	N
135	231	R110	EA12	7UT513	PORUCHA V ENERG. SYST.	KON	ZAC	22	27	32	39	78	SI	R/C	Y	R/C	Y	1	N	N	R/C	N	Y	Alarm 1 (Hupenbefehl)	N	N
150	42	R110	EA12	7UT513	BUCHHOLZ VYPNUTIE	KON	ZAC	22	27	0	39	75	SI	R/C	Y	R/C	Y	1	N	N	R/C	N	Y	Alarm 1 (Hupenbefehl)	N	N
150	151	R110	EA12	7UT513	SUM.POSOBENIE OCHR.			22	27	32	39	0	TR	O	Y	O	Y	1	N	N	R	N	Y	Alarm 1 (Hupenbefehl)	N	N
150	152	R110	EA12	7UT513	SUM.ZRUS.POSOB.OCHR.			22	27	32	39	0	TR	O	Y	O	Y	1	N	N	R	N	Y	Alarm 1 (Hupenbefehl)	N	N
150	161	R110	EA12	7UT513	SUM.GEN.VYP.IMPULZ			22	27	32	39	0	TR	O	Y	O	Y	1	N	N	R	N	Y	Alarm 1 (Hupenbefehl)	N	N
167	61	R110	EA12	7UT513	O.PRETAZ.1 VYPNUTA	KON	ZAC	22	27	32	39	75	SI	R/C	N				N	N	R/C	N	Y		N	N
167	62	R110	EA12	7UT513	O.PRETAZ.1 BLOKOV.	KON	ZAC	22	27	32	39	75	SI	R/C	N				N	N	R/C	N	Y		N	N
167	63	R110	EA12	7UT513	O.PRETAZ.1 V CINN.	KON	ZAC	22	27	32	39	75	SI	R/C	N				N	N	R/C	N	Y		N	N
167	65	R110	EA12	7UT513	O.PRETAZ.1 PRUD.VYSTR	KON	ZAC	22	27	32	39	75	SI	R/C	N				N	N	R/C	N	Y		N	N
167	66	R110	EA12	7UT513	O.PRETAZ.1 TEPEL.VYSTR	KON	ZAC	22	27	32	39	75	SI	R/C	N				N	N	R/C	N	Y		N	N
167	71	R110	EA12	7UT513	O.PRETAZ.1 VYP.POVEL	KON	ZAC	22	27	32	39	78	SI	R/C	Y	R/C	Y	1	N	N	R/C	N	Y	Alarm 1 (Hupenbefehl)	N	N
167	111	R110	EA12	7UT513	O.PRETAZ.2 VYPNUTA	KON	ZAC	22	27	32	39	75	SI	R/C	N				N	N	R/C	N	Y		N	N
167	112	R110	EA12	7UT513	O.PRETAZ.2 BLOKOV.	KON	ZAC	22	27	32	39	75	SI	R/C	N				N	N	R/C	N	Y		N	N
167	113	R110	EA12	7UT513	O.PRETAZ.2 V CINN.	KON	ZAC	22	27	32	39	75	SI	R/C	N				N	N	R/C	N	Y		N	N
167	115	R110	EA12	7UT513	O.PRETAZ.2 PRUD.VYSTR	KON	ZAC	22	27	32	39	75	SI	R/C	N				N	N	R/C	N	Y		N	N
167	116	R110	EA12	7UT513	O.PRETAZ.2 TEPEL.VYSTR	KON	ZAC	22	27	32	39	75	SI	R/C	N				N	N	R/C	N	Y		N	N
167	121	R110	EA12	7UT513	O.PRETAZ.2 VYP.POVEL	KON	ZAC	22	27	32	39	78	SI	R/C	Y	R/C	Y	1	N	N	R/C	N	Y	Alarm 1 (Hupenbefehl)	N	N

Documentation structur: Standard
Source file: KO050722.ODA

Rev.	Remarks	Date	Name	Norm

Date 22.07.2005
Drawn LANG
Appr.

VSZ KOSICE
Orig./Repl. 1/Repl. by

SIEMENS AG
ISAIOOLS

Substation control system 6MB
Numerical protection device:
Indications
Table

T = /BE 69
+
-S104
Page 69

Proprietary data, company confidential. All rights reserved.
Confia a ltifra de secret dentreprise. Tous droits rserv's.
Comunicado como segredo empresarial. Reservados todos os direitos.
Confiado como secreto industrial. Nos reservamos todos los derechos.

The reproduction, transmission or use of this document or its is not permitted without expres written authority.
Offenders will be liable for damages. All rights, including rights created by patent grant or registration of a utility model or design, are reserved.

Station:

Device EA13 7SA511
Device type: 7SA511
Function type: 7SA511
Manufact.: SIEMENS

Packet number: 3
Version number: 0

Connection Device: EA13 EAG
Subrack: EA13 7SA511
Module:
Comm. processor:
Channel connection
UART: 2
MUX:

Function type	Info number	Section	Bay	Logical device	Lower limit	Value text		Column section	Column bay	Column logical device	Column information	Column value text	Indication type	Entry in event list	Entry in alarm list	Acknowledge	Display in indication area	Indication class	Entry in SML	Display in diagram	Archive	Operational indications	Protection indications	Command derivation	Tel ctrl FP/SC	Command output
		R110	EA13	7SA511	DIST.O:GEN.POPUD	KON	ZAC	22	27	32	39	78	SI	R/C	Y	R/C	Y	1	N	N	R/C	N	Y	Alarm 1 (Hupenbefehl)	N	N
	19	R110	EA13	7SA511	NASTAVENIE LED ZOBR.			22	27	32	39	0	TR	O	N				N	N	R	N	Y		N	N
	22	R110	EA13	7SA511	PARAMETRIZACIA OCHRANY	KON	ZAC	22	27	32	39	75	SI	R/C	N				N	N	R/C	N	Y		N	N
	23	R110	EA13	7SA511	PARAMETRIZ.AKT.SADA A	KON	ZAC	22	27	32	39	75	SI	R/C	N				N	N	R/C	N	Y		N	N
	24	R110	EA13	7SA511	PARAMETRIZ.AKT.SADA B	KON	ZAC	22	27	32	39	75	SI	R/C	N				N	N	R/C	N	Y		N	N
	25	R110	EA13	7SA511	PARAMETRIZ.AKT.SADA C	KON	ZAC	22	27	32	39	75	SI	R/C	N				N	N	R/C	N	Y		N	N
	26	R110	EA13	7SA511	PARAMETRIZ.AKT.SADA D	KON	ZAC	22	27	32	39	75	SI	R/C	N				N	N	R/C	N	Y		N	N
	38	R110	EA13	7SA511	ISTIC PTN VYPNUTY	KON	ZAC	22	27	32	39	75	SI	R/C	N				N	N	R/C	N	Y		N	N
	48	R110	EA13	7SA511	ZEMNI.SPOJ. V L1	KON	ZAC	22	27	32	39	75	SI	R/C	N				N	N	R/C	N	Y		N	N
	49	R110	EA13	7SA511	ZEMNI.SPOJ. V L2	KON	ZAC	22	27	32	39	75	SI	R/C	N				N	N	R/C	N	Y		N	N
	50	R110	EA13	7SA511	ZEMNI.SPOJ. V L3	KON	ZAC	22	27	32	39	75	SI	R/C	N				N	N	R/C	N	Y		N	N
	51	R110	EA13	7SA511	ZEMNI.SPOJ. VPRED	KON	ZAC	22	27	32	39	75	SI	R/C	N				N	N	R/C	N	Y		N	N
	52	R110	EA13	7SA511	ZEMNI.SPOJ. VZAD	KON	ZAC	22	27	32	39	75	SI	R/C	N				N	N	R/C	N	Y		N	N
	64	R110	EA13	7SA511	DIST.O:POPUD V L1	KON	ZAC	22	27	32	39	78	SI	R/C	Y	R/C	Y	1	N	N	R/C	N	Y	Alarm 1 (Hupenbefehl)	N	N
	65	R110	EA13	7SA511	DIST.O:POPUD V L2	KON	ZAC	22	27	32	39	78	SI	R/C	Y	R/C	Y	1	N	N	R/C	N	Y	Alarm 1 (Hupenbefehl)	N	N
	66	R110	EA13	7SA511	DIST.O:POPUD V L3	KON	ZAC	22	27	32	39	78	SI	R/C	Y	R/C	Y	1	N	N	R/C	N	Y	Alarm 1 (Hupenbefehl)	N	N
	67	R110	EA13	7SA511	DIST.O:POPUD ZEM.	KON	ZAC	22	27	32	39	78	SI	R/C	Y	R/C	Y	1	N	N	R/C	N	Y	Alarm 1 (Hupenbefehl)	N	N
	69	R110	EA13	7SA511	DIST.O:1F.VYP.IMP.L1			22	27	32	39		TR	O	Y	O	Y	1	N	N	R	N	Y	Alarm 1 (Hupenbefehl)	N	N
	70	R110	EA13	7SA511	DIST.O:1F.VYP.IMP.L2			22	27	32	39		TR	O	Y	O	Y	1	N	N	R	N	Y	Alarm 1 (Hupenbefehl)	N	N
	71	R110	EA13	7SA511	DIST.O:1F.VYP.IMP.L3			22	27	32	39		TR	O	Y	O	Y	1	N	N	R	N	Y	Alarm 1 (Hupenbefehl)	N	N
	72	R110	EA13	7SA511	NUDZ.GEN.VYP.IMPULZ			22	27	32	39		TR	O	Y	O	Y	1	N	N	R	N	Y	Alarm 1 (Hupenbefehl)	N	N
	74	R110	EA13	7SA511	DIST.O:POPUD VPRED			22	27	32	39		TR	O	Y	O	Y	1	N	N	R	N	Y	Alarm 1 (Hupenbefehl)	N	N
	75	R110	EA13	7SA511	DIST.O:POPUD VZAD			22	27	32	39		TR	O	Y	O	Y	1	N	N	R	N	Y	Alarm 1 (Hupenbefehl)	N	N
	78	R110	EA13	7SA511	DIST.O:CAS T1			22	27	32	39		TR	O	Y	O	Y	1	N	N	R	N	Y	Alarm 1 (Hupenbefehl)	N	N
	79	R110	EA13	7SA511	DIST.O:CAS T2			22	27	32	39		TR	O	Y	O	Y	1	N	N	R	N	Y	Alarm 1 (Hupenbefehl)	N	N
	80	R110	EA13	7SA511	DIST.O:CAS T3			22	27	32	39		TR	O	Y	O	Y	1	N	N	R	N	Y	Alarm 1 (Hupenbefehl)	N	N
	81	R110	EA13	7SA511	DIST.O:CAS T4			22	27	32	39		TR	O	Y	O	Y	1	N	N	R	N	Y	Alarm 1 (Hupenbefehl)	N	N
	82	R110	EA13	7SA511	DIST.O:CAS T5			22	27	32	39		TR	O	Y	O	Y	1	N	N	R	N	Y	Alarm 1 (Hupenbefehl)	N	N
	128	R110	EA13	7SA511	OZ:ZAPINACI IMPULZ			22	27	32	39	0	TR	O	Y	O	Y	1	N	N	R	N	Y	Alarm 1 (Hupenbefehl)	N	N
28	51	R110	EA13	7SA511	DIST.O:VYPNUTA	KON	ZAC	22	27	32	39	75	SI	R/C	N				N	N	R/C	N	Y		N	N
28	52	R110	EA13	7SA511	DIST.O:BLOKOVANA	KON	ZAC	22	27	32	39	75	SI	R/C	N				N	N	R/C	N	Y		N	N
28	180	R110	EA13	7SA511	DIST.O:CAS T1B			22	27	32	39		TR	O	Y	O	Y	1	N	N	R	N	Y	Alarm 1 (Hupenbefehl)	N	N

Documentation structure: Standard
Source file: KO050722.ODA

Date	22.07.2005	VSZ KOSICE	SIEMENS AG ISAIOOLS	Substation control system 6MB
Drawn	LANG			Numerical protection device:
Appr.				Indications
Remarks	Date	Name Norm	Orig./Repl. 1/Repl. by	Table

T = /BE 70
+
-S104
Page

Proprietary data, company confidential. All rights reserved.
Confie a ltrte de secret d'entreprise. Tous droits reservs.
Comunicado como segredo empresarial. Reservados todos os direitos.
Confiado como secreto industrial. Nos reservamos todos los derechos.

The reproduction, transmission or use of this document or its contents is not permitted without expres written authority. Offenders will be liable for damages. All rights, including rights created by patent grant or registration of a utility model or design, are reserved.

Station:

Device: EA13 7SA511
Device type: 7SA511
Function type: 7SA511
Manufact.: SIEMENS

Packet number: 3
Version number: 0

Connection Device: EA13 EAG
Subrack: EA13 7SA511
Module:
Comm. processor:
Channel connection
UART: 2
MUX:

Function type	Info number	Section	Bay	Logical device	Lower limit	Value text	Column section	Column bay	Column logical device	Column information	Column value text	Indication type	Entry in event list	Entry in alarm list	Acknowledge	Display in indication area	Indication class	Entry in SML	Display in diagram	Archive	Operational indications	Protection indications	Command derivation	Tel ctrl FP/SC	Command output
28	183	R110	EA13	7SA511	DIST.O:CAS T1L		22	27	32	39		TR	O	Y	O	Y	1	N	N	R	N	Y	Alarm 1 (Hupenbefehl)	N	N
28	205	R110	EA13	7SA511	DIST.O:3F.VYP.IMP.		22	27	32	39		TR	O	Y	O	Y	1	N	N	R	N	Y	Alarm 1 (Hupenbefehl)	N	N
29	164	R110	EA13	7SA511	DIST.O:KYVANIE	KON ZAC	22	27	32	39	75	SI	R/C	N				N	N	R/C	N	Y		N	N
29	166	R110	EA13	7SA511	DIST.O:KYVAN.3F.VYP		22	27	32	39	0	TR	O	N				N	N	R	N	Y		N	N
40	81	R110	EA13	7SA511	OZ:AUTOMAT.VYPNUTA	KON ZAC	22	27	32	39	75	SI	R/C	N				N	N	R/C	N	Y		N	N
40	85	R110	EA13	7SA511	OZ:INT.BLOKOVANIE	KON ZAC	22	27	32	39	75	SI	R/C	N				N	N	R/C	N	Y		N	N
40	87	R110	EA13	7SA511	OZ:VYPINAC.NEPRIPR.	KON ZAC	22	27	32	39	75	SI	R/C	N				N	N	R/C	N	Y		N	N
40	101	R110	EA13	7SA511	OZ.AUTOM.CINNA	KON ZAC	22	27	32	39	78	SI	R/C	Y	R/C	Y	1	N	N	R/C	N	Y	Alarm 1 (Hupenbefehl)	N	N
40	113	R110	EA13	7SA511	OZ:1P.PAUZA CINNA	KON ZAC	22	27	32	39	78	SI	R/C	Y	R/C	Y	1	N	N	R/C	N	Y	Alarm 1 (Hupenbefehl)	N	N
40	163	R110	EA13	7SA511	OZ:KONECNE VYPNUTIE		22	27	32	39		TR	O	Y	O	Y	1	N	N	R	N	Y	Alarm 1 (Hupenbefehl)	N	N
61	61	R110	EA13	7SA511	NUDZ.GENER.POPUD	KON ZAC	22	27	32	39	78	SI	R/C	Y	R/C	Y	1	N	N	R/C	N	Y	Alarm 1 (Hupenbefehl)	N	N
61	62	R110	EA13	7SA511	NUDZ. POPUD V L1	KON ZAC	22	27	32	39	78	SI	R/C	Y	R/C	Y	1	N	N	R/C	N	Y	Alarm 1 (Hupenbefehl)	N	N
61	63	R110	EA13	7SA511	NUDZ. POPUD V L2	KON ZAC	22	27	32	39	78	SI	R/C	Y	R/C	Y	1	N	N	R/C	N	Y	Alarm 1 (Hupenbefehl)	N	N
61	64	R110	EA13	7SA511	NUDZ. POPUD V L3	KON ZAC	22	27	32	39	78	SI	R/C	Y	R/C	Y	1	N	N	R/C	N	Y	Alarm 1 (Hupenbefehl)	N	N
61	65	R110	EA13	7SA511	NUDZ. POPUD ZEM.S.	KON ZAC	22	27	32	39	78	SI	R/C	Y	R/C	Y	1	N	N	R/C	N	Y	Alarm 1 (Hupenbefehl)	N	N
61	121	R110	EA13	7SA511	NUDZ.CAS TI>>KONCIL		22	27	32	39		TR	O	Y	O	Y	1	N	N	R	N	Y	Alarm 1 (Hupenbefehl)	N	N
61	123	R110	EA13	7SA511	NUDZ.CAS TI>KONCIL		22	27	32	39		TR	O	Y	O	Y	1	N	N	R	N	Y	Alarm 1 (Hupenbefehl)	N	N
61	127	R110	EA13	7SA511	NUDZ.CAS TIE>KONCIL		22	27	32	39		TR	O	Y	O	Y	1	N	N	R	N	Y	Alarm 1 (Hupenbefehl)	N	N
61	142	R110	EA13	7SA511	NUDZ.1P.VYP.IMP.L1		22	27	32	39		TR	O	Y	O	Y	1	N	N	R	N	Y	Alarm 1 (Hupenbefehl)	N	N
61	143	R110	EA13	7SA511	NUDZ.1P.VYP.IMP.L2		22	27	32	39		TR	O	Y	O	Y	1	N	N	R	N	Y	Alarm 1 (Hupenbefehl)	N	N
61	144	R110	EA13	7SA511	NUDZ.1P.VYP.IMP.L3		22	27	32	39		TR	O	Y	O	Y	1	N	N	R	N	Y	Alarm 1 (Hupenbefehl)	N	N
61	145	R110	EA13	7SA511	NUDZ.3P.VYP.IMPULZ		22	27	32	39		TR	O	Y	O	Y	1	N	N	R	N	Y	Alarm 1 (Hupenbefehl)	N	N
135	81	R110	EA13	7SA511	OCHRANA PRIPRAVENA	KON ZAC	22	27	32	39	75	SI	R/C	N				N	N	R/C	N	Y		N	N
135	130	R110	EA13	7SA511	BUFER SIGN. PREPLNENY		22	27	32	39	0	TR	O	N				N	N	R	N	Y		N	N
135	131	R110	EA13	7SA511	STRATA SIGN. PRE LSA		22	27	32	39	0	TR	O	N				N	N	R	N	Y		N	N
135	166	R110	EA13	7SA511	PORUCHA V/V JEDN.C.1	KON ZAC	22	27	32	39	75	SI	R/C	N				N	N	R/C	N	Y		N	N
135	167	R110	EA13	7SA511	PORUCHA V/V JEDN.C.2	KON ZAC	22	27	32	39	75	SI	R/C	N				N	N	R/C	N	Y		N	N
135	231	R110	EA13	7SA511	PORUCHA NAPAJ.OCHR.	KON ZAC	22	27	32	39	78	SI	R/C	Y	R/C	Y	1	N	N	R/C	N	Y	Alarm 1 (Hupenbefehl)	N	N
150	166	R110	EA13	7SA511	SUM.VYP.IMP.VPRED		22	27	32	39		TR	O	Y	O	Y	1	N	N	R	N	Y	Alarm 1 (Hupenbefehl)	N	N
150	167	R110	EA13	7SA511	SUM.VYP.IMP.VZAD		22	27	32	39		TR	O	Y	O	Y	1	N	N	R	N	Y	Alarm 1 (Hupenbefehl)	N	N
150	171	R110	EA13	7SA511	VYPIN.PRUD. L1 I/In=		22	27	32	39	0	NV	O	Y	O	Y	1	N	N	R	N	Y	Alarm 1 (Hupenbefehl)	N	N
150	172	R110	EA13	7SA511	VYPIN.PRUD. L2 I/In=		22	27	32	39	0	NV	O	Y	O	Y	1	N	N	R	N	Y	Alarm 1 (Hupenbefehl)	N	N

Station:
Device EA13 7SA511
Device type: 7SA511
Function type: 7SA511
Manufact.: SIEMENS

Packet number: 3
Version number: 0

Connection Device: EA13 EAG
Subrack: EA13 7SA511
Module:
Comm. processor:
Channel connection
UART: 2
MUX:

Function type	Info number	Section	Bay	Logical device	Lower limit	Value text	Column section	Column bay	Column logical device	Column information	Column value text	Indication type	Entry in event list	Entry in alarm list	Acknowledge	Display in indication area	Indication class	Entry in SML	Display in diagram	Archive	Operational indications	Protection indications	Command derivation	Tel ctrl FP/SC	Command output
150	173	R110	EA13	7SA511	VYPIN.PRUD. L3 I/In=		22	27	32	39	0	NV	O	Y	O	Y	1	N	N	R	N	Y	Alarm 1 (Hupenbefehl)	N	N
150	211	R110	EA13	7SA511	RUCNE ZAP.VYPINAC		22	27	32	39	0	TR	O	N				N	N	R	N	Y		N	N
151	17	R110	EA13	7SA511	VYPOC.CHYB.REAKT.OHM		22	27	32	39	0	NV	O	Y	O	Y	1	N	N	R	N	Y	Alarm 1 (Hupenbefehl)	N	N
151	18	R110	EA13	7SA511	VYPOC.CHYB.REZIS.OHM		22	27	32	39	0	NV	O	Y	O	Y	1	N	N	R	N	Y	Alarm 1 (Hupenbefehl)	N	N
151	19	R110	EA13	7SA511	VYPOC.CHYB.VZDIALkm=		22	27	32	39	0	NV	O	Y	O	Y	1	N	N	R	N	Y	Alarm 1 (Hupenbefehl)	N	N
151	178	R110	EA13	7SA511	ZEMNI.SPOJ. NEDEF.	KON ZAC	22	27	32	39	75	SI	R/C	N				N	N	N				N	N
166	31	R110	EA13	7SA511	ZEMN. OCHR. VYNUTA	KON ZAC	22	27	32	39	75	SI	R/C	N				N	N	R/C	N	Y		N	N

Proprietary data, company confidential. All rights reserved.
Confie a titre de secret d'entreprise. Tous droits reservés.
Comunicado como segredo empresarial. Reservados todos os direitos.
Confiado como secreto industrial. Nos reservamos todos los derechos.

The reproduction, transmission or use of this document or its is not permitted without express written authority.
Offenders will be liable for damages. All rights, including rights created by patent grant or registration of a utility model or design, are reserved.

Documentation structur: Standard
Source file: KO050722.ODA

Date	22.07.2005	VSZ KOSICE	SIEMENS AG ISA TOOLS	Substation control system 6MB
Drawn	LANG			Numerical protection device:
Appr.				Indications
Norm		Orig./Repl. 1/Repl. by		Table

Remarks | Date | Name

T = /BE 72
+
-S104
Page

Station:
Device EA13 7SJ511
Device type: 7SJ511
Function type: 7SJ511
Manufact.: SIEMENS

Packet number: 3
Version number: 0

Connection Device: EA13 EAG
Subrack: EA13 7SJ511
Module:
Comm. processor:
Channel connection
UART: 2
MUX:

Function type	Info number	Section	Bay	Logical device	Lower limit	Value text	Column section	Column bay	Column logical device	Column information	Column value text	Indication type	Entry in event list	Entry in alarm list	Acknowledge	Display in indication area	Indication class	Entry in SML	Display in diagram	Archive	Operational indications	Protection indications
	19	R110	EA13	7SJ511	NASTAVENIE LED ZOBR.		22	27	32	39	0	TR	O	N				N	N	R	N	Y
	22	R110	EA13	7SJ511	PARAMETRIZACIA OCHRANY	KON ZAC	22	27	32	39	75	SI	R/C	N				N	N	R/C	N	Y
	27	R110	EA13	7SJ511	ANWENDERDEF. MELDUNG 1	KON ZAC	22	27	32	39	75	SI	N	N				N	N	N		
	84	R110	EA13	7SJ511	NADPR.OCHR.GEN.POPUD	KON ZAC	22	27	32	39	78	SI	R/C	Y	R/C	Y	1	N	N	R/C	N	Y
	90	R110	EA13	7SJ511	NADPR.OCHR.VYP.IMP		22	27	32	39		TR	O	Y	O	Y	1	N	N	R	N	Y
	91	R110	EA13	7SJ511	SKRAT.OCHR.VYP.IMP.		22	27	32	39		TR	O	Y	O	Y	1	N	N	R	N	Y
60	1	R110	EA13	7SJ511	NADPR.OCHR.BLOK.I>>	KON ZAC	22	27	32	39	75	SI	R/C	N				N	N	R/C	N	Y
60	2	R110	EA13	7SJ511	NADPR.OCHR.BLOK.I>	KON ZAC	22	27	32	39	75	SI	R/C	N				N	N	R/C	N	Y
60	46	R110	EA13	7SJ511	SKRAT.OCHR.POPUD L1	KON ZAC	22	27	32	39	78	SI	R/C	Y	R/C	Y	1	N	N	R/C	N	Y
60	47	R110	EA13	7SJ511	SKRAT.OCHR.POPUD L2	KON ZAC	22	27	32	39	78	SI	R/C	Y	R/C	Y	1	N	N	R/C	N	Y
60	48	R110	EA13	7SJ511	SKRAT.OCHR.POPUD L3	KON ZAC	22	27	32	39	78	SI	R/C	Y	R/C	Y	1	N	N	R/C	N	Y
60	49	R110	EA13	7SJ511	SKRAT.OCHR.CAS		22	27	32	39		TR	O	Y	O	Y	1	N	N	R	N	Y
60	50	R110	EA13	7SJ511	NADPR.OCHR.POPUD L1	KON ZAC	22	27	32	39	78	SI	R/C	Y	R/C	Y	1	N	N	R/C	N	Y
60	51	R110	EA13	7SJ511	NADPR.OCHR.POPUD L2	KON ZAC	22	27	32	39	78	SI	R/C	Y	R/C	Y	1	N	N	R/C	N	Y
60	52	R110	EA13	7SJ511	NADPR.OCHR.POPUD L3	KON ZAC	22	27	32	39	78	SI	R/C	Y	R/C	Y	1	N	N	R/C	N	Y
60	53	R110	EA13	7SJ511	NADPR.OCHR.CAS		22	27	32	39		TR	O	Y	O	Y	1	N	N	R	N	Y
135	81	R110	EA13	7SJ511	OCHRANA PRIPRAVENA	KON ZAC	22	27	32	39	75	SI	R/C	N				N	N	R/C	N	Y
135	130	R110	EA13	7SJ511	BUFER SIGN. PREPLNENY		22	27	32	39	0	TR	O	N				N	N	R	N	Y
135	131	R110	EA13	7SJ511	STRATA SIGN. PRE LSA		22	27	32	39	0	TR	O	N				N	N	R	N	Y
135	231	R110	EA13	7SJ511	PORUCHA NAPAJ.OCHR.	KON ZAC	22	27	32	39	78	SI	R/C	Y	R/C	Y	1	N	N	R/C	N	Y
150	151	R110	EA13	7SJ511	SUM.POSOBENIE OCHR.		22	27	32	39	0	TR	O	Y	O	Y	1	N	N	R	N	Y
150	152	R110	EA13	7SJ511	SUM.ZRUS.POSOB.OCHR.		22	27	32	39	0	TR	O	Y	O	Y	1	N	N	R	N	Y
150	161	R110	EA13	7SJ511	SUM.GEN.VYP.IMPULZ		22	27	32	39	0	TR	O	Y	O	Y	1	N	N	R	N	Y
150	171	R110	EA13	7SJ511	VYPIN.PRUD. L1 I/In=		22	27	32	39	0	NV	O	Y	O	Y	1	N	N	R	N	Y
150	172	R110	EA13	7SJ511	VYPIN.PRUD. L2 I/In=		22	27	32	39	0	NV	O	Y	O	Y	1	N	N	R	N	Y
150	173	R110	EA13	7SJ511	VYPIN.PRUD. L3 I/In=		22	27	32	39	0	NV	O	Y	O	Y	1	N	N	R	N	Y
167	11	R110	EA13	7SJ511	O.PRETAZ. VYPNUTA	KON ZAC	22	27	32	39	78	SI	N	N				N	N	N		
167	12	R110	EA13	7SJ511	O.PRETAZ. BLOKOVANA	KON ZAC	22	27	32	39	78	SI	N	N				N	N	N		
167	15	R110	EA13	7SJ511	O.PRETAZ:PRUD.VYSTR	KON ZAC	22	27	32	39	78	SI	N	N				N	N	N		
167	16	R110	EA13	7SJ511	O.PRETAZ. TEPEL.VYSTR	KON ZAC	22	27	32	39	78	SI	N	N				N	N	N		
167	21	R110	EA13	7SJ511	O.PRETAZ. VYP.POVEL		22	27	32	39		SI	N	N				N	N	N		

Proprietary data, company confidential. All rights reserved
Confia a tifre de secret d'entreprise. Tous droits reservs.
Comunicado como segredo empresarial. Reservados todos os direitos
Confiado como secreto industrial. Nos reservamos todos los derechos
The reproduction, transmission or use of this document or its is not permitted without expres written authority.
Offenders will be liable for damages. All rights, including rights created by patent grant or registration of a utility model or design, are reserved

Documentation structur: Standard
Source file: KO050722.ODA

Rev.	Remarks	Date	Name	Norm

Date 22.07.2005
Drawn LANG
Appr.
Orig./Repl. 1/Repl. by

VSZ KOSICE

SIEMENS AG
ISATOOLS

Substation control system 6MB
Numerical protection device:
Indications
Table

T = /BE 73
+
-S104
Page 73

Station:

Device EA13 7SJ511
Device type: 7SJ511
Function type: 7SJ511
Manufact.: SIEMENS

Packet number: 3
Version number: 0

Connection Device: EA13 EAG
Subrack: EA13 7SJ511
Module:
Comm. processor:
Channel connection
UART: 2
MUX:

Function type	Info number	Command derivation	Indication derivation	Tel ctrl FP/SC	Command output
	19			N	N
	22			N	N
	27		7SJ511 ROZPENIE OCHRANAMIE	N	N
	84	Alarm 1 (Hupenbefehl)		N	N
	90	Alarm 1 (Hupenbefehl)		N	N
	91	Alarm 1 (Hupenbefehl)		N	N
60	1			N	N
60	2			N	N
60	46	Alarm 1 (Hupenbefehl)		N	N
60	47	Alarm 1 (Hupenbefehl)		N	N
60	48	Alarm 1 (Hupenbefehl)		N	N
60	49	Alarm 1 (Hupenbefehl)		N	N
60	50	Alarm 1 (Hupenbefehl)		N	N
60	51	Alarm 1 (Hupenbefehl)		N	N
60	52	Alarm 1 (Hupenbefehl)		N	N
60	53	Alarm 1 (Hupenbefehl)		N	N
135	81			N	N
135	130			N	N
135	131			N	N
135	231	Alarm 1 (Hupenbefehl)		N	N
150	151	Alarm 1 (Hupenbefehl)		N	N
150	152	Alarm 1 (Hupenbefehl)		N	N
150	161	Alarm 1 (Hupenbefehl)		N	N
150	171	Alarm 1 (Hupenbefehl)		N	N
150	172	Alarm 1 (Hupenbefehl)		N	N
150	173	Alarm 1 (Hupenbefehl)		N	N
167	11			N	N
167	12			N	N
167	15			N	N
167	16			N	N
167	21			N	N

Proprietary data, company confidential. All rights reserved.
Confie a titre de secret d'entreprise. Tous droits reservés.
Comunicado como segredo empresarial. Reservados todos os direitos.
Confiado como secreto industrial. Nos reservamos todos los derechos.

The reproduction, transmission or use of this document or its is not permitted without express written authority. Offenders will be liable for damages. All rights, including rights created by patent grant or registration of a utility model or design, are reserved.

Documentation structur: Standard
Source file: KO050722.ODA

Rev	Remarks	Date	Name	Norm

Date 22.07.2005
Drawn LANG
Appr.

VSZ
KOSICE

Orig./Repl. 1/Repl. by

SIEMENS AG
SAIOOLS

Substation control system 6MB
Numerical protection device:
Indications
Table

T = /BE 74
+
-S104
Page 74

Station:

Device: EA15 7SA511
Device type: 7SA511
Function type: 7SA511
Manufact.: SIEMENS

Packet number: 3
Version number: 0

Connection Device: EA15 EAG
Subrack: EA15 7SA511
Module:
Comm. processor:
Channel connection
UART: 2
MUX:

Function type	Info number	Section	Bay	Logical device	Lower limit	Value text	Column section	Column bay	Column logical device	Column information	Column value text	Indication type	Entry in event list	Entry in alarm list	Acknowledge	Display in indication area	Indication class	Entry in SML	Display in diagram	Archive	Operational indications	Protection indications	Command derivation	FP/SC	Command output
		R110	EA15	7SA511	DIST.O:GEN.POPUD	KON ZAC	22	27	32	39	78	SI	R/C	Y	R/C	Y	1	N	N	R/C	N	Y	Alarm 1 (Hupenbefehl)	N	N
	19	R110	EA15	7SA511	NASTAVENIE LED ZOBR.		22	27	32	39	0	TR	O	N				N	N	R	N	Y		N	N
	22	R110	EA15	7SA511	PARAMETRIZACIA OCHRANY	KON ZAC	22	27	32	39	75	SI	R/C	N				N	N	R/C	N	Y		N	N
	23	R110	EA15	7SA511	PARAMETRIZ.AKT.SADA A	KON ZAC	22	27	32	39	75	SI	R/C	N				N	N	R/C	N	Y		N	N
	24	R110	EA15	7SA511	PARAMETRIZ.AKT.SADA B	KON ZAC	22	27	32	39	75	SI	R/C	N				N	N	R/C	N	Y		N	N
	25	R110	EA15	7SA511	PARAMETRIZ.AKT.SADA C	KON ZAC	22	27	32	39	75	SI	R/C	N				N	N	R/C	N	Y		N	N
	26	R110	EA15	7SA511	PARAMETRIZ.AKT.SADA D	KON ZAC	22	27	32	39	75	SI	R/C	N				N	N	R/C	N	Y		N	N
	38	R110	EA15	7SA511	ISTIC PTN VYPNUTY	KON ZAC	22	27	32	39	75	SI	R/C	N				N	N	R/C	N	Y		N	N
	48	R110	EA15	7SA511	ZEMNI.SPOJ. V L1	KON ZAC	22	27	32	39	75	SI	R/C	N				N	N	R/C	N	Y		N	N
	49	R110	EA15	7SA511	ZEMNI.SPOJ. V L2	KON ZAC	22	27	32	39	75	SI	R/C	N				N	N	R/C	N	Y		N	N
	50	R110	EA15	7SA511	ZEMNI.SPOJ. V L3	KON ZAC	22	27	32	39	75	SI	R/C	N				N	N	R/C	N	Y		N	N
	51	R110	EA15	7SA511	ZEMNI.SPOJ. VPRED	KON ZAC	22	27	32	39	75	SI	R/C	N				N	N	R/C	N	Y		N	N
	52	R110	EA15	7SA511	ZEMNI.SPOJ. VZAD	KON ZAC	22	27	32	39	75	SI	R/C	N				N	N	R/C	N	Y		N	N
	64	R110	EA15	7SA511	DIST.O:POPUD V L1	KON ZAC	22	27	32	39	78	SI	R/C	Y	R/C	Y	1	N	N	R/C	N	Y	Alarm 1 (Hupenbefehl)	N	N
	65	R110	EA15	7SA511	DIST.O:POPUD V L2	KON ZAC	22	27	32	39	78	SI	R/C	Y	R/C	Y	1	N	N	R/C	N	Y	Alarm 1 (Hupenbefehl)	N	N
	66	R110	EA15	7SA511	DIST.O:POPUD V L3	KON ZAC	22	27	32	39	78	SI	R/C	Y	R/C	Y	1	N	N	R/C	N	Y	Alarm 1 (Hupenbefehl)	N	N
	67	R110	EA15	7SA511	DIST.O:POPUD ZEM.	KON ZAC	22	27	32	39	78	SI	R/C	Y	R/C	Y	1	N	N	R/C	N	Y	Alarm 1 (Hupenbefehl)	N	N
	69	R110	EA15	7SA511	DIST.O:1F.VYP.IMP.L1		22	27	32	39		TR	O	Y	O	Y	1	N	N	R	N	Y	Alarm 1 (Hupenbefehl)	N	N
	70	R110	EA15	7SA511	DIST.O:1F.VYP.IMP.L2		22	27	32	39		TR	O	Y	O	Y	1	N	N	R	N	Y	Alarm 1 (Hupenbefehl)	N	N
	71	R110	EA15	7SA511	DIST.O:1F.VYP.IMP.L3		22	27	32	39		TR	O	Y	O	Y	1	N	N	R	N	Y	Alarm 1 (Hupenbefehl)	N	N
	72	R110	EA15	7SA511	NUDZ.GEN.VYP.IMPULZ		22	27	32	39		TR	O	Y	O	Y	1	N	N	R	N	Y	Alarm 1 (Hupenbefehl)	N	N
	74	R110	EA15	7SA511	DIST.O:POPUD VPRED		22	27	32	39		TR	O	Y	O	Y	1	N	N	R	N	Y	Alarm 1 (Hupenbefehl)	N	N
	75	R110	EA15	7SA511	DIST.O:POPUD VZAD		22	27	32	39		TR	O	Y	O	Y	1	N	N	R	N	Y	Alarm 1 (Hupenbefehl)	N	N
	78	R110	EA15	7SA511	DIST.O:CAS T1		22	27	32	39		TR	O	Y	O	Y	1	N	N	R	N	Y	Alarm 1 (Hupenbefehl)	N	N
	79	R110	EA15	7SA511	DIST.O:CAS T2		22	27	32	39		TR	O	Y	O	Y	1	N	N	R	N	Y	Alarm 1 (Hupenbefehl)	N	N
	80	R110	EA15	7SA511	DIST.O:CAS T3		22	27	32	39		TR	O	Y	O	Y	1	N	N	R	N	Y	Alarm 1 (Hupenbefehl)	N	N
	81	R110	EA15	7SA511	DIST.O:CAS T4		22	27	32	39		TR	O	Y	O	Y	1	N	N	R	N	Y	Alarm 1 (Hupenbefehl)	N	N
	82	R110	EA15	7SA511	DIST.O:CAS T5		22	27	32	39		TR	O	Y	O	Y	1	N	N	R	N	Y	Alarm 1 (Hupenbefehl)	N	N
	128	R110	EA15	7SA511	OZ:ZAPINACI IMPULZ		22	27	32	39	0	TR	O	Y	O	Y	1	N	N	R	N	Y	Alarm 1 (Hupenbefehl)	N	N
28	51	R110	EA15	7SA511	DIST.O:VYPNUTA	KON ZAC	22	27	32	39	75	SI	R/C	N				N	N	R/C	N	Y		N	N
28	52	R110	EA15	7SA511	DIST.O:BLOKOVANA	KON ZAC	22	27	32	39	75	SI	R/C	N				N	N	R/C	N	Y		N	N
28	180	R110	EA15	7SA511	DIST.O:CAS T1B		22	27	32	39		TR	O	Y	O	Y	1	N	N	R	N	Y	Alarm 1 (Hupenbefehl)	N	N

Proprietary data, company confidential. All rights reserved
Confiado a tire de secret d'entreprise. Tous droits réservés
Comunicado como segredo empresarial. Reservados todos os direitos.
Confiado como secreto industrial. Nos reservamos todos los derechos.
The reproduction, transmission or use of this document or its contents is not permitted without express written authority. Offenders will be liable for damages. All rights, including rights created by patent grant or registration of a utility model or design, are reserved

Documentation structure: Standard
Source file: KO050722.ODA

Date 22.07.2005
Drawn LANG
Appr.

VSZ KOSICE

SIEMENS AG
ISAOOLS

Substation control system 6MB
Numerical protection device:
Indications
Table

T = /BE 75
+

-S104

Rev. | Remarks | Date | Name Norm | Orig./Repl. 1/Repl. by

Proprietary data, company confidential. All rights reserved
Confie a titre de secret dentreprise. Tous droits reservs.
Comunicado como segredo empresarial Reservados todos os direitos.
Confiado como secreto industrial Nos reservamos todos los derechos
The reproduction, transmission or use of this document or its
is not permitted without expres written authority.
Offenders will be liable for damages. All rights, including rights
created by patent grant or registration of a utility model or design, are reseved

Station:
Device EA15 7SA511
Device type: 7SA511
Function type: 7SA511
Manufact.: SIEMENS

Packet number: 3
Version number: 0

Connection Device: EA15 EAG
Subrack: EA15 7SA511
Module:
Comm. processor:
Channel connection
UART: 2
MUX:

Function type	Info number	Section	Bay	Logical device	Lower limit	Value text	Column section	Column bay	Column logical device	Column information	Column value text	Indication type	Entry in event list	Entry in alarm list	Acknowledge	Display in indication area	Indication class	Entry in SML	Display in diagram	Archive	Operational indications	Protection indications	Command derivation	Tel ctrl FP/SC	Command output
28	183	R110	EA15	7SA511	DIST.O:CAS T1L		22	27	32	39		TR	O	Y	O	Y	1	N	N	R	N	Y	Alarm 1 (Hupenbefehl)	N	N
28	205	R110	EA15	7SA511	DIST.O:3F.VYP.IMP.		22	27	32	39		TR	O	Y	O	Y	1	N	N	R	N	Y	Alarm 1 (Hupenbefehl)	N	N
29	164	R110	EA15	7SA511	DIST.O:KYVANIE	KON ZAC	22	27	32	39	75	SI	R/C	N				N	N	R/C	N	Y		N	N
29	166	R110	EA15	7SA511	DIST.O:KYVAN.3F.VYP		22	27	32	39	0	TR	O	N				N	N	R	N	Y		N	N
40	81	R110	EA15	7SA511	OZ:AUTOMAT.VYPNUTA	KON ZAC	22	27	32	39	75	SI	R/C	N				N	N	R/C	N	Y		N	N
40	85	R110	EA15	7SA511	OZ:INT.BLOKOVANIE	KON ZAC	22	27	32	39	75	SI	R/C	N				N	N	R/C	N	Y		N	N
40	87	R110	EA15	7SA511	OZ:VYPINAC.NEPRIPR.	KON ZAC	22	27	32	39	75	SI	R/C	N				N	N	R/C	N	Y		N	N
40	101	R110	EA15	7SA511	OZ.AUTOM.CINNA	KON ZAC	22	27	32	39	78	SI	R/C	Y	R/C	Y	1	N	N	R/C	N	Y	Alarm 1 (Hupenbefehl)	N	N
40	113	R110	EA15	7SA511	OZ:1P.PAUZA CINNA	KON ZAC	22	27	32	39	78	SI	R/C	Y	R/C	Y	1	N	N	R/C	N	Y	Alarm 1 (Hupenbefehl)	N	N
40	163	R110	EA15	7SA511	OZ:KONECNE VYPNUTIE		22	27	32	39		TR	O	Y	O	Y	1	N	N	R	N	Y	Alarm 1 (Hupenbefehl)	N	N
61	61	R110	EA15	7SA511	NUDZ.GENER.POPUD	KON ZAC	22	27	32	39	78	SI	R/C	Y	R/C	Y	1	N	N	R/C	N	Y	Alarm 1 (Hupenbefehl)	N	N
61	62	R110	EA15	7SA511	NUDZ. POPUD V L1	KON ZAC	22	27	32	39	78	SI	R/C	Y	R/C	Y	1	N	N	R/C	N	Y	Alarm 1 (Hupenbefehl)	N	N
61	63	R110	EA15	7SA511	NUDZ. POPUD V L2	KON ZAC	22	27	32	39	78	SI	R/C	Y	R/C	Y	1	N	N	R/C	N	Y	Alarm 1 (Hupenbefehl)	N	N
61	64	R110	EA15	7SA511	NUDZ. POPUD V L3	KON ZAC	22	27	32	39	78	SI	R/C	Y	R/C	Y	1	N	N	R/C	N	Y	Alarm 1 (Hupenbefehl)	N	N
61	65	R110	EA15	7SA511	NUDZ. POPUD ZEM.S.	KON ZAC	22	27	32	39	78	SI	R/C	Y	R/C	Y	1	N	N	R/C	N	Y	Alarm 1 (Hupenbefehl)	N	N
61	121	R110	EA15	7SA511	NUDZ.CAS TI>>KONCIL		22	27	32	39		TR	O	Y	O	Y	1	N	N	R	N	Y	Alarm 1 (Hupenbefehl)	N	N
61	123	R110	EA15	7SA511	NUDZ.CAS TI>KONCIL		22	27	32	39		TR	O	Y	O	Y	1	N	N	R	N	Y	Alarm 1 (Hupenbefehl)	N	N
61	127	R110	EA15	7SA511	NUDZ.CAS TIE>KONCIL		22	27	32	39		TR	O	Y	O	Y	1	N	N	R	N	Y	Alarm 1 (Hupenbefehl)	N	N
61	142	R110	EA15	7SA511	NUDZ.1P.VYP.IMP.L1		22	27	32	39		TR	O	Y	O	Y	1	N	N	R	N	Y	Alarm 1 (Hupenbefehl)	N	N
61	143	R110	EA15	7SA511	NUDZ.1P.VYP.IMP.L2		22	27	32	39		TR	O	Y	O	Y	1	N	N	R	N	Y	Alarm 1 (Hupenbefehl)	N	N
61	144	R110	EA15	7SA511	NUDZ.1P.VYP.IMP.L3		22	27	32	39		TR	O	Y	O	Y	1	N	N	R	N	Y	Alarm 1 (Hupenbefehl)	N	N
61	145	R110	EA15	7SA511	NUDZ.3P.VYP.IMPULZ		22	27	32	39		TR	O	Y	O	Y	1	N	N	R	N	Y	Alarm 1 (Hupenbefehl)	N	N
135	81	R110	EA15	7SA511	OCHRANA PRIPRAVENA	KON ZAC	22	27	32	39	75	SI	R/C	N				N	N	R/C	N	Y		N	N
135	130	R110	EA15	7SA511	BUFER SIGN. PREPLNENY		22	27	32	39	0	TR	O	N				N	N	R	N	Y		N	N
135	131	R110	EA15	7SA511	STRATA SIGN. PRE LSA		22	27	32	39	0	TR	O	N				N	N	R	N	Y		N	N
135	166	R110	EA15	7SA511	PORUCHA V/V JEDN.C.1	KON ZAC	22	27	32	39	75	SI	R/C	N				N	N	R/C	N	Y		N	N
135	167	R110	EA15	7SA511	PORUCHA V/V JEDN.C.2	KON ZAC	22	27	32	39	75	SI	R/C	N				N	N	R/C	N	Y		N	N
135	231	R110	EA15	7SA511	PORUCHA NAPAJ.OCHR.	KON ZAC	22	27	32	39	78	SI	R/C	Y	R/C	Y	1	N	N	R/C	N	Y	Alarm 1 (Hupenbefehl)	N	N
150	166	R110	EA15	7SA511	SUM.VYP.IMP.VPRED		22	27	32	39		TR	O	Y	O	Y	1	N	N	R	N	Y	Alarm 1 (Hupenbefehl)	N	N
150	167	R110	EA15	7SA511	SUM.VYP.IMP.VZAD		22	27	32	39		TR	O	Y	O	Y	1	N	N	R	N	Y	Alarm 1 (Hupenbefehl)	N	N
150	171	R110	EA15	7SA511	VYPIN.PRUD. L1 I/In=		22	27	32	39	0	NV	O	Y	O	Y	1	N	N	R	N	Y	Alarm 1 (Hupenbefehl)	N	N
150	172	R110	EA15	7SA511	VYPIN.PRUD. L2 I/In=		22	27	32	39	0	NV	O	Y	O	Y	1	N	N	R	N	Y	Alarm 1 (Hupenbefehl)	N	N

Documentation structur: Standard
Source file: KO050722.ODA

Date 22.07.2005
Drawn LANG
Appr.
Norm
Remarks | Date | Name | Orig./Repl. 1/Repl. by

VSZ
KOSICE

SIEMENS AG
ISATOOLS

Substation control system 6MB
Numerical protection device:
Indications
Table

T = /BE 76
+
-S104
Page

Station:

Device EA15 7SA511
Device type: 7SA511
Function type: 7SA511
Manufact.: SIEMENS

Packet number: 3
Version number: 0

Connection Device: EA15 EAG
Subrack: EA15 7SA511
Module:
Comm. processor:
Channel connection
UART: 2
MUX:

Function type	Info number	Section	Bay	Logical device	Lower limit	Value text	Column section	Column bay	Column logical device	Column information	Column value text	Indication type	Entry in event list	Entry in alarm list	Acknowledge	Display in indication area	Indication class	Entry in SML	Display in diagram	Archive	Operational indications	Protection indications	Command derivation	Tel ctrl FP/SC	Command output
150	173	R110	EA15	7SA511	VYPIN.PRUD. L3 I/In=		22	27	32	39	0	NV	O	Y	O	Y	1	N	N	R	N	Y	Alarm 1 (Hupenbefehl)	N	N
150	211	R110	EA15	7SA511	RUCNE ZAP.VYPINAC		22	27	32	39	0	TR	O	N				N	N	R	N	Y		N	N
151	17	R110	EA15	7SA511	VYPOC.CHYB.REAKT.OHM		22	27	32	39	0	NV	O	Y	O	Y	1	N	N	R	N	Y	Alarm 1 (Hupenbefehl)	N	N
151	18	R110	EA15	7SA511	VYPOC.CHYB.REZIS.OHM		22	27	32	39	0	NV	O	Y	O	Y	1	N	N	R	N	Y	Alarm 1 (Hupenbefehl)	N	N
151	19	R110	EA15	7SA511	VYPOC.CHYB.VZDIALkm=		22	27	32	39	0	NV	O	Y	O	Y	1	N	N	R	N	Y	Alarm 1 (Hupenbefehl)	N	N
151	178	R110	EA15	7SA511	ZEMNI.SPOJ. NEDEF.	KON ZAC	22	27	32	39	75	SI	R/C	N				N	N	N				N	N
166	31	R110	EA15	7SA511	ZEMN. OCHR. VYNUTA	KON ZAC	22	27	32	39	75	SI	R/C	N				N	N	R/C	N	Y		N	N

Proprietary data, company confidential. All rights reserved
Confie a titre de secret d'entreprise. Tous droits réservés.
Comunicado como segredo empresarial. Reservados todos os direitos.
Confiado como secreto industrial. Nos reservamos todos los derechos.

The reproduction, transmission or use of this document or its is not permitted without express written authority.
Offenders will be liable for damages. All rights, including rights created by patent grant or registration of a utility model or design, are reserved.

Documentation structur: Standard
Source file: KO050722.ODA

Rev.	Remarks	Date	Name	Date	22.07.2005	VSZ KOSICE	SIEMENS AG ISA TOOLS	Substation control system 6MB
				Drawn	LANG			Numerical protection device:
				Appr.				Indications
				Norm		Orig./Repl. 1/Repl. by		Table

T = /BE 77
+
-S104
Page 77

Proprietary data, company confidential. All rights reserved
Confiado a tire de secret d'entreprise. Tous droits réservés
Comunicado como secreto empresarial. Reservados todos os direitos
Confiado como secreto industrial. Nos reservamos todos los derechos
The reproduction, transmission or use of this document or its contents is not permitted without express written authority. Offenders will be liable for damages. All rights, including rights created by patent grant or registration of a utility model or design, are reserved

Station:

Device: EA15 7SJ511
Device type: 7SJ511
Function type: 7SJ511
Manufact.: SIEMENS

Packet number: 3
Version number: 0

Connection Device: EA15 EAG
Subrack: EA15 7SJ511
Module:
Comm. processor:
Channel connection
UART: 2
MUX:

Function type	Info number	Section	Bay	Logical device	Lower limit	Value text	Column section	Column bay	Column logical device	Column information	Column value text	Indication type	Entry in event list	Entry in alarm list	Acknowledge	Display in indication area	Indication class	Entry in SML	Display in diagram	Archive	Operational indications	Protection indications
	19	R110	EA15	7SJ511	NASTAVENIE LED ZOBR.		22	27	32	39	0	TR	O	N				N	N	R	N	Y
	22	R110	EA15	7SJ511	PARAMETRIZACIA OCHRANY	KON ZAC	22	27	32	39	75	SI	R/C	N				N	N	R/C	N	Y
	27	R110	EA15	7SJ511	ANWENDERDEF. MELDUNG 1	KON ZAC	22	27	32	39	75	SI	N	N				N	N	N		
	84	R110	EA15	7SJ511	NADPR.OCHR.GEN.POPUD	KON ZAC	22	27	32	39	78	SI	R/C	Y	R/C	Y	1	N	N	R/C	N	Y
	90	R110	EA15	7SJ511	NADPR.OCHR.VYP.IMP		22	27	32	39		TR	O	Y	O	Y	1	N	N	R	N	Y
	91	R110	EA15	7SJ511	SKRAT.OCHR.VYP.IMP.		22	27	32	39		TR	O	Y	O	Y	1	N	N	R	N	Y
60	1	R110	EA15	7SJ511	NADPR.OCHR.BLOK.I>>	KON ZAC	22	27	32	39	75	SI	R/C	N				N	N	R/C	N	Y
60	2	R110	EA15	7SJ511	NADPR.OCHR.BLOK.I>	KON ZAC	22	27	32	39	75	SI	R/C	N				N	N	R/C	N	Y
60	46	R110	EA15	7SJ511	SKRAT.OCHR.POPUD L1	KON ZAC	22	27	32	39	78	SI	R/C	Y	R/C	Y	1	N	N	R/C	N	Y
60	47	R110	EA15	7SJ511	SKRAT.OCHR.POPUD L2	KON ZAC	22	27	32	39	78	SI	R/C	Y	R/C	Y	1	N	N	R/C	N	Y
60	48	R110	EA15	7SJ511	SKRAT.OCHR.POPUD L3	KON ZAC	22	27	32	39	78	SI	R/C	Y	R/C	Y	1	N	N	R/C	N	Y
60	49	R110	EA15	7SJ511	SKRAT.OCHR.CAS		22	27	32	39		TR	O	Y	O	Y	1	N	N	R	N	Y
60	50	R110	EA15	7SJ511	NADPR.OCHR.POPUD L1	KON ZAC	22	27	32	39	78	SI	R/C	Y	R/C	Y	1	N	N	R/C	N	Y
60	51	R110	EA15	7SJ511	NADPR.OCHR.POPUD L2	KON ZAC	22	27	32	39	78	SI	R/C	Y	R/C	Y	1	N	N	R/C	N	Y
60	52	R110	EA15	7SJ511	NADPR.OCHR.POPUD L3	KON ZAC	22	27	32	39	78	SI	R/C	Y	R/C	Y	1	N	N	R/C	N	Y
60	53	R110	EA15	7SJ511	NADPR.OCHR.CAS		22	27	32	39		TR	O	Y	O	Y	1	N	N	R	N	Y
135	81	R110	EA15	7SJ511	OCHRANA PRIPRAVENA	KON ZAC	22	27	32	39	75	SI	R/C	N				N	N	R/C	N	Y
135	130	R110	EA15	7SJ511	BUFER SIGN. PREPLNENY		22	27	32	39	0	TR	O	N				N	N	R	N	Y
135	131	R110	EA15	7SJ511	STRATA SIGN. PRE LSA		22	27	32	39	0	TR	O	N				N	N	R	N	Y
135	231	R110	EA15	7SJ511	PORUCHA NAPAJ.OCHR.	KON ZAC	22	27	32	39	78	SI	R/C	Y	R/C	Y	1	N	N	R/C	N	Y
150	151	R110	EA15	7SJ511	SUM.POSOBENIE OCHR.		22	27	32	39	0	TR	O	Y	O	Y	1	N	N	R	N	Y
150	152	R110	EA15	7SJ511	SUM.ZRUS.POSOB.OCHR.		22	27	32	39	0	TR	O	Y	O	Y	1	N	N	R	N	Y
150	161	R110	EA15	7SJ511	SUM.GEN.VYP.IMPULZ		22	27	32	39	0	TR	O	Y	O	Y	1	N	N	R	N	Y
150	171	R110	EA15	7SJ511	VYPIN.PRUD. L1 I/In=		22	27	32	39	0	NV	O	Y	O	Y	1	N	N	R	N	Y
150	172	R110	EA15	7SJ511	VYPIN.PRUD. L2 I/In=		22	27	32	39	0	NV	O	Y	O	Y	1	N	N	R	N	Y
150	173	R110	EA15	7SJ511	VYPIN.PRUD. L3 I/In=		22	27	32	39	0	NV	O	Y	O	Y	1	N	N	R	N	Y
167	11	R110	EA15	7SJ511	O.PRETAZ. VYPNUTA	KON ZAC	22	27	32	39	78	SI	N	N				N	N	N		
167	12	R110	EA15	7SJ511	O.PRETAZ. BLOKOVANA	KON ZAC	22	27	32	39	78	SI	N	N				N	N	N		
167	15	R110	EA15	7SJ511	O.PRETAZ:PRUD.VYSTR	KON ZAC	22	27	32	39	78	SI	N	N				N	N	N		
167	16	R110	EA15	7SJ511	O.PRETAZ. TEPEL.VYSTR	KON ZAC	22	27	32	39	78	SI	N	N				N	N	N		
167	21	R110	EA15	7SJ511	O.PRETAZ. VYP.POVEL		22	27	32	39		SI	N	N				N	N	N		

Documentation structur: Standard
Source file: KO050722.ODA

Date 22.07.2005
Drawn LANG
Appr.
Remarks | Date | Name Norm | Orig./Repl. 1/Repl. by

VSZ KOSICE

SIEMENS AG
ISATOOLS

Substation control system 6MB
Numerical protection device:
Indications
Table

T = /BE 78
+
-S104
Page

Proprietary data, company confidential. All rights reserved
Confidential data secret of enterprise. Todos os direitos reservados
Comunicado como secreto do empresa! Reservados todos os direitos
Comunicado como secreto industrial Nos reservamos todos los derechos
The reproduction, transmission or use of this document or its contents is not permitted without expres written authority.
Offenders will be liable for damages. All rights, including rights created by patent grant or registration of a utility model or design, are reserved

Station:
Device EA15 7SJ511
Device type: 7SJ511
Function type: 7SJ511
Manufact.: SIEMENS

Packet number: 3
Version number: 0

Connection Device: EA15 EAG
Subrack: EA15 7SJ511
Module:
Comm. processor:
Channel connection
UART: 2
MUX:

Function type	Info number	Command derivation	Indication derivation	Tel ctrl FP/SC	Command output
	19			N	N
	22			N	N
	27		7SJ511 ROZPENIE OCHRANAMIE	N	N
	84	Alarm 1 (Hupenbefehl)		N	N
	90	Alarm 1 (Hupenbefehl)		N	N
	91	Alarm 1 (Hupenbefehl)		N	N
60	1			N	N
60	2			N	N
60	46	Alarm 1 (Hupenbefehl)		N	N
60	47	Alarm 1 (Hupenbefehl)		N	N
60	48	Alarm 1 (Hupenbefehl)		N	N
60	49	Alarm 1 (Hupenbefehl)		N	N
60	50	Alarm 1 (Hupenbefehl)		N	N
60	51	Alarm 1 (Hupenbefehl)		N	N
60	52	Alarm 1 (Hupenbefehl)		N	N
60	53	Alarm 1 (Hupenbefehl)		N	N
135	81			N	N
135	130			N	N
135	131			N	N
135	231	Alarm 1 (Hupenbefehl)		N	N
150	151	Alarm 1 (Hupenbefehl)		N	N
150	152	Alarm 1 (Hupenbefehl)		N	N
150	161	Alarm 1 (Hupenbefehl)		N	N
150	171	Alarm 1 (Hupenbefehl)		N	N
150	172	Alarm 1 (Hupenbefehl)		N	N
150	173	Alarm 1 (Hupenbefehl)		N	N
167	11			N	N
167	12			N	N
167	15			N	N
167	16			N	N
167	21			N	N

Documentation structur: Standard
Source file: KO050722.ODA

Rev.	Remarks	Date	Name Norm	Date 22.07.2005	Drawn LANG	Appr.	Orig./Repl. 1/Repl. by

VSZ KOSICE

SIEMENS AG
ISATOOLS

Substation control system 6MB
Numerical protection device:
Indications
Table

T = /BE 79
+
-S104
Page 79

Proprietary data, company confidential. All rights reserved.
Confiaa a tire de secret d'entreprise. Tous droits r.ser.v.s.
Comunicado como segredo empresarial. Reservados todos os direitos.
Confiado como secreto industrial. Nos reservamos todos los derechos.

The reproduction, transmission or use of this document or its contents is not permitted without expres written authority.
Offenders will be liable for damages. All rights, including rights created by patent grant or registration of a utility model or design, are reserved.

Station:

Device: EA17 7SD502
Device type: 7SD502/503
Function type: 7SD502/503
Manufact.: SIEMENS

Packet number: 3
Version number: 0

Connection Device: EA17 EAG
Subrack: EA17 7SD502
Module:
Comm. processor:
Channel connection
UART: 2
MUX:

Function type	Info number	Section	Bay	Logical device	Lower limit	Value text	Column section	Column bay	Column logical device	Column information	Column value text	Indication type	Entry in event list	Entry in alarm list	Acknowledge	Display in indication area	Indication class	Entry in SML	Display in diagram	Archive	Operational indications	Protection indications	Command derivation	Tel ctrl FP/SC	Command output
	19	R110	EA17	7SD502	NASTAVENIE LED ZOBR.		22	27	32	39	0	TR	O	N				N	N	R	N	Y		N	N
	22	R110	EA17	7SD502	PARAMETRIZACIA OCHRANY	KON ZAC	22	27	32	39	75	SI	R/C	N				N	N	R/C	N	Y		N	N
	23	R110	EA17	7SD502	PARAMETRIZ.AKT.SADA A	KON ZAC	22	27	32	39	75	SI	R/C	N				N	N	R/C	N	Y		N	N
	24	R110	EA17	7SD502	PARAMETRIZ.AKT.SADA B	KON ZAC	22	27	32	39	75	SI	R/C	N				N	N	R/C	N	Y		N	N
	25	R110	EA17	7SD502	PARAMETRIZ.AKT.SADA C	KON ZAC	22	27	32	39	75	SI	R/C	N				N	N	R/C	N	Y		N	N
	26	R110	EA17	7SD502	PARAMETRIZ.AKT.SADA D	KON ZAC	22	27	32	39	75	SI	R/C	N				N	N	R/C	N	Y		N	N
	27	R110	EA17	7SD502	POSOBENIE PLAST.OCHR	KON ZAC	22	27	32	39	75	SI	N	N				N	N	N				N	N
	68	R110	EA17	7SD502	DIF.O: VYP ST.IDIFF>		22	27	32	39		TR	O	Y	O	Y	1	N	N	R	N	Y	Alarm 1 (Hupenbefehl)	N	N
	84	R110	EA17	7SD502	DIF.O:GEN.POPUD	KON ZAC	22	27	32	39	78	SI	R/C	Y	R/C	Y	1	N	N	R/C	N	Y	Alarm 1 (Hupenbefehl)	N	N
51	111	R110	EA17	7SD502	VAZBA JE VYPNUTA	KON ZAC	22	27	32	39	75	SI	R/C	N				N	N	R/C	N	Y		N	N
51	113	R110	EA17	7SD502	VAZBA V CINNOSTI	KON ZAC	22	27	32	39	75	SI	R/C	N				N	N	R/C	N	Y		N	N
51	117	R110	EA17	7SD502	VAZBA VYP. IMPULZ	KON ZAC	22	27	32	39	78	SI	R/C	N				N	N	R/C	N	Y		N	N
62	6	R110	EA17	7SD502	REZ.BLOK.STUP.I>>	KON ZAC	22	27	32	39	75	SI	R/C	N				N	N	R/C	N	Y		N	N
62	7	R110	EA17	7SD502	REZ.BLOK.STUP.I>/Ip	KON ZAC	22	27	32	39	75	SI	R/C	N				N	N	R/C	N	Y		N	N
62	103	R110	EA17	7SD502	REZ. V. CINNOSTI	KON ZAC	22	27	32	39	75	SI	R/C	N				N	N	R/C	N	Y		N	N
62	111	R110	EA17	7SD502	REZ.GEN.POPUD		22	27	32	39		TR	O	Y	O	Y	1	N	N	R	N	Y	Alarm 1 (Hupenbefehl)	N	N
62	121	R110	EA17	7SD502	REZ.POPUD I>>		22	27	32	39		TR	O	Y	O	Y	1	N	N	R	N	Y	Alarm 1 (Hupenbefehl)	N	N
62	122	R110	EA17	7SD502	REZ.POPUD I>/Ip		22	27	32	39		TR	O	Y	O	Y	1	N	N	R	N	Y	Alarm 1 (Hupenbefehl)	N	N
62	141	R110	EA17	7SD502	REZ.SKRAT.CAS		22	27	32	39		TR	O	Y	O	Y	1	N	N	R	N	Y	Alarm 1 (Hupenbefehl)	N	N
62	142	R110	EA17	7SD502	REZ.NADPR.CAS		22	27	32	39		TR	O	Y	O	Y	1	N	N	R	N	Y	Alarm 1 (Hupenbefehl)	N	N
62	151	R110	EA17	7SD502	REZ.GEN.VYP.IMPULZ		22	27	32	39		TR	O	Y	O	Y	1	N	N	R	N	Y	Alarm 1 (Hupenbefehl)	N	N
92	17	R110	EA17	7SD502	DIF.O:V CINNOSTI	KON ZAC	22	27	32	39	75	SI	R/C	N				N	N	R/C	N	Y		N	N
93	11	R110	EA17	7SD502	DIAL.VYPINANIE VYPNUTE	KON ZAC	22	27	32	39	75	SI	R/C	N				N	N	R/C	N	Y		N	N
93	16	R110	EA17	7SD502	DIAL.VYP.IMP.VYSLANY	KON ZAC	22	27	32	39	75	SI	R/C	N				N	N	R/C	N	Y		N	N
93	41	R110	EA17	7SD502	VYP.PROTIST:VYPNUTE	KON ZAC	22	27	32	39	75	SI	R/C	N				N	N	R/C	N	Y		N	N
93	43	R110	EA17	7SD502	VYP.PROTIST.V.CINNOSTI	KON ZAC	22	27	32	39	75	SI	R/C	N				N	N	R/C	N	Y		N	N
93	46	R110	EA17	7SD502	VYP.PROTIS:POPUD	KON ZAC	22	27	32	39	78	SI	R/C	Y	R/C	Y	1	N	N	R/C	N	Y	Alarm 1 (Hupenbefehl)	N	N
93	47	R110	EA17	7SD502	VYP.PROTIS:VYP.IMP	KON ZAC	22	27	32	39	78	SI	R/C	Y	R/C	Y	1	N	N	R/C	N	Y	Alarm 1 (Hupenbefehl)	N	N
93	71	R110	EA17	7SD502	KONTR.PREN.CES.VYPNUTA	KON ZAC	22	27	32	39	75	SI	R/C	N				N	N	R/C	N	Y		N	N
93	76	R110	EA17	7SD502	POR.POM.PRENOS.CESTY	KON ZAC	22	27	32	39	75	SI	R/C	N				N	N	R/C	N	Y		N	N
135	81	R110	EA17	7SD502	OCHRANA PRIPRAVENA	KON ZAC	22	27	32	39	75	SI	R/C	N				N	N	R/C	N	Y		N	N
135	130	R110	EA17	7SD502	BUFER SIGN. PREPLNENY		22	27	32	39	0	TR	O	N				N	N	R	N	Y		N	N

Documentation structur: Standard
Source file: K0050722.ODA

Date	22.07.2005	VSZ KOSICE	SIEMENS AG ISATOOLS
Drawn	LANG		
Appr.			
Remarks	Date	Name Norm	Orig./Repl. 1/Repl. by

Substation control system 6MB
Numerical protection device:
Indications
Table

T = /BE 80
+

-S104

Station:

Device EA17 7SD502
Device type: 7SD502/503
Function type: 7SD502/503
Manufact.: SIEMENS

Packet number: 3
Version number: 0

Connection Device: EA17 EAG
Subrack: EA17 7SD502
Module:
Comm. processor:
Channel connection
UART: 2
MUX:

Function type	Info number	Section	Bay	Logical device	Lower limit	Value text	Column section	Column bay	Column logical device	Column information	Column value text	Indication type	Entry in event list	Entry in alarm list	Acknowledge	Display in indication area	Indication class	Entry in SML	Display in diagram	Archive	Operational indications	Protection indications	Command derivation	Tel ctrl FP/SC	Command output
135	131	R110	EA17	7SD502	STRATA SIGN. PRE LSA		22	27	32	39	0	TR	O	N				N	N	R	N	Y		N	N
135	166	R110	EA17	7SD502	PORUCHA V/V JEDN.C.1	KON ZAC	22	27	32	39	75	SI	R/C	N				N	N	R/C	N	Y		N	N
135	170	R110	EA17	7SD502	PORUCHA V/V JEDNOTKY	KON ZAC	22	27	32	39	75	SI	R/C	N				N	N	R/C	N	Y		N	N
135	231	R110	EA17	7SD502	PORUCHA NAPAJ.OCHR.	KON ZAC	22	27	32	39	78	SI	R/C	Y	R/C	Y	1	N	N	R/C	N	Y	Alarm 1 (Hupenbefehl)	N	N
150	152	R110	EA17	7SD502	SUM.ZRUS.POSOB.OCHR.		22	27	32	39	0	TR	O	Y	O	Y	1	N	N	R	N	Y	Alarm 1 (Hupenbefehl)	N	N
150	161	R110	EA17	7SD502	SUM.GEN.VYP.IMPULZ		22	27	32	39	0	TR	O	Y	O	Y	1	N	N	R	N	Y	Alarm 1 (Hupenbefehl)	N	N
167	13	R110	EA17	7SD502	O.PRETAZ:V CINNOSTI	KON ZAC	22	27	32	39	75	SI	R/C	N				N	N	R/C	N	Y		N	N
167	15	R110	EA17	7SD502	O.PRETAZ:PRUD.VYSTR	KON ZAC	22	27	32	39	75	SI	R/C	N				N	N	R/C	N	Y		N	N
167	16	R110	EA17	7SD502	O.PRETAZ:TEPEL.VYSTR.	KON ZAC	22	27	32	39	75	SI	R/C	N				N	N	R/C	N	Y		N	N
167	17	R110	EA17	7SD502	O.PRETAZ:POPUD	KON ZAC	22	27	32	39	75	SI	R/C	N				N	N	R/C	N	Y		N	N
167	21	R110	EA17	7SD502	O.PRETAZ:VYP.POVEL		22	27	32	39		TR	O	Y	O	Y	1	N	N	R	N	Y	Alarm 1 (Hupenbefehl)	N	N

Proprietary data, company confidential. All rights reserved.
Confie a titre de secret d'entreprise. Tous droits reservés.
Comunicado como segredo empresarial. Reservados todos os direitos.
Confiado como secreto industrial. Nos reservamos todos los derechos.

The reproduction, transmission or use of theis document or its is not permitted without expres written authority.
Offenders will be liable for damages. All rights, including rights created by patent grant or registration of a utility model or design, are reserved.

Documentation structur: Standard
Source file: KO050722.ODA

Rev.	Remarks	Date	Name	Date	22.07.2005	VSZ KOSICE	SIEMENS AG ISA TOOLS	Substation control system 6MB
				Drawn	LANG			Numerical protection device:
				Appr.				Indications
				Norm		Orig./Repl. 1/Repl. by		Table

T = /BE 81
+
-S104
Page 81

Proprietary data, company confidential. All rights reserved
Confia a ltre de secret dentreprise. Tous droits reservs
Comunicado como segredo empresarial Reservados todos os direitos
Confiado como secreto industrial Nos reservamos todos los derechos.
The reproduction, transmission or use of this document or its
is not permitted without expres written authority.
Offenders will be liable for damages. All rights, including rights
created by patent grant or registration of a utility model or design, are reserved

Station:
Device EA17 7SJ512
Device type: 7SJ512
Function type: 7SJ512
Manufact.: SIEMENS

Packet number: 3
Version number: 0

Connection Device: EA17 EAG
Subrack: EA17 7SJ512
Module:
Comm. processor:
Channel connection
UART: 2
MUX:

Function type	Info number	Section	Bay	Logical device	Lower limit	Value text	Column section	Column bay	Column logical device	Column information	Column value text	Indication type	Entry in event list	Entry in alarm list	Acknowledge	Display in indication area	Indication class	Entry in SML	Display in diagram	Archive	Operational indications	Protection indications	Command derivation	Tel ctrl FP/SC	Command output
	19	R110	EA17	7SJ512	NASTAVENIE LED ZOBR.		22	27	32	39	0	TR	O	N				N	N	R	N	Y		N	N
	22	R110	EA17	7SJ512	PARAMETRIZACIA OCHRANY	KON ZAC	22	27	32	39	75	SI	R/C	N				N	N	R/C	N	Y		N	N
	27	R110	EA17	7SJ512	ANWENDERDEF. MELDUNG 1	KON ZAC	22	27	32	39	75	SI	N	N				N	N	N				N	N
	28	R110	EA17	7SJ512	ANWENDERDEF. MELDUNG 2	KON ZAC	22	27	32	39	75	SI	N	N				N	N	N				N	N
	29	R110	EA17	7SJ512	ANWENDERDEF. MELDUNG 3	KON ZAC	22	27	32	39	75	SI	N	N				N	N	N				N	N
	30	R110	EA17	7SJ512	ANWENDERDEF. MELDUNG 4	KON ZAC	22	27	32	39	75	SI	N	N				N	N	N				N	N
	32	R110	EA17	7SJ512	PORUCHA MER. PRUDU	KON ZAC	22	27	32	39	75	SI	R/C	N				N	N	R/C	N	Y		N	N
	33	R110	EA17	7SJ512	PORUCHA MER.NAPATIA	KON ZAC	22	27	32	39	75	SI	R/C	N				N	N	R/C	N	Y		N	N
	36	R110	EA17	7SJ512	KONTROLA VYST.JEDN.	KON ZAC	22	27	32	39	75	SI	R/C	N				N	N	R/C	N	Y		N	N
	48	R110	EA17	7SJ512	ZEMNE SPOJENIE V L1	KON ZAC	22	27	32	39	75	SI	N	N				N	N	N				N	N
	49	R110	EA17	7SJ512	ZEMNE SPOJENIE V L2	KON ZAC	22	27	32	39	75	SI	N	N				N	N	N				N	N
	50	R110	EA17	7SJ512	ZEMNE SPOJENIE V L3	KON ZAC	22	27	32	39	75	SI	N	N				N	N	N				N	N
	68	R110	EA17	7SJ512	NADPR.O.GEN.VYP.IMP		22	27	32	39		TR	O	Y	O	Y	1	N	N	R	N	Y	Alarm 1 (Hupenbefehl)	N	N
	74	R110	EA17	7SJ512	SUM.VYP.IMP.VPRED		22	27	32	39		TR	O	Y	O	Y	1	N	N	R	N	Y	Alarm 1 (Hupenbefehl)	N	N
	75	R110	EA17	7SJ512	SUM.VYP.IMP.VZAD		22	27	32	39		TR	O	Y	O	Y	1	N	N	R	N	Y	Alarm 1 (Hupenbefehl)	N	N
	84	R110	EA17	7SJ512	NADPR.OCHR.GEN.POPUD	KON ZAC	22	27	32	39	78	SI	R/C	Y	R/C	Y	1	N	N	R/C	N	Y	Alarm 1 (Hupenbefehl)	N	N
	90	R110	EA17	7SJ512	NADPR.OCHR.VYP.IMP2		22	27	32	39		TR	O	N				N	N	N				N	N
	91	R110	EA17	7SJ512	SKRAT.OCHR.VYP.IMP.		22	27	32	39		TR	O	Y	O	Y	1	N	N	R	N	Y	Alarm 1 (Hupenbefehl)	N	N
60	46	R110	EA17	7SJ512	SKRAT.OCHR.POPUD L1	KON ZAC	22	27	32	39	78	SI	R/C	Y	R/C	Y	1	N	N	R/C	N	Y	Alarm 1 (Hupenbefehl)	N	N
60	47	R110	EA17	7SJ512	SKRAT.OCHR.POPUD L2	KON ZAC	22	27	32	39	78	SI	R/C	Y	R/C	Y	1	N	N	R/C	N	Y	Alarm 1 (Hupenbefehl)	N	N
60	48	R110	EA17	7SJ512	SKRAT.OCHR.POPUD L3	KON ZAC	22	27	32	39	78	SI	R/C	Y	R/C	Y	1	N	N	R/C	N	Y	Alarm 1 (Hupenbefehl)	N	N
60	49	R110	EA17	7SJ512	SKRAT.OCHR.CAS		22	27	32	39		TR	O	Y	O	Y	1	N	N	R	N	Y	Alarm 1 (Hupenbefehl)	N	N
60	50	R110	EA17	7SJ512	NADPR.OCHR.POPUD L1	KON ZAC	22	27	32	39	78	SI	R/C	Y	R/C	Y	1	N	N	R/C	N	Y	Alarm 1 (Hupenbefehl)	N	N
60	51	R110	EA17	7SJ512	NADPR.OCHR.POPUD L2	KON ZAC	22	27	32	39	78	SI	R/C	Y	R/C	Y	1	N	N	R/C	N	Y	Alarm 1 (Hupenbefehl)	N	N
60	52	R110	EA17	7SJ512	NADPR.OCHR.POPUD L3	KON ZAC	22	27	32	39	78	SI	R/C	Y	R/C	Y	1	N	N	N			Alarm 1 (Hupenbefehl)	N	N
60	53	R110	EA17	7SJ512	NADPR.OCHR.CAS		22	27	32	39		TR	O	Y	O	Y	1	N	N	R	N	Y	Alarm 1 (Hupenbefehl)	N	N
63	21	R110	EA17	7SJ512	NADPR.SMER.POPUD L1	KON ZAC	22	27	32	39	78	SI	R/C	Y	R/C	Y	1	N	N	R/C	N	Y	Alarm 1 (Hupenbefehl)	N	N
63	22	R110	EA17	7SJ512	NADPR.SMER.POPUD L2	KON ZAC	22	27	32	39	78	SI	R/C	Y	R/C	Y	1	N	N	R/C	N	Y	Alarm 1 (Hupenbefehl)	N	N
63	23	R110	EA17	7SJ512	NADPR.SMER.POPUD L3	KON ZAC	22	27	32	39	78	SI	R/C	Y	R/C	Y	1	N	N	R/C	N	Y	Alarm 1 (Hupenbefehl)	N	N
63	24	R110	EA17	7SJ512	NADPR.SMER.OCHR.CAS		22	27	32	39		TR	O	Y	O	Y	1	N	N	R	N	Y	Alarm 1 (Hupenbefehl)	N	N
135	81	R110	EA17	7SJ512	OCHRANA PRIPRAVENA	KON ZAC	22	27	32	39	75	SI	R/C	N				N	N	R/C	N	Y		N	N
135	130	R110	EA17	7SJ512	BUFER SIGN. PREPLNENY		22	27	32	39	0	TR	O	N				N	N	R	N	Y		N	N

Documentation structur: Standard
Source file: KO050722.ODA

Date	22.07.2005	VSZ KOSICE	SIEMENS AG ISATOOLS	Substation control system 6MB	T = /BE 82
Drawn	LANG			Numerical protection device:	+
Appr.				Indications	-S104
Norm				Table	Page

Remarks | Date | Name | Orig./Repl. 1/Repl. by

Station:

Device EA17 7SJ512
Device type: 7SJ512
Function type: 7SJ512
Manufact.: SIEMENS

Packet number: 3
Version number: 0

Connection Device: EA17 EAG
Subrack: EA17 7SJ512
Module:
Comm. processor:
Channel connection
UART: 2
MUX:

Function type	Info number	Section	Bay	Logical device	Lower limit	Value text	Column section	Column bay	Column logical device	Column information	Column value text	Indication type	Entry in event list	Entry in alarm list	Acknowledge	Display in indication area	Indication class	Entry in SML	Display in diagram	Archive	Operational indications	Protection indications	Command derivation	Tel ctrl FP/SC	Command output
135	131	R110	EA17	7SJ512	STRATA SIGN. PRE LSA		22	27	32	39	0	TR	O	N				N	N	R	N	Y		N	N
135	170	R110	EA17	7SJ512	PORUCHA V/V JEDNOTKY	KON ZAC	22	27	32	39	75	SI	R/C	N				N	N	R/C	N	Y		N	N
135	231	R110	EA17	7SJ512	PORUCHA NAPAJ.OCHR.	KON ZAC	22	27	32	39	78	SI	R/C	Y	R/C	Y	1	N	N	R/C	N	Y	Alarm 1 (Hupenbefehl)	N	N
150	151	R110	EA17	7SJ512	SUM.POSOBENIE OCHR.		22	27	32	39	0	TR	O	Y	O	Y	1	N	N	R	N	Y	Alarm 1 (Hupenbefehl)	N	N
150	152	R110	EA17	7SJ512	SUM.ZRUS.POSOB.OCHR.		22	27	32	39	0	TR	O	Y	O	Y	1	N	N	R	N	Y	Alarm 1 (Hupenbefehl)	N	N
150	161	R110	EA17	7SJ512	SUM.GEN.VYP.IMPULZ		22	27	32	39	0	TR	O	Y	O	Y	1	N	N	R	N	Y	Alarm 1 (Hupenbefehl)	N	N
150	171	R110	EA17	7SJ512	VYPIN.PRUD. L1 I/In=		22	27	32	39	0	NV	O	Y	O	Y	1	N	N	R	N	Y	Alarm 1 (Hupenbefehl)	N	N
150	172	R110	EA17	7SJ512	VYPIN.PRUD. L2 I/In=		22	27	32	39	0	NV	O	Y	O	Y	1	N	N	R	N	Y	Alarm 1 (Hupenbefehl)	N	N
150	173	R110	EA17	7SJ512	VYPIN.PRUD. L3 I/In=		22	27	32	39	0	NV	O	Y	O	Y	1	N	N	R	N	Y	Alarm 1 (Hupenbefehl)	N	N
167	11	R110	EA17	7SJ512	O.PRETAZ. VYPNUTA	KON ZAC	22	27	32	39	75	SI	R/C	N				N	N	R/C	N	Y		N	N
167	12	R110	EA17	7SJ512	O.PRETAZ. BLOKOV.	KON ZAC	22	27	32	39	75	SI	R/C	N				N	N	R/C	N	Y		N	N
167	13	R110	EA17	7SJ512	O.PRETAZ. V CINNOSTI	KON ZAC	22	27	32	39	75	SI	R/C	N				N	N	R/C	N	Y		N	N
167	15	R110	EA17	7SJ512	O.PRETAZ. PRUD.VYSTR	KON ZAC	22	27	32	39	75	SI	R/C	N				N	N	R/C	N	Y		N	N
167	16	R110	EA17	7SJ512	O.PRETAZ. TEPEL.VYSTR	KON ZAC	22	27	32	39	75	SI	R/C	N				N	N	R/C	N	Y		N	N
167	21	R110	EA17	7SJ512	O.PRETAZ. VYP.POVEL		22	27	32	39		TR	O	N				N	N	R	N	Y		N	N

Proprietary data, company confidential. All rights reserved.
Confie a titre de secret d'entreprise. Tous droits rservs.
Comunicado como segredo empresarial. Reservados todos os direitos.
Confiado como secreto industrial. Nos reservamos todos los derechos.

The reproduction, transmission or use of this document or its is not permitted without express written authority.
Offenders will be liable for damages. All rights, including rights created by patent grant or registration of a utility model or design, are reserved.

Documentation structur: Standard
Source file: KO050722.ODA

Rev.	Remarks	Date	Name	Date	22.07.2005	VSZ KOSICE	SIEMENS AG ISAOOLS	Substation control system 6MB
				Drawn	LANG			Numerical protection device:
				Appr.				Indications
				Norm		Orig./Repl. 1/Repl. by		Table

T = /BE 83
+
-S104
Page 83

Proprietary data, company confidential. All rights reserved.
Confiança da secret dentreprise. Tous droits réservés.
Comunicado como segredo empresarial. Reservados todos os direitos.
Comunicato come segreto aziendale. Tutti i diritti sono riservati.
Comunicado como secreto industrial. Nos reservamos todos los derechos.

The reproduction, transmission or use of this document or its contents is not permitted without express written authority. Offenders will be liable for damages. All rights, including rights created by patent grant or registration of a utility model or design, are reserved.

Documentation structure: Standard
Source file: KO050722.ODA

Station:
Device EA18 7SD502
Device type: 7SD502/503
Function type: 7SD502/503
Manufact.: SIEMENS

Packet number: 3
Version number: 0

Connection Device: EA18 EAG
Subrack: EA18 7SD502
Module:
Comm. processor:
Channel connection
UART: 2
MUX:

Function type	Info number	Section	Bay	Logical device	Lower limit	Value text	Column section	Column bay	Column logical device	Column information	Column value text	Indication type	Entry in event list	Entry in alarm list	Acknowledge	Display in indication area	Indication class	Entry in SML	Display in diagram	Archive	Operational indications	Protection indications	Command derivation	Tel ctrl FP/SC	Command output
	19	R110	EA18	7SD502	NASTAVENIE LED ZOBR.		22	27	32	39	0	TR	O	N				N	N	R	N	Y		N	N
	22	R110	EA18	7SD502	PARAMETRIZACIA OCHRANY	KON ZAC	22	27	32	39	75	SI	R/C	N				N	N	R/C	N	Y		N	N
	23	R110	EA18	7SD502	PARAMETRIZ.AKT.SADA A	KON ZAC	22	27	32	39	75	SI	R/C	N				N	N	R/C	N	Y		N	N
	24	R110	EA18	7SD502	PARAMETRIZ.AKT.SADA B	KON ZAC	22	27	32	39	75	SI	R/C	N				N	N	R/C	N	Y		N	N
	25	R110	EA18	7SD502	PARAMETRIZ.AKT.SADA C	KON ZAC	22	27	32	39	75	SI	R/C	N				N	N	R/C	N	Y		N	N
	26	R110	EA18	7SD502	PARAMETRIZ.AKT.SADA D	KON ZAC	22	27	32	39	75	SI	R/C	N				N	N	R/C	N	Y		N	N
	27	R110	EA18	7SD502	POSOBENIE PLAST.OCHR	KON ZAC	22	27	32	39	75	SI	N	N				N	N	N				N	N
	68	R110	EA18	7SD502	DIF.O: VYP ST.IDIFF>		22	27	32	39		TR	O	Y	O	Y	1	N	N	R	N	Y	Alarm 1 (Hupenbefehl)	N	N
	84	R110	EA18	7SD502	DIF.O:GEN.POPUD	KON ZAC	22	27	32	39	78	SI	R/C	Y	R/C	Y	1	N	N	R/C	N	Y	Alarm 1 (Hupenbefehl)	N	N
51	111	R110	EA18	7SD502	VAZBA JE VYPNUTA	KON ZAC	22	27	32	39	75	SI	R/C	N				N	N	R/C	N	Y		N	N
51	113	R110	EA18	7SD502	VAZBA V CINNOSTI	KON ZAC	22	27	32	39	75	SI	R/C	N				N	N	R/C	N	Y		N	N
51	117	R110	EA18	7SD502	VAZBA VYP. IMPULZ	KON ZAC	22	27	32	39	78	SI	R/C	N				N	N	R/C	N	Y		N	N
62	6	R110	EA18	7SD502	REZ.BLOK.STUP.I>>	KON ZAC	22	27	32	39	75	SI	R/C	N				N	N	R/C	N	Y		N	N
62	7	R110	EA18	7SD502	REZ.BLOK.STUP.I>/Ip	KON ZAC	22	27	32	39	75	SI	R/C	N				N	N	R/C	N	Y		N	N
62	103	R110	EA18	7SD502	REZ. V. CINNOSTI	KON ZAC	22	27	32	39	75	SI	R/C	N				N	N	R/C	N	Y		N	N
62	111	R110	EA18	7SD502	REZ.GEN.POPUD		22	27	32	39		TR	O	Y	O	Y	1	N	N	R	N	Y	Alarm 1 (Hupenbefehl)	N	N
62	121	R110	EA18	7SD502	REZ.POPUD I>>		22	27	32	39		TR	O	Y	O	Y	1	N	N	R	N	Y	Alarm 1 (Hupenbefehl)	N	N
62	122	R110	EA18	7SD502	REZ.POPUD I>/Ip		22	27	32	39		TR	O	Y	O	Y	1	N	N	R	N	Y	Alarm 1 (Hupenbefehl)	N	N
62	141	R110	EA18	7SD502	REZ.SKRAT.CAS		22	27	32	39		TR	O	Y	O	Y	1	N	N	R	N	Y	Alarm 1 (Hupenbefehl)	N	N
62	142	R110	EA18	7SD502	REZ.NADPR.CAS		22	27	32	39		TR	O	Y	O	Y	1	N	N	R	N	Y	Alarm 1 (Hupenbefehl)	N	N
62	151	R110	EA18	7SD502	REZ.GEN.VYP.IMPULZ		22	27	32	39		TR	O	Y	O	Y	1	N	N	R	N	Y	Alarm 1 (Hupenbefehl)	N	N
92	17	R110	EA18	7SD502	DIF.O:V CINNOSTI	KON ZAC	22	27	32	39	75	SI	R/C	N				N	N	R/C	N	Y		N	N
93	11	R110	EA18	7SD502	DIAL.VYPINANIE VYPNUTE	KON ZAC	22	27	32	39	75	SI	R/C	N				N	N	R/C	N	Y		N	N
93	16	R110	EA18	7SD502	DIAL.VYP.IMP.VYSLANY	KON ZAC	22	27	32	39	75	SI	R/C	N				N	N	R/C	N	Y		N	N
93	41	R110	EA18	7SD502	VYP.PROTIST:VYPNUTE	KON ZAC	22	27	32	39	75	SI	R/C	N				N	N	R/C	N	Y		N	N
93	43	R110	EA18	7SD502	VYP.PROTIST.V.CINNOSTI	KON ZAC	22	27	32	39	75	SI	R/C	N				N	N	R/C	N	Y		N	N
93	46	R110	EA18	7SD502	VYP.PROTIS:POPUD	KON ZAC	22	27	32	39	78	SI	R/C	Y	R/C	Y	1	N	N	R/C	N	Y	Alarm 1 (Hupenbefehl)	N	N
93	47	R110	EA18	7SD502	VYP.PROTIS:VYP.IMP	KON ZAC	22	27	32	39	78	SI	R/C	Y	R/C	Y	1	N	N	R/C	N	Y	Alarm 1 (Hupenbefehl)	N	N
93	71	R110	EA18	7SD502	KONTR.PREN.CES.VYPNUTA	KON ZAC	22	27	32	39	75	SI	R/C	N				N	N	R/C	N	Y		N	N
93	76	R110	EA18	7SD502	POR.POM.PRENOS.CESTY	KON ZAC	22	27	32	39	75	SI	R/C	N				N	N	R/C	N	Y		N	N
135	81	R110	EA18	7SD502	OCHRANA PRIPRAVENA	KON ZAC	22	27	32	39	75	SI	R/C	N				N	N	R/C	N	Y		N	N
135	130	R110	EA18	7SD502	BUFER SIGN. PREPLNENY		22	27	32	39	0	TR	O	N				N	N	R	N	Y		N	N

Date	22.07.2005	VSZ KOSICE	SIEMENS AG ISATOOLS
Drawn	LANG		
Appr.			
Norm			

Remarks | Date | Name | Orig./Repl. 1/Repl. by

Substation control system 6MB
Numerical protection device:
Indications
Table

T = /BE 84
+
-S104
Page 84

Station:
Device EA18 7SD502
Device type: 7SD502/503
Function type: 7SD502/503
Manufact.: SIEMENS

Packet number: 3
Version number: 0

Connection Device: EA18 EAG
Subrack: EA18 7SD502
Module:
Comm. processor:
Channel connection
UART: 2
MUX:

Function type	Info number	Section	Bay	Logical device	Lower limit	Value text	Column section	Column bay	Column logical device	Column information	Column value text	Indication type	Entry in event list	Entry in alarm list	Acknowledge	Display in indication area	Indication class	Entry in SML	Display in diagram	Archive	Operational indications	Protection indications	Command derivation	Tel ctrl FP/SC	Command output
135	131	R110	EA18	7SD502	STRATA SIGN. PRE LSA		22	27	32	39	0	TR	O	N				N	N	R	N	Y		N	N
135	166	R110	EA18	7SD502	PORUCHA V/V JEDN.C.1	KON ZAC	22	27	32	39	75	SI	R/C	N				N	N	R/C	N	Y		N	N
135	170	R110	EA18	7SD502	PORUCHA V/V JEDNOTKY	KON ZAC	22	27	32	39	75	SI	R/C	N				N	N	R/C	N	Y		N	N
135	231	R110	EA18	7SD502	PORUCHA NAPAJ.OCHR.	KON ZAC	22	27	32	39	78	SI	R/C	Y	R/C	Y	1	N	N	R/C	N	Y	Alarm 1 (Hupenbefehl)	N	N
150	152	R110	EA18	7SD502	SUM.ZRUS.POSOB.OCHR.		22	27	32	39	0	TR	O	Y	O	Y	1	N	N	R	N	Y	Alarm 1 (Hupenbefehl)	N	N
150	161	R110	EA18	7SD502	SUM.GEN.VYP.IMPULZ		22	27	32	39	0	TR	O	Y	O	Y	1	N	N	R	N	Y	Alarm 1 (Hupenbefehl)	N	N
167	13	R110	EA18	7SD502	O.PRETAZ:V CINNOSTI	KON ZAC	22	27	32	39	75	SI	R/C	N				N	N	R/C	N	Y		N	N
167	15	R110	EA18	7SD502	O.PRETAZ:PRUD.VYSTR	KON ZAC	22	27	32	39	75	SI	R/C	N				N	N	R/C	N	Y		N	N
167	16	R110	EA18	7SD502	O.PRETAZ:TEPEL.VYSTR.	KON ZAC	22	27	32	39	75	SI	R/C	N				N	N	R/C	N	Y		N	N
167	17	R110	EA18	7SD502	O.PRETAZ:POPUD	KON ZAC	22	27	32	39	75	SI	R/C	N				N	N	R/C	N	Y		N	N
167	21	R110	EA18	7SD502	O.PRETAZ:VYP.POVEL		22	27	32	39		TR	O	Y	O	Y	1	N	N	R	N	Y	Alarm 1 (Hupenbefehl)	N	N

Proprietary data, company confidential. All rights reserved.
Confia a tire de secret d'entreprise. Tous droits réservés.
Comunicado como segredo empresarial. Reservados todos os direitos.
Confiado como secreto industrial. Nos reservamos todos los derechos.
The reproduction, transmission or use of this document or its contents is not permitted without express written authority. Offenders will be liable for damages. All rights, including rights created by patent grant or registration of a utility model or design, are reserved.

Documentation structure: Standard
Source file: KO050722.ODA

Rev.	Remarks	Date	Name	Norm	Date 22.07.2005	Drawn LANG	Appr.	Orig./Repl. 1/Repl. by

VSZ KOSICE

SIEMENS AG
ISATOOLS

Substation control system 6MB
Numerical protection device:
Indications
Table

T = /BE 85
+
-S104
Page 85

Proprietary data, company confidential. All rights reserved
Confia a tribe da secret d'entreprise. Tous droits reservs
Comunicado como segredo empresarial. Reservados todos os direitos.
Confiado como secreto industrial. Nos reservamos todos los derechos.
The reproduction, transmission or use of this document or its is not permitted without expres written authority.
Offenders will be liable for damages. All rights, including rights created by patent grant or registration of a utility model or design, are reserved

Station:

Device EA18 7SJ511
Device type: 7SJ511
Function type: 7SJ511
Manufact.: SIEMENS

Packet number: 3
Version number: 0

Connection Device: EA18 EAG
Subrack: EA18 7SJ511
Module:
Comm. processor:
Channel connection
UART: 2
MUX:

Function type	Info number	Section	Bay	Logical device	Lower limit	Value text	Column section	Column bay	Column logical device	Column information	Column value text	Indication type	Entry in event list	Entry in alarm list	Acknowledge	Display in indication area	Indication class	Entry in SML	Display in diagram	Archive	Operational indications	Protection indications
	19	R110	EA18	7SJ511	NASTAVENIE LED ZOBR.		22	27	32	39	0	TR	O	N				N	N	R	N	Y
	22	R110	EA18	7SJ511	PARAMETRIZACIA OCHRANY	KON ZAC	22	27	32	39	75	SI	R/C	N				N	N	R/C	N	Y
	27	R110	EA18	7SJ511	ANWENDERDEF. MELDUNG 1	KON ZAC	22	27	32	39	75	SI	N	N				N	N	N		
	84	R110	EA18	7SJ511	NADPR.OCHR.GEN.POPUD	KON ZAC	22	27	32	39	78	SI	R/C	Y	R/C	Y	1	N	N	R/C	N	Y
	90	R110	EA18	7SJ511	NADPR.OCHR.VYP.IMP		22	27	32	39		TR	O	Y	O	Y	1	N	N	R	N	Y
	91	R110	EA18	7SJ511	SKRAT.OCHR.VYP.IMP.		22	27	32	39		TR	O	Y	O	Y	1	N	N	R	N	Y
60	1	R110	EA18	7SJ511	NADPR.OCHR.BLOK.I>>	KON ZAC	22	27	32	39	75	SI	R/C	N				N	N	R/C	N	Y
60	2	R110	EA18	7SJ511	NADPR.OCHR.BLOK.I>	KON ZAC	22	27	32	39	75	SI	R/C	N				N	N	R/C	N	Y
60	46	R110	EA18	7SJ511	SKRAT.OCHR.POPUD L1	KON ZAC	22	27	32	39	78	SI	R/C	Y	R/C	Y	1	N	N	R/C	N	Y
60	47	R110	EA18	7SJ511	SKRAT.OCHR.POPUD L2	KON ZAC	22	27	32	39	78	SI	R/C	Y	R/C	Y	1	N	N	R/C	N	Y
60	48	R110	EA18	7SJ511	SKRAT.OCHR.POPUD L3	KON ZAC	22	27	32	39	78	SI	R/C	Y	R/C	Y	1	N	N	R/C	N	Y
60	49	R110	EA18	7SJ511	SKRAT.OCHR.CAS		22	27	32	39		TR	O	Y	O	Y	1	N	N	R	N	Y
60	50	R110	EA18	7SJ511	NADPR.OCHR.POPUD L1	KON ZAC	22	27	32	39	78	SI	R/C	Y	R/C	Y	1	N	N	R/C	N	Y
60	51	R110	EA18	7SJ511	NADPR.OCHR.POPUD L2	KON ZAC	22	27	32	39	78	SI	R/C	Y	R/C	Y	1	N	N	R/C	N	Y
60	52	R110	EA18	7SJ511	NADPR.OCHR.POPUD L3	KON ZAC	22	27	32	39	78	SI	R/C	Y	R/C	Y	1	N	N	R/C	N	Y
60	53	R110	EA18	7SJ511	NADPR.OCHR.CAS		22	27	32	39		TR	O	Y	O	Y	1	N	N	R	N	Y
135	81	R110	EA18	7SJ511	OCHRANA PRIPRAVENA	KON ZAC	22	27	32	39	75	SI	R/C	N				N	N	R/C	N	Y
135	130	R110	EA18	7SJ511	BUFER SIGN. PREPLNENY		22	27	32	39	0	TR	O	N				N	N	R	N	Y
135	131	R110	EA18	7SJ511	STRATA SIGN. PRE LSA		22	27	32	39	0	TR	O	N				N	N	R	N	Y
135	231	R110	EA18	7SJ511	PORUCHA NAPAJ.OCHR.	KON ZAC	22	27	32	39	78	SI	R/C	Y	R/C	Y	1	N	N	R/C	N	Y
150	151	R110	EA18	7SJ511	SUM.POSOBENIE OCHR.		22	27	32	39	0	TR	O	Y	O	Y	1	N	N	R	N	Y
150	152	R110	EA18	7SJ511	SUM.ZRUS.POSOB.OCHR.		22	27	32	39	0	TR	O	Y	O	Y	1	N	N	R	N	Y
150	161	R110	EA18	7SJ511	SUM.GEN.VYP.IMPULZ		22	27	32	39	0	TR	O	Y	O	Y	1	N	N	R	N	Y
150	171	R110	EA18	7SJ511	VYPIN.PRUD. L1 I/In=		22	27	32	39	0	NV	O	Y	O	Y	1	N	N	R	N	Y
150	172	R110	EA18	7SJ511	VYPIN.PRUD. L2 I/In=		22	27	32	39	0	NV	O	Y	O	Y	1	N	N	R	N	Y
150	173	R110	EA18	7SJ511	VYPIN.PRUD. L3 I/In=		22	27	32	39	0	NV	O	Y	O	Y	1	N	N	R	N	Y
167	11	R110	EA18	7SJ511	O.PRETAZ. VYPNUTA	KON ZAC	22	27	32	39	78	SI	R/C	N				N	N	R/C	N	Y
167	12	R110	EA18	7SJ511	O.PRETAZ. BLOKOVANA	KON ZAC	22	27	32	39	78	SI	R/C	N				N	N	R/C	N	Y
167	15	R110	EA18	7SJ511	O.PRETAZ:PRUD.VYSTR	KON ZAC	22	27	32	39	78	SI	R/C	N				N	N	R/C	N	Y
167	16	R110	EA18	7SJ511	O.PRETAZ. TEPEL.VYSTR	KON ZAC	22	27	32	39	78	SI	R/C	N				N	N	R/C	N	Y
167	21	R110	EA18	7SJ511	O.PRETAZ. VYP.POVEL		22	27	32	39		SI	O	Y	O	Y	1	N	N	R	N	Y

Documentation structur: Standard
Source file: K0050722.ODA

Date 22.07.2005
Drawn LANG
Appr.
Norm

VSZ KOSICE

SIEMENS AG
ISATOOLS

Substation control system 6MB
Numerical protection device:
Indications
Table

T = /BE 86
+

-S104

Page

R Remarks Date Name Orig./Repl. 1/Repl. by

Station:
Device EA18 7SJ511
Device type: 7SJ511
Function type: 7SJ511
Manufact.: SIEMENS

Packet number: 3
Version number: 0

Connection Device: EA18 EAG
Subrack: EA18 7SJ511
Module:
Comm. processor:
Channel connection
UART: 2
MUX:

Function type	Info number	Command derivation	Indication derivation	Tel ctrl FP/SC	Command output
	19			N	N
	22			N	N
	27		7SJ511 POSOBENIE PLAST OCHR	N	N
	84	Alarm 1 (Hupenbefehl)		N	N
	90	Alarm 1 (Hupenbefehl)		N	N
	91	Alarm 1 (Hupenbefehl)		N	N
60	1			N	N
60	2			N	N
60	46	Alarm 1 (Hupenbefehl)		N	N
60	47	Alarm 1 (Hupenbefehl)		N	N
60	48	Alarm 1 (Hupenbefehl)		N	N
60	49	Alarm 1 (Hupenbefehl)		N	N
60	50	Alarm 1 (Hupenbefehl)		N	N
60	51	Alarm 1 (Hupenbefehl)		N	N
60	52	Alarm 1 (Hupenbefehl)		N	N
60	53	Alarm 1 (Hupenbefehl)		N	N
135	81			N	N
135	130			N	N
135	131			N	N
135	231	Alarm 1 (Hupenbefehl)		N	N
150	151	Alarm 1 (Hupenbefehl)		N	N
150	152	Alarm 1 (Hupenbefehl)		N	N
150	161	Alarm 1 (Hupenbefehl)		N	N
150	171	Alarm 1 (Hupenbefehl)		N	N
150	172	Alarm 1 (Hupenbefehl)		N	N
150	173	Alarm 1 (Hupenbefehl)		N	N
167	11			N	N
167	12			N	N
167	15			N	N
167	16			N	N
167	21	Alarm 1 (Hupenbefehl)		N	N

Proprietary data, company confidential. All rights reserved.
Confie a titre de secret d'entreprise. Tous droits reservés.
Comunicado como segredo empresarial. Reservados todos os direitos.
Confiado como secreto industrial. Nos reservamos todos los derechos.
The reproduction, transmission or use of this document or its is not permitted without express written authority.
Offenders will be liable for damages. All rights, including rights created by patent grant or registration of a utility model or design, are reserved.

Documentation structur: Standard
Source file: KO050722.ODA

Rev.	Remarks	Date	Name	Date	22.07.2005	VSZ KOSICE	SIEMENS AG ISA TOOLS	Substation control system 6MB Numerical protection device: Indications Table	T = /BE 87 + -S104 Page 87
				Drawn	LANG				
				Appr.					
				Norm		Orig./Repl. 1/Repl. by			

Proprietary data, company confidential. All rights reserved
Confia a tifre de secret d'entreprise. Tous droits reservs.
Comunicado como segredo empresarial. Reservados todos os direitos
Confiado como secreto industrial. Nos reservamos todos los derechos.

The reproduction, transmission or use of this document or its
is not permitted without express written authority.
Offenders will be liable for damages. All rights, including rights
created by patent grant or registration of a utility model or design, are reserved.

Documentation structur: Standard
Source file: KO050722.ODA

Station:

Device EA19 7SD502
Device type: 7SD502/503
Function type: 7SD502/503
Manufact.: SIEMENS

Packet number: 3
Version number: 0

Connection Device: EA19 EAG
Subrack: EA19 7SD502
Module:
Comm. processor:
Channel connection
UART: 2
MUX:

Function type	Info number	Section	Bay	Logical device	Lower limit	Value text	Column section	Column bay	Column logical device	Column information	Column value text	Indication type	Entry in event list	Entry in alarm list	Acknowledge	Display in indication area	Indication class	Entry in SML	Display in diagram	Archive	Operational indications	Protection indications	Command derivation	Tel ctrl FP/SC	Command output
	19	R110	EA19	7SD502	NASTAVENIE LED ZOBR.		22	27	32	39	0	TR	O	N				N	N	R	N	Y		N	N
	22	R110	EA19	7SD502	PARAMETRIZACIA OCHRANY	KON ZAC	22	27	32	39	75	SI	R/C	N				N	N	R/C	N	Y		N	N
	23	R110	EA19	7SD502	PARAMETRIZ.AKT.SADA A	KON ZAC	22	27	32	39	75	SI	R/C	N				N	N	R/C	N	Y		N	N
	24	R110	EA19	7SD502	PARAMETRIZ.AKT.SADA B	KON ZAC	22	27	32	39	75	SI	R/C	N				N	N	R/C	N	Y		N	N
	25	R110	EA19	7SD502	PARAMETRIZ.AKT.SADA C	KON ZAC	22	27	32	39	75	SI	R/C	N				N	N	R/C	N	Y		N	N
	26	R110	EA19	7SD502	PARAMETRIZ.AKT.SADA D	KON ZAC	22	27	32	39	75	SI	R/C	N				N	N	R/C	N	Y		N	N
	27	R110	EA19	7SD502	POSOBENIE PLAST.OCHR	KON ZAC	22	27	32	39	75	SI	N	N				N	N	N				N	N
	68	R110	EA19	7SD502	DIF.O: VYP ST.IDIFF>		22	27	32	39		TR	O	Y	O	Y	1	N	N	R	N	Y	Alarm 1 (Hupenbefehl)	N	N
	84	R110	EA19	7SD502	DIF.O:GEN.POPUD	KON ZAC	22	27	32	39	78	SI	R/C	Y	R/C	Y	1	N	N	R/C	N	Y	Alarm 1 (Hupenbefehl)	N	N
51	111	R110	EA19	7SD502	VAZBA JE VYPNUTA	KON ZAC	22	27	32	39	75	SI	R/C	N				N	N	R/C	N	Y		N	N
51	113	R110	EA19	7SD502	VAZBA V CINNOSTI	KON ZAC	22	27	32	39	75	SI	R/C	N				N	N	R/C	N	Y		N	N
51	117	R110	EA19	7SD502	VAZBA VYP. IMPULZ	KON ZAC	22	27	32	39	78	SI	R/C	N				N	N	R/C	N	Y		N	N
62	6	R110	EA19	7SD502	REZ.BLOK.STUP.I>>	KON ZAC	22	27	32	39	75	SI	R/C	N				N	N	R/C	N	Y		N	N
62	7	R110	EA19	7SD502	REZ.BLOK.STUP.I>/Ip	KON ZAC	22	27	32	39	75	SI	R/C	N				N	N	R/C	N	Y		N	N
62	103	R110	EA19	7SD502	REZ. V. CINNOSTI	KON ZAC	22	27	32	39	75	SI	R/C	N				N	N	R/C	N	Y		N	N
62	111	R110	EA19	7SD502	REZ.GEN.POPUD		22	27	32	39		TR	O	Y	O	Y	1	N	N	R	N	Y	Alarm 1 (Hupenbefehl)	N	N
62	121	R110	EA19	7SD502	REZ.POPUD I>>		22	27	32	39		TR	O	Y	O	Y	1	N	N	R	N	Y	Alarm 1 (Hupenbefehl)	N	N
62	122	R110	EA19	7SD502	REZ.POPUD I>/Ip		22	27	32	39		TR	O	Y	O	Y	1	N	N	R	N	Y	Alarm 1 (Hupenbefehl)	N	N
62	141	R110	EA19	7SD502	REZ.SKRAT.CAS		22	27	32	39		TR	O	Y	O	Y	1	N	N	R	N	Y	Alarm 1 (Hupenbefehl)	N	N
62	142	R110	EA19	7SD502	REZ.NADPR.CAS		22	27	32	39		TR	O	Y	O	Y	1	N	N	R	N	Y	Alarm 1 (Hupenbefehl)	N	N
62	151	R110	EA19	7SD502	REZ.GEN.VYP.IMPULZ		22	27	32	39		TR	O	Y	O	Y	1	N	N	R	N	Y	Alarm 1 (Hupenbefehl)	N	N
92	17	R110	EA19	7SD502	DIF.O:V CINNOSTI	KON ZAC	22	27	32	39	75	SI	R/C	N				N	N	R/C	N	Y		N	N
93	11	R110	EA19	7SD502	DIAL.VYPINANIE VYPNUTE	KON ZAC	22	27	32	39	75	SI	R/C	N				N	N	R/C	N	Y		N	N
93	16	R110	EA19	7SD502	DIAL.VYP.IMP.VYSLANY	KON ZAC	22	27	32	39	75	SI	R/C	N				N	N	R/C	N	Y		N	N
93	41	R110	EA19	7SD502	VYP.PROTIST:VYPNUTE	KON ZAC	22	27	32	39	75	SI	R/C	N				N	N	R/C	N	Y		N	N
93	43	R110	EA19	7SD502	VYP.PROTIST.V.CINNOSTI	KON ZAC	22	27	32	39	75	SI	R/C	N				N	N	R/C	N	Y		N	N
93	46	R110	EA19	7SD502	VYP.PROTIS:POPUD	KON ZAC	22	27	32	39	78	SI	R/C	Y	R/C	Y	1	N	N	R/C	N	Y	Alarm 1 (Hupenbefehl)	N	N
93	47	R110	EA19	7SD502	VYP.PROTIS:VYP.IMP	KON ZAC	22	27	32	39	78	SI	R/C	Y	R/C	Y	1	N	N	R/C	N	Y	Alarm 1 (Hupenbefehl)	N	N
93	71	R110	EA19	7SD502	KONTR.PREN.CES.VYPNUTA	KON ZAC	22	27	32	39	75	SI	R/C	N				N	N	R/C	N	Y		N	N
93	76	R110	EA19	7SD502	POR.POM.PRENOS.CESTY	KON ZAC	22	27	32	39	75	SI	R/C	N				N	N	R/C	N	Y		N	N
135	81	R110	EA19	7SD502	OCHRANA PRIPRAVENA	KON ZAC	22	27	32	39	75	SI	R/C	N				N	N	R/C	N	Y		N	N
135	130	R110	EA19	7SD502	BUFER SIGN. PREPLNENY		22	27	32	39	0	TR	O	N				N	N	R	N	Y		N	N

Date	22.07.2005	VSZ KOSICE	SIEMENS AG ISAOOLS
Drawn	LANG		
Appr.			
Remarks	Date	Name Norm	Orig./Repl. 1/Repl. by

Substation control system 6MB
Numerical protection device:
Indications
Table

T = /BE 88
+
-S104
Page

Station:

Device EA19 7SD502
Device type: 7SD502/503
Function type: 7SD502/503
Manufact.: SIEMENS

Packet number: 3
Version number: 0

Connection Device: EA19 EAG
Subrack: EA19 7SD502
Module:
Comm. processor:
Channel connection
UART: 2
MUX:

Function type	Info number	Section	Bay	Logical device	Lower limit	Value text	Column section	Column bay	Column logical device	Column information	Column value text	Indication type	Entry in event list	Entry in alarm list	Acknowledge	Display in indication area	Indication class	Entry in SML	Display in diagram	Archive	Operational indications	Protection indications	Command derivation	Tel ctrl FP/SC	Command output
135	131	R110	EA19	7SD502	STRATA SIGN. PRE LSA		22	27	32	39	0	TR	O	N				N	N	R	N	Y		N	N
135	166	R110	EA19	7SD502	PORUCHA V/V JEDN.C.1	KON ZAC	22	27	32	39	75	SI	R/C	N				N	N	R/C	N	Y		N	N
135	170	R110	EA19	7SD502	PORUCHA V/V JEDNOTKY	KON ZAC	22	27	32	39	75	SI	R/C	N				N	N	R/C	N	Y		N	N
135	231	R110	EA19	7SD502	PORUCHA NAPAJ.OCHR.	KON ZAC	22	27	32	39	78	SI	R/C	Y	R/C	Y	1	N	N	R/C	N	Y	Alarm 1 (Hupenbefehl)	N	N
150	152	R110	EA19	7SD502	SUM.ZRUS.POSOB.OCHR.		22	27	32	39	0	TR	O	Y	O	Y	1	N	N	R	N	Y	Alarm 1 (Hupenbefehl)	N	N
150	161	R110	EA19	7SD502	SUM.GEN.VYP.IMPULZ		22	27	32	39	0	TR	O	Y	O	Y	1	N	N	R	N	Y	Alarm 1 (Hupenbefehl)	N	N
167	13	R110	EA19	7SD502	O.PRETAZ:V CINNOSTI	KON ZAC	22	27	32	39	75	SI	R/C	N				N	N	R/C	N	Y		N	N
167	15	R110	EA19	7SD502	O.PRETAZ:PRUD.VYSTR	KON ZAC	22	27	32	39	75	SI	R/C	N				N	N	R/C	N	Y		N	N
167	16	R110	EA19	7SD502	O.PRETAZ:TEPEL.VYSTR.	KON ZAC	22	27	32	39	75	SI	R/C	N				N	N	R/C	N	Y		N	N
167	17	R110	EA19	7SD502	O.PRETAZ:POPUD	KON ZAC	22	27	32	39	75	SI	R/C	N				N	N	R/C	N	Y		N	N
167	21	R110	EA19	7SD502	O.PRETAZ:VYP.POVEL		22	27	32	39		TR	O	Y	O	Y	1	N	N	R	N	Y	Alarm 1 (Hupenbefehl)	N	N

Proprietary data, company confidential. All rights reserved.
Confie a titre de secret d'entreprise. Tous droits réservés.
Comunicado como segredo empresarial. Reservados todos os direitos.
Confiado como secreto industrial. Nos reservamos todos los derechos.
The reproduction, transmission or use of this document or its is not permitted without express written authority.
Offenders will be liable for damages. All rights, including rights created by patent grant or registration of a utility model or design, are reserved.

Documentation structur: Standard
Source file: KO050722.ODA

Rev.	Remarks	Date	Name	Date	22.07.2005	VSZ KOSICE	SIEMENS AG ISAOOLS	Substation control system 6MB
				Drawn	LANG			Numerical protection device:
				Appr.				Indications
				Norm		Orig./Repl. 1/Repl. by		Table

T = /BE 89
+
-S104
Page 89

Station:
Device EA19 7SJ511
Device type: 7SJ511
Function type: 7SJ511
Manufact.: SIEMENS

Packet number: 3
Version number: 0

Connection Device: EA19 EAG
Subrack: EA19 7SJ511
Module:
Comm. processor:
Channel connection
UART: 2
MUX:

Function type	Info number	Section	Bay	Logical device	Lower limit	Value text	Column section	Column bay	Column logical device	Column information	Column value text	Indication type	Entry in event list	Entry in alarm list	Acknowledge	Display in indication area	Indication class	Entry in SML	Display in diagram	Archive	Operational indications	Protection indications
	19	R110	EA19	7SJ511	NASTAVENIE LED ZOBR.		22	27	32	39	0	TR	O	N				N	N	R	N	Y
	22	R110	EA19	7SJ511	PARAMETRIZACIA OCHRANY	KON ZAC	22	27	32	39	75	SI	R/C	N				N	N	R/C	N	Y
	27	R110	EA19	7SJ511	ANWENDERDEF. MELDUNG 1	KON ZAC	22	27	32	39	75	SI	N	N				N	N	N		
	84	R110	EA19	7SJ511	NADPR.OCHR.GEN.POPUD	KON ZAC	22	27	32	39	78	SI	R/C	Y	R/C	Y	1	N	N	R/C	N	Y
	90	R110	EA19	7SJ511	NADPR.OCHR.VYP.IMP		22	27	32	39		TR	O	Y	O	Y	1	N	N	R	N	Y
	91	R110	EA19	7SJ511	SKRAT.OCHR.VYP.IMP.		22	27	32	39		TR	O	Y	O	Y	1	N	N	R	N	Y
60	1	R110	EA19	7SJ511	NADPR.OCHR.BLOK.I>>	KON ZAC	22	27	32	39	75	SI	R/C	N				N	N	R/C	N	Y
60	2	R110	EA19	7SJ511	NADPR.OCHR.BLOK.I>	KON ZAC	22	27	32	39	75	SI	R/C	N				N	N	R/C	N	Y
60	46	R110	EA19	7SJ511	SKRAT.OCHR.POPUD L1	KON ZAC	22	27	32	39	78	SI	R/C	Y	R/C	Y	1	N	N	R/C	N	Y
60	47	R110	EA19	7SJ511	SKRAT.OCHR.POPUD L2	KON ZAC	22	27	32	39	78	SI	R/C	Y	R/C	Y	1	N	N	R/C	N	Y
60	48	R110	EA19	7SJ511	SKRAT.OCHR.POPUD L3	KON ZAC	22	27	32	39	78	SI	R/C	Y	R/C	Y	1	N	N	R/C	N	Y
60	49	R110	EA19	7SJ511	SKRAT.OCHR.CAS		22	27	32	39		TR	O	Y	O	Y	1	N	N	R	N	Y
60	50	R110	EA19	7SJ511	NADPR.OCHR.POPUD L1	KON ZAC	22	27	32	39	78	SI	R/C	Y	R/C	Y	1	N	N	R/C	N	Y
60	51	R110	EA19	7SJ511	NADPR.OCHR.POPUD L2	KON ZAC	22	27	32	39	78	SI	R/C	Y	R/C	Y	1	N	N	R/C	N	Y
60	52	R110	EA19	7SJ511	NADPR.OCHR.POPUD L3	KON ZAC	22	27	32	39	78	SI	R/C	Y	R/C	Y	1	N	N	R/C	N	Y
60	53	R110	EA19	7SJ511	NADPR.OCHR.CAS		22	27	32	39		TR	O	Y	O	Y	1	N	N	R	N	Y
135	81	R110	EA19	7SJ511	OCHRANA PRIPRAVENA	KON ZAC	22	27	32	39	75	SI	R/C	N				N	N	R/C	N	Y
135	130	R110	EA19	7SJ511	BUFER SIGN. PREPLNENY		22	27	32	39	0	TR	O	N				N	N	R	N	Y
135	131	R110	EA19	7SJ511	STRATA SIGN. PRE LSA		22	27	32	39	0	TR	O	N				N	N	R	N	Y
135	231	R110	EA19	7SJ511	PORUCHA NAPAJ.OCHR.	KON ZAC	22	27	32	39	78	SI	R/C	Y	R/C	Y	1	N	N	R/C	N	Y
150	151	R110	EA19	7SJ511	SUM.POSOBENIE OCHR.		22	27	32	39	0	TR	O	Y	O	Y	1	N	N	R	N	Y
150	152	R110	EA19	7SJ511	SUM.ZRUS.POSOB.OCHR.		22	27	32	39	0	TR	O	Y	O	Y	1	N	N	R	N	Y
150	161	R110	EA19	7SJ511	SUM.GEN.VYP.IMPULZ		22	27	32	39	0	TR	O	Y	O	Y	1	N	N	R	N	Y
150	171	R110	EA19	7SJ511	VYPIN.PRUD. L1 I/In=		22	27	32	39	0	NV	O	Y	O	Y	1	N	N	R	N	Y
150	172	R110	EA19	7SJ511	VYPIN.PRUD. L2 I/In=		22	27	32	39	0	NV	O	Y	O	Y	1	N	N	R	N	Y
150	173	R110	EA19	7SJ511	VYPIN.PRUD. L3 I/In=		22	27	32	39	0	NV	O	Y	O	Y	1	N	N	R	N	Y
167	11	R110	EA19	7SJ511	O.PRETAZ. VYPNUTA	KON ZAC	22	27	32	39	78	SI	R/C	N				N	N	R/C	N	Y
167	12	R110	EA19	7SJ511	O.PRETAZ. BLOKOVANA	KON ZAC	22	27	32	39	78	SI	R/C	N				N	N	R/C	N	Y
167	15	R110	EA19	7SJ511	O.PRETAZ:PRUD.VYSTR	KON ZAC	22	27	32	39	78	SI	R/C	N				N	N	R/C	N	Y
167	16	R110	EA19	7SJ511	O.PRETAZ. TEPEL.VYSTR	KON ZAC	22	27	32	39	78	SI	R/C	N				N	N	R/C	N	Y
167	21	R110	EA19	7SJ511	O.PRETAZ. VYP.POVEL		22	27	32	39		SI	O	Y	O	Y	1	N	N	R	N	Y

Proprietary data, company confidential. All rights reserved.
Confia a etre da secret d'entreprise. Tous droits reservs.
Comunicado como segredo empresarial. Reservados todos os direitos.
Confiado como secreto industrial. Nos reservamos todos los derechos.
The reproduction, transmission or use of this document or its contents is not permitted without expres written authority. Offenders will be liable for damages. All rights, including rights created by patent grant or registration of a utility model or design, are reserved.

Documentation structur: Standard
Source file: KO050722.ODA

Date	22.07.2005	VSZ KOSICE	SIEMENS AG ISAOOLS	Substation control system 6MB
Drawn	LANG			Numerical protection device:
Appr.				Indications
Norm				Table

Remarks | Date | Name | Orig./Repl. 1/Repl. by

T = /BE 90
+
-S104
Page

Station:

Device EA19 7SJ511
Device type: 7SJ511
Function type: 7SJ511
Manufact.: SIEMENS

Packet number: 3
Version number: 0

Connection Device: EA19 EAG
Subrack: EA19 7SJ511
Module:
Comm. processor:
Channel connection
UART: 2
MUX:

Function type	Info number	Command derivation	Indication derivation	Tel ctrl FP/SC	Command output
	19			N	N
	22			N	N
	27		7SJ511 POSOBENIE PLAST OCHR	N	N
	84	Alarm 1 (Hupenbefehl)		N	N
	90	Alarm 1 (Hupenbefehl)		N	N
	91	Alarm 1 (Hupenbefehl)		N	N
60	1			N	N
60	2			N	N
60	46	Alarm 1 (Hupenbefehl)		N	N
60	47	Alarm 1 (Hupenbefehl)		N	N
60	48	Alarm 1 (Hupenbefehl)		N	N
60	49	Alarm 1 (Hupenbefehl)		N	N
60	50	Alarm 1 (Hupenbefehl)		N	N
60	51	Alarm 1 (Hupenbefehl)		N	N
60	52	Alarm 1 (Hupenbefehl)		N	N
60	53	Alarm 1 (Hupenbefehl)		N	N
135	81			N	N
135	130			N	N
135	131			N	N
135	231	Alarm 1 (Hupenbefehl)		N	N
150	151	Alarm 1 (Hupenbefehl)		N	N
150	152	Alarm 1 (Hupenbefehl)		N	N
150	161	Alarm 1 (Hupenbefehl)		N	N
150	171	Alarm 1 (Hupenbefehl)		N	N
150	172	Alarm 1 (Hupenbefehl)		N	N
150	173	Alarm 1 (Hupenbefehl)		N	N
167	11			N	N
167	12			N	N
167	15			N	N
167	16			N	N
167	21	Alarm 1 (Hupenbefehl)		N	N

Proprietary data, company confidential. All rights reserved.
Confie a titre de secret d'entreprise. Tous droits reservés.
Comunicado como segredo empresarial. Reservados todos os direitos.
Confiado como secreto industrial. Nos reservamos todos los derechos.
The reproduction, transmission or use of this document or its is not permitted without express written authority.
Offenders will be liable for damages. All rights, including rights created by patent grant or registration of a utility model or design, are reserved.

Documentation structur: Standard
Source file: KO050722.ODA

Rev.	Remarks	Date	Name	Date	22.07.2005	VSZ KOSICE	SIEMENS AG SAOOLS	Substation control system 6MB Numerical protection device: Indications Table	T = /BE 91 + -S104 Page 91
				Drawn	LANG				
				Appr.					
				Norm		Orig./Repl. 1/Repl. by			

Station:
Device EA20 7SD502
Device type: 7SD502/503
Function type: 7SD502/503
Manufact.: SIEMENS

Packet number: 3
Version number: 0

Connection Device: EA20 EAG
Subrack: EA20 7SD502
Module:
Comm. processor:
Channel connection
UART: 2
MUX:

Function type	Info number	Section	Bay	Logical device	Lower limit	Value text	Column section	Column bay	Column logical device	Column information	Column value text	Indication type	Entry in event list	Entry in alarm list	Acknowledge	Display in indication area	Indication class	Entry in SML	Display in diagram	Archive	Operational indications	Protection indications	Command derivation	Tel ctrl FP/SC	Command output
	19	R110	EA20	7SD502	NASTAVENIE LED ZOBR.		22	27	32	39	0	TR	O	N				N	N	R	N	Y		N	N
	22	R110	EA20	7SD502	PARAMETRIZACIA OCHRANY	KON ZAC	22	27	32	39	75	SI	R/C	N				N	N	R/C	N	Y		N	N
	23	R110	EA20	7SD502	PARAMETRIZ.AKT.SADA A	KON ZAC	22	27	32	39	75	SI	R/C	N				N	N	R/C	N	Y		N	N
	24	R110	EA20	7SD502	PARAMETRIZ.AKT.SADA B	KON ZAC	22	27	32	39	75	SI	R/C	N				N	N	R/C	N	Y		N	N
	25	R110	EA20	7SD502	PARAMETRIZ.AKT.SADA C	KON ZAC	22	27	32	39	75	SI	R/C	N				N	N	R/C	N	Y		N	N
	26	R110	EA20	7SD502	PARAMETRIZ.AKT.SADA D	KON ZAC	22	27	32	39	75	SI	R/C	N				N	N	R/C	N	Y		N	N
	27	R110	EA20	7SD502	POSOBENIE PLAST.OCHR	KON ZAC	22	27	32	39	75	SI	N	N				N	N	N				N	N
	68	R110	EA20	7SD502	DIF.O: VYP ST.IDIFF>		22	27	32	39		TR	O	Y	O	Y	1	N	N	R	N	Y	Alarm 1 (Hupenbefehl)	N	N
	84	R110	EA20	7SD502	DIF.O:GEN.POPUD	KON ZAC	22	27	32	39	78	SI	R/C	Y	R/C	Y	1	N	N	R/C	N	Y	Alarm 1 (Hupenbefehl)	N	N
51	111	R110	EA20	7SD502	VAZBA JE VYPNUTA	KON ZAC	22	27	32	39	75	SI	R/C	N				N	N	R/C	N	Y		N	N
51	113	R110	EA20	7SD502	VAZBA V CINNOSTI	KON ZAC	22	27	32	39	75	SI	R/C	N				N	N	R/C	N	Y		N	N
51	117	R110	EA20	7SD502	VAZBA VYP. IMPULZ	KON ZAC	22	27	32	39	78	SI	R/C	N				N	N	R/C	N	Y		N	N
62	6	R110	EA20	7SD502	REZ.BLOK.STUP.I>>	KON ZAC	22	27	32	39	75	SI	R/C	N				N	N	R/C	N	Y		N	N
62	7	R110	EA20	7SD502	REZ.BLOK.STUP.I>/Ip	KON ZAC	22	27	32	39	75	SI	R/C	N				N	N	R/C	N	Y		N	N
62	103	R110	EA20	7SD502	REZ. V. CINNOSTI	KON ZAC	22	27	32	39	75	SI	R/C	N				N	N	R/C	N	Y		N	N
62	111	R110	EA20	7SD502	REZ.GEN.POPUD		22	27	32	39		TR	O	Y	O	Y	1	N	N	R	N	Y	Alarm 1 (Hupenbefehl)	N	N
62	121	R110	EA20	7SD502	REZ.POPUD I>>		22	27	32	39		TR	O	Y	O	Y	1	N	N	R	N	Y	Alarm 1 (Hupenbefehl)	N	N
62	122	R110	EA20	7SD502	REZ.POPUD I>/Ip		22	27	32	39		TR	O	Y	O	Y	1	N	N	R	N	Y	Alarm 1 (Hupenbefehl)	N	N
62	141	R110	EA20	7SD502	REZ.SKRAT.CAS		22	27	32	39		TR	O	Y	O	Y	1	N	N	R	N	Y	Alarm 1 (Hupenbefehl)	N	N
62	142	R110	EA20	7SD502	REZ.NADPR.CAS		22	27	32	39		TR	O	Y	O	Y	1	N	N	R	N	Y	Alarm 1 (Hupenbefehl)	N	N
62	151	R110	EA20	7SD502	REZ.GEN.VYP.IMPULZ		22	27	32	39		TR	O	Y	O	Y	1	N	N	R	N	Y	Alarm 1 (Hupenbefehl)	N	N
92	17	R110	EA20	7SD502	DIF.O:V CINNOSTI	KON ZAC	22	27	32	39	75	SI	R/C	N				N	N	R/C	N	Y		N	N
93	11	R110	EA20	7SD502	DIAL.VYPINANIE VYPNUTE	KON ZAC	22	27	32	39	75	SI	R/C	N				N	N	R/C	N	Y		N	N
93	16	R110	EA20	7SD502	DIAL.VYP.IMP.VYSLANY	KON ZAC	22	27	32	39	75	SI	R/C	N				N	N	R/C	N	Y		N	N
93	41	R110	EA20	7SD502	VYP.PROTIST:VYPNUTE	KON ZAC	22	27	32	39	75	SI	R/C	N				N	N	R/C	N	Y		N	N
93	43	R110	EA20	7SD502	VYP.PROTIST.V.CINNOSTI	KON ZAC	22	27	32	39	75	SI	R/C	N				N	N	R/C	N	Y		N	N
93	46	R110	EA20	7SD502	VYP.PROTIS:POPUD	KON ZAC	22	27	32	39	78	SI	R/C	Y	R/C	Y	1	N	N	R/C	N	Y	Alarm 1 (Hupenbefehl)	N	N
93	47	R110	EA20	7SD502	VYP.PROTIS:VYP.IMP	KON ZAC	22	27	32	39	78	SI	R/C	Y	R/C	Y	1	N	N	R/C	N	Y	Alarm 1 (Hupenbefehl)	N	N
93	71	R110	EA20	7SD502	KONTR.PREN.CES.VYPNUTA	KON ZAC	22	27	32	39	75	SI	R/C	N				N	N	R/C	N	Y		N	N
93	76	R110	EA20	7SD502	POR.POM.PRENOS.CESTY	KON ZAC	22	27	32	39	75	SI	R/C	N				N	N	R/C	N	Y		N	N
135	81	R110	EA20	7SD502	OCHRANA PRIPRAVENA	KON ZAC	22	27	32	39	75	SI	R/C	N				N	N	R/C	N	Y		N	N
135	130	R110	EA20	7SD502	BUFER SIGN. PREPLNENY		22	27	32	39	0	TR	O	N				N	N	R	N	Y		N	N

Proprietary data, company confidential. All rights reserved
Confia a titra de secret d'entreprise. Tous droits reservés.
Comunicado como segredo empresarial. Reservados todos os direitos.
Confiado como secreto industrial. Nos reservamos todos los derechos.
The reproduction, transmission or use of this document or its contents is not permitted without express written authority. Offenders will be liable for damages. All rights, including rights created by patent grant or registration of a utility model or design, are reserved.

Documentation structure: Standard
Source file: KO050722.ODA

Date	22.07.2005	VSZ KOSICE	SIEMENS AG ISAOOLS	Substation control system 6MB
Drawn	LANG			Numerical protection device:
Appr.				Indications
Remarks	Date	Name Norm	Orig./Repl. 1/Repl. by	Table

T = /BE 92
+
-S104
Page 92

Station:

Device EA20 7SD502
Device type: 7SD502/503
Function type: 7SD502/503
Manufact.: SIEMENS

Packet number: 3
Version number: 0

Connection Device: EA20 EAG
Subrack: EA20 7SD502
Module:
Comm. processor:
Channel connection
UART: 2
MUX:

Function type	Info number	Section	Bay	Logical device	Lower limit	Value text	Column section	Column bay	Column logical device	Column information	Column value text	Indication type	Entry in event list	Entry in alarm list	Acknowledge	Display in indication area	Indication class	Entry in SML	Display in diagram	Archive	Operational indications	Protection indications	Command derivation	Tel ctrl FP/SC	Command output
135	131	R110	EA20	7SD502	STRATA SIGN. PRE LSA		22	27	32	39	0	TR	O	N				N	N	R	N	Y		N	N
135	166	R110	EA20	7SD502	PORUCHA V/V JEDN.C.1	KON ZAC	22	27	32	39	75	SI	R/C	N				N	N	R/C	N	Y		N	N
135	170	R110	EA20	7SD502	PORUCHA V/V JEDNOTKY	KON ZAC	22	27	32	39	75	SI	R/C	N				N	N	R/C	N	Y		N	N
135	231	R110	EA20	7SD502	PORUCHA NAPAJ.OCHR.	KON ZAC	22	27	32	39	78	SI	R/C	Y	R/C	Y	1	N	N	R/C	N	Y	Alarm 1 (Hupenbefehl)	N	N
150	152	R110	EA20	7SD502	SUM.ZRUS.POSOB.OCHR.		22	27	32	39	0	TR	O	Y	O	Y	1	N	N	R	N	Y	Alarm 1 (Hupenbefehl)	N	N
150	161	R110	EA20	7SD502	SUM.GEN.VYP.IMPULZ		22	27	32	39	0	TR	O	Y	O	Y	1	N	N	R	N	Y	Alarm 1 (Hupenbefehl)	N	N
167	13	R110	EA20	7SD502	O.PRETAZ:V CINNOSTI	KON ZAC	22	27	32	39	75	SI	R/C	N				N	N	R/C	N	Y		N	N
167	15	R110	EA20	7SD502	O.PRETAZ:PRUD.VYSTR	KON ZAC	22	27	32	39	75	SI	R/C	N				N	N	R/C	N	Y		N	N
167	16	R110	EA20	7SD502	O.PRETAZ:TEPEL.VYSTR.	KON ZAC	22	27	32	39	75	SI	R/C	N				N	N	R/C	N	Y		N	N
167	17	R110	EA20	7SD502	O.PRETAZ:POPUD	KON ZAC	22	27	32	39	75	SI	R/C	N				N	N	R/C	N	Y		N	N
167	21	R110	EA20	7SD502	O.PRETAZ:VYP.POVEL		22	27	32	39		TR	O	Y	O	Y	1	N	N	R	N	Y	Alarm 1 (Hupenbefehl)	N	N

Proprietary data, company confidential. All rights reserved.
Confie a titre de secret d'entreprise. Tous droits réservés.
Comunicado como segredo empresarial. Reservados todos os direitos.
Confiado como secreto industrial. Nos reservamos todos los derechos.

The reproduction, transmission or use of this document or its is not permitted without express written authority.
Offenders will be liable for damages. All rights, including rights created by patent grant or registration of a utility model or design, are reserved.

Documentation structur: Standard
Source file: KO050722.ODA

Rev.	Remarks	Date	Name	Date	22.07.2005	VSZ KOSICE	SIEMENS AG ISAOOLS	Substation control system 6MB
				Drawn	LANG			Numerical protection device:
				Appr.				Indications
				Norm		Orig./Repl. 1/Repl. by		Table

T = /BE 93
+
-S104
Page 93

Proprietary data, company confidential. All rights reserved
Confia a ifra de secret d'entreprise. Tous droits reservis.
Comunicado como segredo empresarial. Reservados todos os direitos.
Confiado como secreto industrial. Nos reservamos todos los derechos.
The reproduction, transmission or use of this document or its is not permitted without expres written authority.
Offenders will be liable for damages. All rights, including rights created by patent grant or registration of a utility model or design, are reserved

Station:

Device EA20 7SJ511
Device type: 7SJ511
Function type: 7SJ511
Manufact.: SIEMENS

Packet number: 3
Version number: 0

Connection Device: EA20 EAG
Subrack: EA20 7SJ511
Module:
Comm. processor:
Channel connection
UART: 2
MUX:

Function type	Info number	Section	Bay	Logical device	Lower limit	Value text	Column section	Column bay	Column logical device	Column information	Column value text	Indication type	Entry in event list	Entry in alarm list	Acknowledge	Display in indication area	Indication class	Entry in SML	Display in diagram	Archive	Operational indications	Protection indications
	19	R110	EA20	7SJ511	NASTAVENIE LED ZOBR.		22	27	32	39	0	TR	O	N				N	N	R	N	Y
	22	R110	EA20	7SJ511	PARAMETRIZACIA OCHRANY	KON ZAC	22	27	32	39	75	SI	R/C	N				N	N	R/C	N	Y
	27	R110	EA20	7SJ511	ANWENDERDEF. MELDUNG 1	KON ZAC	22	27	32	39	75	SI	N	N				N	N	N		
	84	R110	EA20	7SJ511	NADPR.OCHR.GEN.POPUD	KON ZAC	22	27	32	39	78	SI	R/C	Y	R/C	Y	1	N	N	R/C	N	Y
	90	R110	EA20	7SJ511	NADPR.OCHR.VYP.IMP		22	27	32	39		TR	O	Y	O	Y	1	N	N	R	N	Y
	91	R110	EA20	7SJ511	SKRAT.OCHR.VYP.IMP.		22	27	32	39		TR	O	Y	O	Y	1	N	N	R	N	Y
60	1	R110	EA20	7SJ511	NADPR.OCHR.BLOK.I>>	KON ZAC	22	27	32	39	75	SI	R/C	N				N	N	R/C	N	Y
60	2	R110	EA20	7SJ511	NADPR.OCHR.BLOK.I>	KON ZAC	22	27	32	39	75	SI	R/C	N				N	N	R/C	N	Y
60	46	R110	EA20	7SJ511	SKRAT.OCHR.POPUD L1	KON ZAC	22	27	32	39	78	SI	R/C	Y	R/C	Y	1	N	N	R/C	N	Y
60	47	R110	EA20	7SJ511	SKRAT.OCHR.POPUD L2	KON ZAC	22	27	32	39	78	SI	R/C	Y	R/C	Y	1	N	N	R/C	N	Y
60	48	R110	EA20	7SJ511	SKRAT.OCHR.POPUD L3	KON ZAC	22	27	32	39	78	SI	R/C	Y	R/C	Y	1	N	N	R/C	N	Y
60	49	R110	EA20	7SJ511	SKRAT.OCHR.CAS		22	27	32	39		TR	O	Y	O	Y	1	N	N	R	N	Y
60	50	R110	EA20	7SJ511	NADPR.OCHR.POPUD L1	KON ZAC	22	27	32	39	78	SI	R/C	Y	R/C	Y	1	N	N	R/C	N	Y
60	51	R110	EA20	7SJ511	NADPR.OCHR.POPUD L2	KON ZAC	22	27	32	39	78	SI	R/C	Y	R/C	Y	1	N	N	R/C	N	Y
60	52	R110	EA20	7SJ511	NADPR.OCHR.POPUD L3	KON ZAC	22	27	32	39	78	SI	R/C	Y	R/C	Y	1	N	N	R/C	N	Y
60	53	R110	EA20	7SJ511	NADPR.OCHR.CAS		22	27	32	39		TR	O	Y	O	Y	1	N	N	R	N	Y
135	81	R110	EA20	7SJ511	OCHRANA PRIPRAVENA	KON ZAC	22	27	32	39	75	SI	R/C	N				N	N	R/C	N	Y
135	130	R110	EA20	7SJ511	BUFER SIGN. PREPLNENY		22	27	32	39	0	TR	O	N				N	N	R	N	Y
135	131	R110	EA20	7SJ511	STRATA SIGN. PRE LSA		22	27	32	39	0	TR	O	N				N	N	R	N	Y
135	231	R110	EA20	7SJ511	PORUCHA NAPAJ.OCHR.	KON ZAC	22	27	32	39	78	SI	R/C	Y	R/C	Y	1	N	N	R/C	N	Y
150	151	R110	EA20	7SJ511	SUM.POSOBENIE OCHR.		22	27	32	39	0	TR	O	Y	O	Y	1	N	N	R	N	Y
150	152	R110	EA20	7SJ511	SUM.ZRUS.POSOB.OCHR.		22	27	32	39	0	TR	O	Y	O	Y	1	N	N	R	N	Y
150	161	R110	EA20	7SJ511	SUM.GEN.VYP.IMPULZ		22	27	32	39	0	TR	O	Y	O	Y	1	N	N	R	N	Y
150	171	R110	EA20	7SJ511	VYPIN.PRUD. L1 I/In=		22	27	32	39	0	NV	O	Y	O	Y	1	N	N	R	N	Y
150	172	R110	EA20	7SJ511	VYPIN.PRUD. L2 I/In=		22	27	32	39	0	NV	O	Y	O	Y	1	N	N	R	N	Y
150	173	R110	EA20	7SJ511	VYPIN.PRUD. L3 I/In=		22	27	32	39	0	NV	O	Y	O	Y	1	N	N	R	N	Y
167	11	R110	EA20	7SJ511	O.PRETAZ. VYPNUTA	KON ZAC	22	27	32	39	78	SI	R/C	N				N	N	R/C	N	Y
167	12	R110	EA20	7SJ511	O.PRETAZ. BLOKOVANA	KON ZAC	22	27	32	39	78	SI	R/C	N				N	N	R/C	N	Y
167	15	R110	EA20	7SJ511	O.PRETAZ:PRUD.VYSTR	KON ZAC	22	27	32	39	78	SI	R/C	N				N	N	R/C	N	Y
167	16	R110	EA20	7SJ511	O.PRETAZ. TEPEL.VYSTR	KON ZAC	22	27	32	39	78	SI	R/C	N				N	N	R/C	N	Y
167	21	R110	EA20	7SJ511	O.PRETAZ. VYP.POVEL		22	27	32	39		SI	O	Y	O	Y	1	N	N	R	N	Y

Documentation structur: Standard
Source file: KO050722.ODA

Date	22.07.2005	VSZ KOSICE	SIEMENS AG ISATOOLS
Drawn	LANG		
Appr.			
Norm			

Substation control system 6MB
Numerical protection device:
Indications
Table

T = /BE 94
+
-S104
Page

R Remarks Date Name Orig./Repl. 1/Repl. by

Proprietary data, company confidential. All rights reserved.
Confia a titre de secret d'entreprise. Tous droits réservés.
Comunicado como segredo empresarial. Reservados todos os direitos.
Contiado como secreto industrial. Nos reservamos todos los derechos.

The reproduction, transmission or use of this document or its contents is not permitted without expres written authority. Offenders will be liable for damages. All rights, including rights created by patent grant or registration of a utility model or design, are reserved.

Documentation structur: Standard
Source file: KO050722.ODA

Station:
Device EA20 7SJ511
Device type: 7SJ511
Function type: 7SJ511
Manufact.: SIEMENS

Packet number: 3
Version number: 0

Connection Device: EA20 EAG
Subrack: EA20 7SJ511
Module:
Comm. processor:
Channel connection
UART: 2
MUX:

Function type	Info number	Command derivation	Indication derivation	Tel ctrl FP/SC	Command output
	19			N	N
	22			N	N
	27		7SJ511 POSOBENIE PLAST OCHR	N	N
	84	Alarm 1 (Hupenbefehl)		N	N
	90	Alarm 1 (Hupenbefehl)		N	N
	91	Alarm 1 (Hupenbefehl)		N	N
60	1			N	N
60	2			N	N
60	46	Alarm 1 (Hupenbefehl)		N	N
60	47	Alarm 1 (Hupenbefehl)		N	N
60	48	Alarm 1 (Hupenbefehl)		N	N
60	49	Alarm 1 (Hupenbefehl)		N	N
60	50	Alarm 1 (Hupenbefehl)		N	N
60	51	Alarm 1 (Hupenbefehl)		N	N
60	52	Alarm 1 (Hupenbefehl)		N	N
60	53	Alarm 1 (Hupenbefehl)		N	N
135	81			N	N
135	130			N	N
135	131			N	N
135	231	Alarm 1 (Hupenbefehl)		N	N
150	151	Alarm 1 (Hupenbefehl)		N	N
150	152	Alarm 1 (Hupenbefehl)		N	N
150	161	Alarm 1 (Hupenbefehl)		N	N
150	171	Alarm 1 (Hupenbefehl)		N	N
150	172	Alarm 1 (Hupenbefehl)		N	N
150	173	Alarm 1 (Hupenbefehl)		N	N
167	11			N	N
167	12			N	N
167	15			N	N
167	16			N	N
167	21	Alarm 1 (Hupenbefehl)		N	N

Proprietary data, company confidential. All rights reserved
Confidencial de secreto de empresa. Todos os direitos reservados
Confidencial de secreto de empresa. Reservados todos os direitos.
Confidencial como secreto industrial. Nos reservamos todos los derechos.
The reproduction, transmission or use of this document or its contents is not permitted without expres written authority.
Offenders will be liable for damages. All rights, including rights created by patent grant or registration of a utility model or design, are reserved.

Station:

Device: EA21 7SD610
Device type: 7SD610
Function type: 7SD610
Manufact.: SIEMENS

Packet number: 4
Version number: 0

Connection Device: EA21 EAG
Subrack: EA21 7SD610
Module:
Comm. processor:
Channel connection
UART: 2
MUX:

Function type	Info number	Section	Bay	Logical device	Lower limit	Value text	Column section	Column bay	Column logical device	Column information	Column value text	Indication type	Entry in event list	Entry in alarm list	Acknowledge	Display in indication area	Indication class	Entry in SML	Display in diagram	Archive	Operational indications	Protection indications	Command derivation	Tel ctrl FP/SC	Command output
		R110	EA21	7SD610	NASTAVENIE LED ZOBR.		22	27	32	39	0	TR	O	N				N	N	R	N	Y		N	N
	22	R110	EA21	7SD610	PARAMETRIZACIA OCHRANY	KON ZAC	22	27	32	39	75	SI	R/C	N				N	N	R/C	N	Y		N	N
	23	R110	EA21	7SD610	PARAMETRIZ.AKT.SADA A	KON ZAC	22	27	32	39	75	SI	R/C	N				N	N	R/C	N	Y		N	N
	24	R110	EA21	7SD610	PARAMETRIZ.AKT.SADA B	KON ZAC	22	27	32	39	75	SI	R/C	N				N	N	R/C	N	Y		N	N
	25	R110	EA21	7SD610	PARAMETRIZ.AKT.SADA C	KON ZAC	22	27	32	39	75	SI	R/C	N				N	N	R/C	N	Y		N	N
	26	R110	EA21	7SD610	PARAMETRIZ.AKT.SADA D	KON ZAC	22	27	32	39	75	SI	R/C	N				N	N	R/C	N	Y		N	N
	68	R110	EA21	7SD610	SUM.GEN.VYP.IMPULZ		22	27	32	39		TR	O	Y	O	Y	1	N	N	R	N	Y	Alarm 1 (Hupenbefehl)	N	N
1	1	R110	EA21	7SD610	VYP.PROTIS:POPUD L1	KON ZAC	22	27	32	39	78	SI	R/C	Y	R/C	Y	1	N	N	R/C	N	Y	Alarm 1 (Hupenbefehl)	N	N
1	2	R110	EA21	7SD610	VYP.PROTIS:POPUD L2	KON ZAC	22	27	32	39	78	SI	R/C	Y	R/C	Y	1	N	N	R/C	N	Y	Alarm 1 (Hupenbefehl)	N	N
1	3	R110	EA21	7SD610	VYP.PROTIS:POPUD L3	KON ZAC	22	27	32	39	78	SI	R/C	Y	R/C	Y	1	N	N	R/C	N	Y	Alarm 1 (Hupenbefehl)	N	N
1	4	R110	EA21	7SD610	VYP.PROTIS:VYP.IMP	KON ZAC	22	27	32	39	78	SI	R/C	Y	R/C	Y	1	N	N	R/C	N	Y	Alarm 1 (Hupenbefehl)	N	N
1	5	R110	EA21	7SD610	DIF.O:GEN.POPUD	KON ZAC	22	27	32	39	78	SI	R/C	Y	R/C	Y	1	N	N	R/C	N	Y	Alarm 1 (Hupenbefehl)	N	N
51	21	R110	EA21	7SD610	VAZBA JE VYPNUTA	KON ZAC	22	27	32	39	75	SI	R/C	N				N	N	R/C	N	Y		N	N
51	35	R110	EA21	7SD610	VAZBA VYP. IMPULZ		22	27	32	39		TR	O	N				N	N	R	N	Y		N	N
64	4	R110	EA21	7SD610	REZ.BLOK.STUP.I>>	KON ZAC	22	27	32	39	75	SI	R/C	N				N	N	R/C	N	Y		N	N
64	5	R110	EA21	7SD610	REZ.BLOK.STUP.I>	KON ZAC	22	27	32	39	75	SI	R/C	N				N	N	R/C	N	Y		N	N
64	6	R110	EA21	7SD610	REZ.BLOK.STUP.Ip	KON ZAC	22	27	32	39	75	SI	R/C	N				N	N	R/C	N	Y		N	N
64	53	R110	EA21	7SD610	REZ. V. CINNOSTI	KON ZAC	22	27	32	39	75	SI	R/C	N				N	N	R/C	N	Y		N	N
64	61	R110	EA21	7SD610	REZ.GEN.POPUD		22	27	32	39		TR	O	Y	O	Y	1	N	N	R	N	Y	Alarm 1 (Hupenbefehl)	N	N
64	91	R110	EA21	7SD610	REZ.POPUD I>>		22	27	32	39		TR	O	Y	O	Y	1	N	N	R	N	Y	Alarm 1 (Hupenbefehl)	N	N
64	92	R110	EA21	7SD610	REZ.POPUD I>		22	27	32	39		TR	O	Y	O	Y	1	N	N	R	N	Y	Alarm 1 (Hupenbefehl)	N	N
64	93	R110	EA21	7SD610	REZ.POPUD Ip		22	27	32	39		TR	O	Y	O	Y	1	N	N	R	N	Y	Alarm 1 (Hupenbefehl)	N	N
64	111	R110	EA21	7SD610	REZ.GEN.VYP.IMPULZ		22	27	32	39		TR	O	Y	O	Y	1	N	N	R	N	Y	Alarm 1 (Hupenbefehl)	N	N
64	121	R110	EA21	7SD610	REZ.SKRAT.CAS		22	27	32	39		TR	O	Y	O	Y	1	N	N	R	N	Y	Alarm 1 (Hupenbefehl)	N	N
64	122	R110	EA21	7SD610	REZ.NADPR.CAS		22	27	32	39		TR	O	Y	O	Y	1	N	N	R	N	Y	Alarm 1 (Hupenbefehl)	N	N
64	123	R110	EA21	7SD610	REZ.NADPR.CAS Ip		22	27	32	39		TR	O	Y	O	Y	1	N	N	R	N	Y	Alarm 1 (Hupenbefehl)	N	N
92	92	R110	EA21	7SD610	DIF.O:V CINNOSTI	KON ZAC	22	27	32	39	75	SI	R/C	N				N	N	R/C	N	Y		N	N
92	99	R110	EA21	7SD610	DIF.O: VYP ST.IDIFF>		22	27	32	39		TR	O	Y	O	Y	1	N	N	R	N	Y	Alarm 1 (Hupenbefehl)	N	N
135	81	R110	EA21	7SD610	OCHRANA PRIPRAVENA	KON ZAC	22	27	32	39	75	SI	R/C	N				N	N	R/C	N	Y		N	N
135	130	R110	EA21	7SD610	BUFER SIGN. PREPLNENY		22	27	32	39	0	TR	O	N				N	N	R	N	Y		N	N
135	171	R110	EA21	7SD610	PORUCHA V/V JEDN.C.1	KON ZAC	22	27	32	39	75	SI	R/C	N				N	N	R/C	N	Y		N	N
135	172	R110	EA21	7SD610	PORUCHA V/V JEDN.C.2	KON ZAC	22	27	32	39	75	SI	R/C	N				N	N	R/C	N	Y		N	N

Documentation structure: Standard
Source file: KO050722.ODA

Date	22.07.2005	VSZ KOSICE	SIEMENS AG ISATOOLS
Drawn	LANG		
Appr.			
Norm			
Remarks	Date	Name	Orig./Repl. 1/Repl. by

Substation control system 6MB
Numerical protection device:
Indications
Table

T = /BE 96
+
-S104
Page 96

Proprietary data, company confidential. All rights reserved
Confiaetitre da secret d'entreprise. Tous droits reservs.
Comunicado como segredo empresarial. Reservados todos os direitos.
Confiado como secreto industrial. Nos reservamos todos los derechos.
The reproduction, transmission or use of this document or its
is not permitted without express written authority
Offenders will be liable for damages. All rights, including rights
created by patent grant or registration of a utility model or design, are reserved

Station:
Device EA21 7SD610
Device type: 7SD610
Function type: 7SD610
Manufact.: SIEMENS

Packet number: 4
Version number: 0

Connection Device: EA21 EAG
Subrack: EA21 7SD610
Module:
Comm. processor:
Channel connection
UART: 2
MUX:

Function type	Info number	Section	Bay	Logical device	Lower limit	Value text	Column section	Column bay	Column logical device	Column information	Column value text	Indication type	Entry in event list	Entry in alarm list	Acknowledge	Display in indication area	Indication class	Entry in SML	Display in diagram	Archive	Operational indications	Protection indications	Command derivation	Tel ctrl FP/SC	Command output
135	173	R110	EA21	7SD610	PORUCHA V/V JEDN.C.3	KON ZAC	22	27	32	39	75	SI	R/C	N				N	N	R/C	N	Y		N	N
135	174	R110	EA21	7SD610	PORUCHA V/V JEDN.C.4	KON ZAC	22	27	32	39	75	SI	R/C	N				N	N	R/C	N	Y		N	N
135	175	R110	EA21	7SD610	PORUCHA V/V JEDN.C.5	KON ZAC	22	27	32	39	75	SI	R/C	N				N	N	R/C	N	Y		N	N
135	176	R110	EA21	7SD610	PORUCHA V/V JEDN.C.6	KON ZAC	22	27	32	39	75	SI	R/C	N				N	N	R/C	N	Y		N	N
135	177	R110	EA21	7SD610	PORUCHA V/V JEDN.C.7	KON ZAC	22	27	32	39	75	SI	R/C	N				N	N	R/C	N	Y		N	N
135	210	R110	EA21	7SD610	PORUCHA V/V JEDN.C.0	KON ZAC	22	27	32	39	75	SI	R/C	N				N	N	R/C	N	Y		N	N
135	231	R110	EA21	7SD610	PORUCHA NAPAJ.OCHR.	KON ZAC	22	27	32	39	78	SI	R/C	Y	R/C	Y	1	N	N	R/C	N	Y	Alarm 1 (Hupenbefehl)	N	N
167	13	R110	EA21	7SD610	O.PRETAZ:V CINNOSTI	KON ZAC	22	27	32	39	75	SI	R/C	N				N	N	R/C	N	Y		N	N
167	15	R110	EA21	7SD610	O.PRETAZ:PRUD.VYSTR	KON ZAC	22	27	32	39	75	SI	R/C	N				N	N	R/C	N	Y		N	N
167	16	R110	EA21	7SD610	O.PRETAZ:TEPEL.VYSTR.	KON ZAC	22	27	32	39	75	SI	R/C	N				N	N	R/C	N	Y		N	N
167	17	R110	EA21	7SD610	O.PRETAZ:POPUD	KON ZAC	22	27	32	39	75	SI	R/C	N				N	N	R/C	N	Y		N	N
167	21	R110	EA21	7SD610	O.PRETAZ:VYP.POVEL		22	27	32	39		TR	O	Y	O	Y	1	N	N	R	N	Y	Alarm 1 (Hupenbefehl)	N	N

Documentation structur: Standard
Source file: K0050722.ODA

Rev.	Remarks	Date	Name	Norm	
				Date	22.07.2005
				Drawn	LANG
				Appr.	

VSZ
KOSICE

Orig./Repl. 1/Repl. by

SIEMENS AG
ISAOOLS

Substation control system 6MB
Numerical protection device:
Indications
Table

T = /BE 97
+
-S104
Page 97

Proprietary data, company confidential. All rights reserved
Confia a ltrie de secret dentreprise. Tous droits reserva
Comunicado como segredo empresarial. Reservados todos os direitos.
Confiado como secreto industrial. Nos reservamos todos los derechos.
The reproduction, transmission or use of this document or its
is not permitted without expres written authority.
Offenders will be liable for damages. All rights, including rights
created by patent grant or registration of a utility model or design, are reserved

Station:

Device EA21 7SJ612
Device type: 7SJ61
Function type: 7
Manufact.: SIEMENS

Packet number: 4
Version number: 0

Connection Device: EA21 EAG
Subrack: EA21 7SJ612
Module:
Comm. processor:
Channel connection
UART: 2
MUX:

Function type	Info number	Section	Bay	Logical device	Lower limit	Value text	Column section	Column bay	Column logical device	Column information	Column value text	Indication type	Entry in event list	Entry in alarm list	Acknowledge	Display in indication area	Indication class	Entry in SML	Display in diagram	Archive	Operational indications	Protection indications	Command derivation	Tel ctrl FP/SC	Command output
	22	R110	EA21	7SJ612	PARAMETRIZACIA OCHRANY	KON ZAC	22	27	32	39	75	SI	R/C	N				N	N	R/C	N	Y		N	N
	32	R110	EA21	7SJ612	PORUCHA MER. PRUDU	KON ZAC	22	27	32	39	75	SI	R/C	N				N	N	R/C	N	Y		N	N
	64	R110	EA21	7SJ612	NADPR.OCHR. POPUD L1	KON ZAC	22	27	32	39	78	SI	R/C	Y	R/C	Y	1	N	N	R/C	N	Y	Alarm 1 (Hupenbefehl)	N	N
	65	R110	EA21	7SJ612	NADPR.OCHR. POPUD L2	KON ZAC	22	27	32	39	78	SI	R/C	Y	R/C	Y	1	N	N	R/C	N	Y	Alarm 1 (Hupenbefehl)	N	N
	66	R110	EA21	7SJ612	NADPR.OCHR. POPUD L3	KON ZAC	22	27	32	39	78	SI	R/C	Y	R/C	Y	1	N	N	R/C	N	Y	Alarm 1 (Hupenbefehl)	N	N
	68	R110	EA21	7SJ612	NADPR.O.GEN.VYP.IMP		22	27	32	39		TR	O	Y	O	Y	1	N	N	R	N	Y	Alarm 1 (Hupenbefehl)	N	N
	84	R110	EA21	7SJ612	NADPR.OCHR.GEN.POPUD	KON ZAC	22	27	32	39	78	SI	R/C	Y	R/C	Y	1	N	N	R/C	N	Y	Alarm 1 (Hupenbefehl)	N	N
	90	R110	EA21	7SJ612	NADPR.OCHR.VYP.IMP2		22	27	32	39		TR	O	N				N	N	N				N	N
	91	R110	EA21	7SJ612	SKRAT.OCHR.VYP.IMP.		22	27	32	39		TR	O	Y	O	Y	1	N	N	R	N	Y	Alarm 1 (Hupenbefehl)	N	N
1	1	R110	EA21	7SJ612	PORUCHA V/V JEDN.C.1	KON ZAC	22	27	32	39	75	SI	R/C	N				N	N	R/C	N	Y		N	N
1	2	R110	EA21	7SJ612	PORUCHA V/V JEDN.C.2	KON ZAC	22	27	32	39	75	SI	R/C	N				N	N	R/C	N	Y		N	N
1	3	R110	EA21	7SJ612	PORUCHA V/V JEDN.C.3	KON ZAC	22	27	32	39	75	SI	R/C	N				N	N	R/C	N	Y		N	N
1	4	R110	EA21	7SJ612	PORUCHA V/V JEDN.C.4	KON ZAC	22	27	32	39	75	SI	R/C	N				N	N	R/C	N	Y		N	N
1	5	R110	EA21	7SJ612	PORUCHA V/V JEDN.C.5	KON ZAC	22	27	32	39	75	SI	R/C	N				N	N	R/C	N	Y		N	N
1	6	R110	EA21	7SJ612	PORUCHA V/V JEDN.C.6	KON ZAC	22	27	32	39	75	SI	R/C	N				N	N	R/C	N	Y		N	N
1	7	R110	EA21	7SJ612	PORUCHA V/V JEDN.C.7	KON ZAC	22	27	32	39	75	SI	R/C	N				N	N	R/C	N	Y		N	N
60	49	R110	EA21	7SJ612	SKRAT.OCHR.CAS		22	27	32	39		TR	O	Y	O	Y	1	N	N	R	N	Y	Alarm 1 (Hupenbefehl)	N	N
60	53	R110	EA21	7SJ612	NADPR.OCHR.CAS		22	27	32	39		TR	O	Y	O	Y	1	N	N	R	N	Y	Alarm 1 (Hupenbefehl)	N	N
60	75	R110	EA21	7SJ612	SKRAT.OCHR.POPUD	KON ZAC	22	27	32	39	78	SI	R/C	Y	R/C	Y	1	N	N	R/C	N	Y	Alarm 1 (Hupenbefehl)	N	N
60	76	R110	EA21	7SJ612	NADPR.OCHR.POPUD	KON ZAC	22	27	32	39	78	SI	R/C	Y	R/C	Y	1	N	N	R/C	N	Y	Alarm 1 (Hupenbefehl)	N	N
135	50	R110	EA21	7SJ612	NASTAVENIE LED ZOBR.	KON ZAC	22	27	32	39	75	SI	R/C	N				N	N	R/C	N	Y		N	N
135	81	R110	EA21	7SJ612	OCHRANA PRIPRAVENA	KON ZAC	22	27	32	39	75	SI	R/C	N				N	N	R/C	N	Y		N	N
135	130	R110	EA21	7SJ612	BUFER SIGN. PREPLNENY		22	27	32	39	0	TR	O	N				N	N	R	N	Y		N	N
135	231	R110	EA21	7SJ612	PORUCHA NAPAJ.OCHR.	KON ZAC	22	27	32	39	78	SI	R/C	Y	R/C	Y	1	N	N	R/C	N	Y	Alarm 1 (Hupenbefehl)	N	N
150	151	R110	EA21	7SJ612	SUM.POSOBENIE OCHR.		22	27	32	39		TR	O	Y	O	Y	1	N	N	R	N	Y	Alarm 1 (Hupenbefehl)	N	N
150	161	R110	EA21	7SJ612	SUM.GEN.VYP.IMPULZ		22	27	32	39		TR	O	Y	O	Y	1	N	N	R	N	Y	Alarm 1 (Hupenbefehl)	N	N
150	177	R110	EA21	7SJ612	VYPIN.PRUD. L1 I/In=		22	27	32	39	0	NV	O	Y	O	Y	1	N	N	R	N	Y	Alarm 1 (Hupenbefehl)	N	N
150	178	R110	EA21	7SJ612	VYPIN.PRUD. L2 I/In=		22	27	32	39	0	NV	O	Y	O	Y	1	N	N	R	N	Y	Alarm 1 (Hupenbefehl)	N	N
150	179	R110	EA21	7SJ612	VYPIN.PRUD. L3 I/In=		22	27	32	39	0	NV	O	Y	O	Y	1	N	N	R	N	Y	Alarm 1 (Hupenbefehl)	N	N
167	11	R110	EA21	7SJ612	O.PRETAZ. VYPNUTA	KON ZAC	22	27	32	39	75	SI	R/C	N				N	N	R/C	N	Y		N	N
167	12	R110	EA21	7SJ612	O.PRETAZ. BLOKOV.	KON ZAC	22	27	32	39	78	SI	R/C	N				N	N	R/C	N	Y		N	N
167	13	R110	EA21	7SJ612	O.PRETAZ. V CINNOSTI	KON ZAC	22	27	32	39	75	SI	R/C	N				N	N	R/C	N	Y		N	N

Documentation structur: Standard
Source file: KO050722.ODA

Date 22.07.2005
Drawn LANG
Appr.
Norm

VSZ KOSICE

SIEMENS AG
SAIOOLS

Substation control system 6MB
Numerical protection device:
Indications
Table

T = /BE 98
+

-S104

Page

Remarks | Date | Name | Orig./Repl. 1/Repl. by

Station:

Device EA21 7SJ612
Device type: 7SJ61
Function type: 7
Manufact.: SIEMENS

Packet number: 4
Version number: 0

Connection Device: EA21 EAG
Subrack: EA21 7SJ612
Module:
Comm. processor:
Channel connection
UART: 2
MUX:

Function type	Info number	Section	Bay	Logical device	Lower limit	Value text	Column section	Column bay	Column logical device	Column information	Column value text	Indication type	Entry in event list	Entry in alarm list	Acknowledge	Display in indication area	Indication class	Entry in SML	Display in diagram	Archive	Operational indications	Protection indications	Command derivation	Tel ctrl FP/SC	Command output
167	15	R110	EA21	7SJ612	O.PRETAZ. PRUD.VYSTR	KON ZAC	22	27	32	39	75	SI	R/C	N				N	N	R/C	N	Y		N	N
167	16	R110	EA21	7SJ612	O.PRETAZ. TEPEL.VYSTR	KON ZAC	22	27	32	39	75	SI	R/C	N				N	N	R/C	N	Y		N	N
167	21	R110	EA21	7SJ612	O.PRETAZ. VYP.POVEL		22	27	32	39		TR	O	N				N	N	R	N	Y		N	N

Proprietary data, company confidential. All rights reserved.
Confie a titre de secret d'entreprise. Tous droits réservés.
Comunicado como segredo empresarial. Reservados todos os direitos.
Confiado como secreto industrial. Nos reservamos todos los derechos.

The reproduction, transmission or use of this document or its is not permitted without express written authority.
Offenders will be liable for damages. All rights, including rights created by patent grant or registration of a utility model or design, are reserved.

Documentation structur: Standard
Source file: KO050722.ODA

Rev.	Remarks	Date	Name	Date	22.07.2005	VSZ KOSICE	SIEMENS AG SAOOLS	Substation control system 6MB
				Drawn	LANG			Numerical protection device:
				Appr.				Indications
				Norm		Orig./Repl. 1/Repl. by		Table

T = /BE 99
+
-S104
Page 99

Proprietary data, company confidential. All rights reserved
Confia a ltre da secret dentreprise. Tous droits rserva.
Comunicado como segredo empresarial. Reservados todos os direitos.
Confiado como secreto industrial. Nos reservamos todos los derechos.

The reproduction, transmission or use of this document or its
is not permitted without expres written authority.
Offenders will be liable for damages. All rights, including rights
created by patent grant or registration of a utility model or design, are reserved

Station:

Device EA23 7SD502
Device type: 7SD502/503
Function type: 7SD502/503
Manufact.: SIEMENS

Packet number: 3
Version number: 0

Connection Device: EA23 EAG
Subrack: EA23 7SD502
Module:
Comm. processor:
Channel connection
UART: 2
MUX:

Function type	Info number	Section	Bay	Logical device	Lower limit	Value text	Column section	Column bay	Column logical device	Column information	Column value text	Indication type	Entry in event list	Entry in alarm list	Acknowledge	Display in indication area	Indication class	Entry in SML	Display in diagram	Archive	Operational indications	Protection indications	Command derivation	Tel ctrl FP/SC	Command output
	19	R110	EA23	7SD502	NASTAVENIE LED ZOBR.		22	27	32	39	0	TR	O	N				N	N	R	N	Y		N	N
	22	R110	EA23	7SD502	PARAMETRIZACIA OCHRANY	KON ZAC	22	27	32	39	75	SI	R/C	N				N	N	R/C	N	Y		N	N
	23	R110	EA23	7SD502	PARAMETRIZ.AKT.SADA A	KON ZAC	22	27	32	39	75	SI	R/C	N				N	N	R/C	N	Y		N	N
	24	R110	EA23	7SD502	PARAMETRIZ.AKT.SADA B	KON ZAC	22	27	32	39	75	SI	R/C	N				N	N	R/C	N	Y		N	N
	25	R110	EA23	7SD502	PARAMETRIZ.AKT.SADA C	KON ZAC	22	27	32	39	75	SI	R/C	N				N	N	R/C	N	Y		N	N
	26	R110	EA23	7SD502	PARAMETRIZ.AKT.SADA D	KON ZAC	22	27	32	39	75	SI	R/C	N				N	N	R/C	N	Y		N	N
	27	R110	EA23	7SD502	POSOBENIE PLAST.OCHR	KON ZAC	22	27	32	39	75	SI	N	N				N	N	N				N	N
	68	R110	EA23	7SD502	DIF.O: VYP ST.IDIFF>		22	27	32	39		TR	O	Y	O	Y	1	N	N	R	N	Y	Alarm 1 (Hupenbefehl)	N	N
	84	R110	EA23	7SD502	DIF.O:GEN.POPUD	KON ZAC	22	27	32	39	78	SI	R/C	Y	R/C	Y	1	N	N	R/C	N	Y	Alarm 1 (Hupenbefehl)	N	N
51	111	R110	EA23	7SD502	VAZBA JE VYPNUTA	KON ZAC	22	27	32	39	75	SI	R/C	N				N	N	R/C	N	Y		N	N
51	113	R110	EA23	7SD502	VAZBA V CINNOSTI	KON ZAC	22	27	32	39	75	SI	R/C	N				N	N	R/C	N	Y		N	N
51	117	R110	EA23	7SD502	VAZBA VYP. IMPULZ	KON ZAC	22	27	32	39	78	SI	R/C	N				N	N	R/C	N	Y		N	N
62	6	R110	EA23	7SD502	REZ.BLOK.STUP.I>>	KON ZAC	22	27	32	39	75	SI	R/C	N				N	N	R/C	N	Y		N	N
62	7	R110	EA23	7SD502	REZ.BLOK.STUP.I>/Ip	KON ZAC	22	27	32	39	75	SI	R/C	N				N	N	R/C	N	Y		N	N
62	103	R110	EA23	7SD502	REZ. V. CINNOSTI	KON ZAC	22	27	32	39	75	SI	R/C	N				N	N	R/C	N	Y		N	N
62	111	R110	EA23	7SD502	REZ.GEN.POPUD		22	27	32	39		TR	O	Y	O	Y	1	N	N	R	N	Y	Alarm 1 (Hupenbefehl)	N	N
62	121	R110	EA23	7SD502	REZ.POPUD I>>		22	27	32	39		TR	O	Y	O	Y	1	N	N	R	N	Y	Alarm 1 (Hupenbefehl)	N	N
62	122	R110	EA23	7SD502	REZ.POPUD I>/Ip		22	27	32	39		TR	O	Y	O	Y	1	N	N	R	N	Y	Alarm 1 (Hupenbefehl)	N	N
62	141	R110	EA23	7SD502	REZ.SKRAT.CAS		22	27	32	39		TR	O	Y	O	Y	1	N	N	R	N	Y	Alarm 1 (Hupenbefehl)	N	N
62	142	R110	EA23	7SD502	REZ.NADPR.CAS		22	27	32	39		TR	O	Y	O	Y	1	N	N	R	N	Y	Alarm 1 (Hupenbefehl)	N	N
62	151	R110	EA23	7SD502	REZ.GEN.VYP.IMPULZ		22	27	32	39		TR	O	Y	O	Y	1	N	N	R	N	Y	Alarm 1 (Hupenbefehl)	N	N
92	17	R110	EA23	7SD502	DIF.O:V CINNOSTI	KON ZAC	22	27	32	39	75	SI	R/C	N				N	N	R/C	N	Y		N	N
93	11	R110	EA23	7SD502	DIAL.VYPINANIE VYPNUTE	KON ZAC	22	27	32	39	75	SI	R/C	N				N	N	R/C	N	Y		N	N
93	16	R110	EA23	7SD502	DIAL.VYP.IMP.VYSLANY	KON ZAC	22	27	32	39	75	SI	R/C	N				N	N	R/C	N	Y		N	N
93	41	R110	EA23	7SD502	VYP.PROTIST:VYPNUTE	KON ZAC	22	27	32	39	75	SI	R/C	N				N	N	R/C	N	Y		N	N
93	43	R110	EA23	7SD502	VYP.PROTIST.V.CINNOSTI	KON ZAC	22	27	32	39	75	SI	R/C	N				N	N	R/C	N	Y		N	N
93	46	R110	EA23	7SD502	VYP.PROTIS:POPUD	KON ZAC	22	27	32	39	78	SI	R/C	Y	R/C	Y	1	N	N	R/C	N	Y	Alarm 1 (Hupenbefehl)	N	N
93	47	R110	EA23	7SD502	VYP.PROTIS:VYP.IMP	KON ZAC	22	27	32	39	78	SI	R/C	Y	R/C	Y	1	N	N	R/C	N	Y	Alarm 1 (Hupenbefehl)	N	N
93	71	R110	EA23	7SD502	KONTR.PREN.CES.VYPNUTA	KON ZAC	22	27	32	39	75	SI	R/C	N				N	N	R/C	N	Y		N	N
93	76	R110	EA23	7SD502	POR.POM.PRENOS.CESTY	KON ZAC	22	27	32	39	75	SI	R/C	N				N	N	R/C	N	Y		N	N
135	81	R110	EA23	7SD502	OCHRANA PRIPRAVENA	KON ZAC	22	27	32	39	75	SI	R/C	N				N	N	R/C	N	Y		N	N
135	130	R110	EA23	7SD502	BUFER SIGN. PREPLNENY		22	27	32	39	0	TR	O	N				N	N	R	N	Y		N	N

Documentation structur: Standard
Source file: KO050722.ODA

Date	22.07.2005	VSZ KOSICE	SIEMENS AG ISATOOLS	Substation control system 6MB
Drawn	LANG			Numerical protection device:
Appr.				Indications
Remarks	Date	Name Norm	Orig./Repl. 1/Repl. by	Table

T = /BE 100
+
-S104
Page

Proprietary data, company confidential. All rights reserved.
Confiado a tire da secret de ntreprise. Tous droits r.serv.s.
Comunicado como segredo empresarial. Reservados todos os direitos.
Confiado como secreto industrial. Nos reservamos todos los derechos.

The reproduction, transmission or use of this document or its contents is not permitted without express written authority.
Offenders will be liable for damages. All rights, including rights created by patent grant or registration of a utility model or design, are reserved.

Station:
Device EA23 7SD502
Device type: 7SD502/503
Function type: 7SD502/503
Manufact.: SIEMENS

Packet number: 3
Version number: 0

Connection Device: EA23 EAG
Subrack: EA23 7SD502
Module:
Comm. processor:
Channel connection
UART: 2
MUX:

Function type	Info number	Section	Bay	Logical device	Lower limit	Value text	Column section	Column bay	Column logical device	Column information	Column value text	Indication type	Entry in event list	Entry in alarm list	Acknowledge	Display in indication area	Indication class	Entry in SML	Display in diagram	Archive	Operational indications	Protection indications	Command derivation	Tel ctrl FP/SC	Command output
135	131	R110	EA23	7SD502	STRATA SIGN. PRE LSA		22	27	32	39	0	TR	O	N				N	N	R	N	Y		N	N
135	166	R110	EA23	7SD502	PORUCHA V/V JEDN.C.1	KON ZAC	22	27	32	39	75	SI	R/C	N				N	N	R/C	N	Y		N	N
135	170	R110	EA23	7SD502	PORUCHA V/V JEDNOTKY	KON ZAC	22	27	32	39	75	SI	R/C	N				N	N	R/C	N	Y		N	N
135	231	R110	EA23	7SD502	PORUCHA NAPAJ.OCHR.	KON ZAC	22	27	32	39	78	SI	R/C	Y	R/C	Y	1	N	N	R/C	N	Y	Alarm 1 (Hupenbefehl)	N	N
150	152	R110	EA23	7SD502	SUM.ZRUS.POSOB.OCHR.		22	27	32	39	0	TR	O	Y	O	Y	1	N	N	R	N	Y	Alarm 1 (Hupenbefehl)	N	N
150	161	R110	EA23	7SD502	SUM.GEN.VYP.IMPULZ		22	27	32	39	0	TR	O	Y	O	Y	1	N	N	R	N	Y	Alarm 1 (Hupenbefehl)	N	N
167	13	R110	EA23	7SD502	O.PRETAZ:V CINNOSTI	KON ZAC	22	27	32	39	75	SI	R/C	N				N	N	R/C	N	Y		N	N
167	15	R110	EA23	7SD502	O.PRETAZ:PRUD.VYSTR	KON ZAC	22	27	32	39	75	SI	R/C	N				N	N	R/C	N	Y		N	N
167	16	R110	EA23	7SD502	O.PRETAZ:TEPEL.VYSTR.	KON ZAC	22	27	32	39	75	SI	R/C	N				N	N	R/C	N	Y		N	N
167	17	R110	EA23	7SD502	O.PRETAZ:POPUD	KON ZAC	22	27	32	39	75	SI	R/C	N				N	N	R/C	N	Y		N	N
167	21	R110	EA23	7SD502	O.PRETAZ:VYP.POVEL		22	27	32	39		TR	O	Y	O	Y	1	N	N	R	N	Y	Alarm 1 (Hupenbefehl)	N	N

Documentation structur: Standard
Source file: KO050722.ODA

Rev.	Remarks	Date	Name	Norm	Date 22.07.2005	Drawn LANG	Appr.	Orig./Repl. 1/Repl. by

VSZ KOSICE

SIEMENS AG
ISATOOLS

Substation control system 6MB
Numerical protection device:
Indications
Table

T = /BE 101
+
-S104
Page 101

Station:
Device EA23 7SJ512
Device type: 7SJ512
Function type: 7SJ512
Manufact.: SIEMENS

Packet number: 3
Version number: 0

Connection Device: EA23 EAG
Subrack: EA23 7SJ512
Module:
Comm. processor:
Channel connection
UART: 2
MUX:

Function type	Info number	Section	Bay	Logical device	Lower limit	Value text	Column section	Column bay	Column logical device	Column information	Column value text	Indication type	Entry in event list	Entry in alarm list	Acknowledge	Display in indication area	Indication class	Entry in SML	Display in diagram	Archive	Operational indications	Protection indications	Command derivation	Tel ctrl FP/SC	Command output
	19	R110	EA23	7SJ512	NASTAVENIE LED ZOBR.		22	27	32	39	0	TR	O	N				N	N	R	N	Y		N	N
	22	R110	EA23	7SJ512	PARAMETRIZACIA OCHRANY	KON ZAC	22	27	32	39	75	SI	R/C	N				N	N	R/C	N	Y		N	N
	27	R110	EA23	7SJ512	ANWENDERDEF. MELDUNG 1	KON ZAC	22	27	32	39	75	SI	N	N				N	N	N				N	N
	28	R110	EA23	7SJ512	ANWENDERDEF. MELDUNG 2	KON ZAC	22	27	32	39	75	SI	N	N				N	N	N				N	N
	29	R110	EA23	7SJ512	ANWENDERDEF. MELDUNG 3	KON ZAC	22	27	32	39	75	SI	N	N				N	N	N				N	N
	30	R110	EA23	7SJ512	ANWENDERDEF. MELDUNG 4	KON ZAC	22	27	32	39	75	SI	N	N				N	N	N				N	N
	32	R110	EA23	7SJ512	PORUCHA MER. PRUDU	KON ZAC	22	27	32	39	75	SI	R/C	N				N	N	R/C	N	Y		N	N
	33	R110	EA23	7SJ512	PORUCHA MER.NAPATIA	KON ZAC	22	27	32	39	75	SI	R/C	N				N	N	R/C	N	Y		N	N
	36	R110	EA23	7SJ512	KONTROLA VYST.JEDN.	KON ZAC	22	27	32	39	75	SI	R/C	N				N	N	R/C	N	Y		N	N
	48	R110	EA23	7SJ512	ZEMNE SPOJENIE V L1	KON ZAC	22	27	32	39	75	SI	N	N				N	N	N				N	N
	49	R110	EA23	7SJ512	ZEMNE SPOJENIE V L2	KON ZAC	22	27	32	39	75	SI	N	N				N	N	N				N	N
	50	R110	EA23	7SJ512	ZEMNE SPOJENIE V L3	KON ZAC	22	27	32	39	75	SI	N	N				N	N	N				N	N
	68	R110	EA23	7SJ512	NADPR.O.GEN.VYP.IMP		22	27	32	39		TR	O	Y	O	Y	1	N	N	R	N	Y	Alarm 1 (Hupenbefehl)	N	N
	74	R110	EA23	7SJ512	SUM.VYP.IMP.VPRED		22	27	32	39		TR	O	Y	O	Y	1	N	N	R	N	Y	Alarm 1 (Hupenbefehl)	N	N
	75	R110	EA23	7SJ512	SUM.VYP.IMP.VZAD		22	27	32	39		TR	O	Y	O	Y	1	N	N	R	N	Y	Alarm 1 (Hupenbefehl)	N	N
	84	R110	EA23	7SJ512	NADPR.OCHR.GEN.POPUD	KON ZAC	22	27	32	39	78	SI	R/C	Y	R/C	Y	1	N	N	R/C	N	Y	Alarm 1 (Hupenbefehl)	N	N
	90	R110	EA23	7SJ512	NADPR.OCHR.VYP.IMP2		22	27	32	39		TR	O	N				N	N	N				N	N
	91	R110	EA23	7SJ512	SKRAT.OCHR.VYP.IMP.		22	27	32	39		TR	O	Y	O	Y	1	N	N	R	N	Y	Alarm 1 (Hupenbefehl)	N	N
60	46	R110	EA23	7SJ512	SKRAT.OCHR.POPUD L1	KON ZAC	22	27	32	39	78	SI	R/C	Y	R/C	Y	1	N	N	R/C	N	Y	Alarm 1 (Hupenbefehl)	N	N
60	47	R110	EA23	7SJ512	SKRAT.OCHR.POPUD L2	KON ZAC	22	27	32	39	78	SI	R/C	Y	R/C	Y	1	N	N	R/C	N	Y	Alarm 1 (Hupenbefehl)	N	N
60	48	R110	EA23	7SJ512	SKRAT.OCHR.POPUD L3	KON ZAC	22	27	32	39	78	SI	R/C	Y	R/C	Y	1	N	N	R/C	N	Y	Alarm 1 (Hupenbefehl)	N	N
60	49	R110	EA23	7SJ512	SKRAT.OCHR.CAS		22	27	32	39		TR	O	Y	O	Y	1	N	N	R	N	Y	Alarm 1 (Hupenbefehl)	N	N
60	50	R110	EA23	7SJ512	NADPR.OCHR.POPUD L1	KON ZAC	22	27	32	39	78	SI	R/C	Y	R/C	Y	1	N	N	R/C	N	Y	Alarm 1 (Hupenbefehl)	N	N
60	51	R110	EA23	7SJ512	NADPR.OCHR.POPUD L2	KON ZAC	22	27	32	39	78	SI	R/C	Y	R/C	Y	1	N	N	R/C	N	Y	Alarm 1 (Hupenbefehl)	N	N
60	52	R110	EA23	7SJ512	NADPR.OCHR.POPUD L3	KON ZAC	22	27	32	39	78	SI	R/C	Y	R/C	Y	1	N	N	N			Alarm 1 (Hupenbefehl)	N	N
60	53	R110	EA23	7SJ512	NADPR.OCHR.CAS		22	27	32	39		TR	O	Y	O	Y	1	N	N	R	N	Y	Alarm 1 (Hupenbefehl)	N	N
63	21	R110	EA23	7SJ512	NADPR.SMER.POPUD L1	KON ZAC	22	27	32	39	78	SI	R/C	Y	R/C	Y	1	N	N	R/C	N	Y	Alarm 1 (Hupenbefehl)	N	N
63	22	R110	EA23	7SJ512	NADPR.SMER.POPUD L2	KON ZAC	22	27	32	39	78	SI	R/C	Y	R/C	Y	1	N	N	R/C	N	Y	Alarm 1 (Hupenbefehl)	N	N
63	23	R110	EA23	7SJ512	NADPR.SMER.POPUD L3	KON ZAC	22	27	32	39	78	SI	R/C	Y	R/C	Y	1	N	N	R/C	N	Y	Alarm 1 (Hupenbefehl)	N	N
63	24	R110	EA23	7SJ512	NADPR.SMER.OCHR.CAS		22	27	32	39		TR	O	Y	O	Y	1	N	N	R	N	Y	Alarm 1 (Hupenbefehl)	N	N
135	81	R110	EA23	7SJ512	OCHRANA PRIPRAVENA	KON ZAC	22	27	32	39	75	SI	R/C	N				N	N	R/C	N	Y		N	N
135	130	R110	EA23	7SJ512	BUFER SIGN. PREPLNENY		22	27	32	39	0	TR	O	N				N	N	R	N	Y		N	N

Proprietary data, company confidential. All rights reserved
Confia a ltrie de secret d'entreprise. Tous droits r.serv/s.
Comunicado como segredo empresarial. Reservados todos os direitos.
Comunicado como secreto industrial. Nos reservamos todos los derechos.
The reproduction, transmission or use of this document or its contents is not permitted without express written authority. Offenders will be liable for damages. All rights, including rights created by patent grant or registration of a utility model or design, are reserved

Documentation structure: Standard
Source file: KO050722.ODA

Date	22.07.2005	VSZ KOSICE	SIEMENS AG ISATOOLS	Substation control system 6MB Numerical protection device: Indications Table	T = /BE 102
Drawn	LANG				+
Appr.					-S104 Page 102
Remarks	Date	Name Norm	Orig./Repl. 1/Repl. by		

Proprietary data, company confidential. All rights reserved.
Confia a ttre da secrd dentreprise. Tous droits r.serv.s.
Comunicado como segredo empresarial. Reservados todos os direitos.
Contado como secreto industrial. Nos reservamos todos los derechos.
The reproduction, transmission or use of this document or its contents is not permitted without expres written authority.
Offenders will be liable for damages. All rights, including rights created by patent grant or registration of a utility model or design, are reserved.

Station:
Device EA23 7SJ512
Device type: 7SJ512
Function type: 7SJ512
Manufact.: SIEMENS

Packet number: 3
Version number: 0

Connection Device: EA23 EAG
Subrack: EA23 7SJ512
Module:
Comm. processor:
Channel connection
UART: 2
MUX:

Function type	Info number	Section	Bay	Logical device	Lower limit	Value text	Column section	Column bay	Column logical device	Column information	Column value text	Indication type	Entry in event list	Entry in alarm list	Acknowledge	Display in indication area	Indication class	Entry in SML	Display in diagram	Archive	Operational indications	Protection indications	Command derivation	Tel ctrl FP/SC	Command output
135	131	R110	EA23	7SJ512	STRATA SIGN. PRE LSA		22	27	32	39	0	TR	O	N				N	N	R	N	Y		N	N
135	170	R110	EA23	7SJ512	PORUCHA V/V JEDNOTKY	KON ZAC	22	27	32	39	75	SI	R/C	N				N	N	R/C	N	Y		N	N
135	231	R110	EA23	7SJ512	PORUCHA NAPAJ.OCHR.	KON ZAC	22	27	32	39	78	SI	R/C	Y	R/C	Y	1	N	N	R/C	N	Y	Alarm 1 (Hupenbefehl)	N	N
150	151	R110	EA23	7SJ512	SUM.POSOBENIE OCHR.		22	27	32	39	0	TR	O	Y	O	Y	1	N	N	R	N	Y	Alarm 1 (Hupenbefehl)	N	N
150	152	R110	EA23	7SJ512	SUM.ZRUS.POSOB.OCHR.		22	27	32	39	0	TR	O	Y	O	Y	1	N	N	R	N	Y	Alarm 1 (Hupenbefehl)	N	N
150	161	R110	EA23	7SJ512	SUM.GEN.VYP.IMPULZ		22	27	32	39	0	TR	O	Y	O	Y	1	N	N	R	N	Y	Alarm 1 (Hupenbefehl)	N	N
150	171	R110	EA23	7SJ512	VYPIN.PRUD. L1 I/In=		22	27	32	39	0	NV	O	Y	O	Y	1	N	N	R	N	Y	Alarm 1 (Hupenbefehl)	N	N
150	172	R110	EA23	7SJ512	VYPIN.PRUD. L2 I/In=		22	27	32	39	0	NV	O	Y	O	Y	1	N	N	R	N	Y	Alarm 1 (Hupenbefehl)	N	N
150	173	R110	EA23	7SJ512	VYPIN.PRUD. L3 I/In=		22	27	32	39	0	NV	O	Y	O	Y	1	N	N	R	N	Y	Alarm 1 (Hupenbefehl)	N	N
167	11	R110	EA23	7SJ512	O.PRETAZ. VYPNUTA	KON ZAC	22	27	32	39	75	SI	R/C	N				N	N	R/C	N	Y		N	N
167	12	R110	EA23	7SJ512	O.PRETAZ. BLOKOV.	KON ZAC	22	27	32	39	75	SI	R/C	N				N	N	R/C	N	Y		N	N
167	13	R110	EA23	7SJ512	O.PRETAZ. V CINNOSTI	KON ZAC	22	27	32	39	75	SI	R/C	N				N	N	R/C	N	Y		N	N
167	15	R110	EA23	7SJ512	O.PRETAZ. PRUD.VYSTR	KON ZAC	22	27	32	39	75	SI	R/C	N				N	N	R/C	N	Y		N	N
167	16	R110	EA23	7SJ512	O.PRETAZ. TEPEL.VYSTR	KON ZAC	22	27	32	39	75	SI	R/C	N				N	N	R/C	N	Y		N	N
167	21	R110	EA23	7SJ512	O.PRETAZ. VYP.POVEL		22	27	32	39		TR	O	N				N	N	R	N	Y		N	N

Documentation structur: Standard
Source file: KO050722.ODA

Rev.	Remarks	Date	Name	Norm	Date 22.07.2005	Drawn LANG	Appr.	Orig./Repl. 1/Repl. by

VSZ KOSICE

SIEMENS AG
ISATOOLS

Substation control system 6MB
Numerical protection device:
Indications
Table

T = /BE 103
+
-S104

Proprietary data, company confidential. All rights reserved
Confia a tire da secret d'entreprise. Tous droits r sers v.
Comunicado como segredo empresarial. Reservados todos os direitos.
Confiado como secreto industrial. Nos reservamos todos los derechos.

The reproduction, transmission or use of this document or its
is not permitted without express written authority.
Offenders will be liable for damages. All rights, including rights
created by patent grant or registration of a utility model or design, are reserved.

Station:
Device K01 7SJ512
Device type: 7SJ512
Function type: 7SJ512
Manufact.: SIEMENS

Packet number: 3
Version number: 0

Connection Device: K01 EAG
Subrack: K01 7SJ512
Module:
Comm. processor:
Channel connection
UART: 2
MUX:

Function type	Info number	Section	Bay	Logical device	Lower limit	Value text	Column section	Column bay	Column logical device	Column information	Column value text	Indication type	Entry in event list	Entry in alarm list	Acknowledge	Display in indication area	Indication class	Entry in SML	Display in diagram	Archive	Operational indications	Protection indications	Command derivation	Tel ctrl FP/SC	Command output
	19	T201	TERC	7SJ512	NASTAVENIE LED ZOBR.		22	27	32	39	0	TR	O	N				N	N	R	N	Y		N	N
	22	T201	TERC	7SJ512	PARAMETRIZACIA OCHRANY	KON ZAC	22	27	32	39	75	SI	R/C	N				N	N	R/C	N	Y		N	N
	27	T201	TERC	7SJ512	ANWENDERDEF. MELDUNG 1	KON ZAC	22	27	32	39	75	SI	N	N				N	N	N				N	N
	28	T201	TERC	7SJ512	ANWENDERDEF. MELDUNG 2	KON ZAC	22	27	32	39	75	SI	N	N				N	N	N				N	N
	29	T201	TERC	7SJ512	ANWENDERDEF. MELDUNG 3	KON ZAC	22	27	32	39	75	SI	N	N				N	N	N				N	N
	30	T201	TERC	7SJ512	ANWENDERDEF. MELDUNG 4	KON ZAC	22	27	32	39	75	SI	N	N				N	N	N				N	N
	32	T201	TERC	7SJ512	PORUCHA MER. PRUDU	KON ZAC	22	27	32	39	75	SI	R/C	N				N	N	R/C	N	Y		N	N
	33	T201	TERC	7SJ512	PORUCHA MER.NAPATIA	KON ZAC	22	27	32	39	75	SI	R/C	N				N	N	R/C	N	Y		N	N
	36	T201	TERC	7SJ512	KONTROLA VYST.JEDN.	KON ZAC	22	27	32	39	75	SI	R/C	N				N	N	R/C	N	Y		N	N
	48	T201	TERC	7SJ512	ZEMNE SPOJENIE V L1	KON ZAC	22	27	32	39	75	SI	R/C	Y	R/C	Y	1	N	N	R/C	N	Y	Alarm 1 (Hupenbefehl)	N	N
	49	T201	TERC	7SJ512	ZEMNE SPOJENIE V L2	KON ZAC	22	27	32	39	75	SI	R/C	Y	R/C	Y	1	N	N	R/C	N	Y	Alarm 1 (Hupenbefehl)	N	N
	50	T201	TERC	7SJ512	ZEMNE SPOJENIE V L3	KON ZAC	22	27	32	39	75	SI	R/C	Y	R/C	Y	1	N	N	R/C	N	Y	Alarm 1 (Hupenbefehl)	N	N
	68	T201	TERC	7SJ512	NADPR.O.GEN.VYP.IMP		22	27	32	39		TR	O	Y	O	Y	1	N	N	R	N	Y	Alarm 1 (Hupenbefehl)	N	N
	74	T201	TERC	7SJ512	SUM.VYP.IMP.VPRED		22	27	32	39		TR	O	Y	O	Y	1	N	N	R	N	Y	Alarm 1 (Hupenbefehl)	N	N
	75	T201	TERC	7SJ512	SUM.VYP.IMP.VZAD		22	27	32	39		TR	O	Y	O	Y	1	N	N	R	N	Y	Alarm 1 (Hupenbefehl)	N	N
	84	T201	TERC	7SJ512	NADPR.OCHR.GEN.POPUD	KON ZAC	22	27	32	39	78	SI	R/C	Y	R/C	Y	1	N	N	R/C	N	Y	Alarm 1 (Hupenbefehl)	N	N
	90	T201	TERC	7SJ512	NADPR.OCHR.VYP.IMP2		22	27	32	39		TR	O	N				N	N	N				N	N
	91	T201	TERC	7SJ512	SKRAT.OCHR.VYP.IMP.		22	27	32	39		TR	O	Y	O	Y	1	N	N	R	N	Y	Alarm 1 (Hupenbefehl)	N	N
60	46	T201	TERC	7SJ512	SKRAT.OCHR.POPUD L1	KON ZAC	22	27	32	39	78	SI	R/C	Y	R/C	Y	1	N	N	R/C	N	Y	Alarm 1 (Hupenbefehl)	N	N
60	47	T201	TERC	7SJ512	SKRAT.OCHR.POPUD L2	KON ZAC	22	27	32	39	78	SI	R/C	Y	R/C	Y	1	N	N	R/C	N	Y	Alarm 1 (Hupenbefehl)	N	N
60	48	T201	TERC	7SJ512	SKRAT.OCHR.POPUD L3	KON ZAC	22	27	32	39	78	SI	R/C	Y	R/C	Y	1	N	N	R/C	N	Y	Alarm 1 (Hupenbefehl)	N	N
60	49	T201	TERC	7SJ512	SKRAT.OCHR.CAS		22	27	32	39		TR	O	Y	O	Y	1	N	N	R	N	Y	Alarm 1 (Hupenbefehl)	N	N
60	50	T201	TERC	7SJ512	NADPR.OCHR.POPUD L1	KON ZAC	22	27	32	39	78	SI	R/C	Y	R/C	Y	1	N	N	R/C	N	Y	Alarm 1 (Hupenbefehl)	N	N
60	51	T201	TERC	7SJ512	NADPR.OCHR.POPUD L2	KON ZAC	22	27	32	39	78	SI	R/C	Y	R/C	Y	1	N	N	R/C	N	Y	Alarm 1 (Hupenbefehl)	N	N
60	52	T201	TERC	7SJ512	NADPR.OCHR.POPUD L3	KON ZAC	22	27	32	39	78	SI	R/C	Y	R/C	Y	1	N	N	N			Alarm 1 (Hupenbefehl)	N	N
60	53	T201	TERC	7SJ512	NADPR.OCHR.CAS		22	27	32	39		TR	O	Y	O	Y	1	N	N	R	N	Y	Alarm 1 (Hupenbefehl)	N	N
63	21	T201	TERC	7SJ512	NADPR.SMER.POPUD L1	KON ZAC	22	27	32	39	78	SI	R/C	Y	R/C	Y	1	N	N	R/C	N	Y	Alarm 1 (Hupenbefehl)	N	N
63	22	T201	TERC	7SJ512	NADPR.SMER.POPUD L2	KON ZAC	22	27	32	39	78	SI	R/C	Y	R/C	Y	1	N	N	R/C	N	Y	Alarm 1 (Hupenbefehl)	N	N
63	23	T201	TERC	7SJ512	NADPR.SMER.POPUD L3	KON ZAC	22	27	32	39	78	SI	R/C	Y	R/C	Y	1	N	N	R/C	N	Y	Alarm 1 (Hupenbefehl)	N	N
63	24	T201	TERC	7SJ512	NADPR.SMER.OCHR.CAS		22	27	32	39		TR	O	Y	O	Y	1	N	N	R	N	Y	Alarm 1 (Hupenbefehl)	N	N
135	81	T201	TERC	7SJ512	OCHRANA PRIPRAVENA	KON ZAC	22	27	32	39	75	SI	R/C	N				N	N	R/C	N	Y		N	N
135	130	T201	TERC	7SJ512	BUFER SIGN. PREPLNENY		22	27	32	39	0	TR	O	N				N	N	R	N	Y		N	N

Documentation structur: Standard
Source file: K0050722.ODA

Date 22.07.2005
Drawn LANG
Appr.
Norm

VSZ
KOSICE

SIEMENS AG
ISATOOLS

Substation control system 6MB
Numerical protection device:
Indications
Table

T = /BE 104
+
-S104
Page 104

Remarks | Date | Name | Orig./Repl. 1/Repl. by

Proprietary data, company confidential. All rights reserved.
Confia a titre de secret d'entreprise. Tous droits reservés.
Comunicado como segredo empresarial. Reservados todos os direitos.
Confiado como secreto industrial. Nos reservamos todos los derechos.

The reproduction, transmission or use of this document or its is not permitted without expres written authority.
Offenders will be liable for damages. All rights, including rights created by patent grant or registration of a utility model or design, are reserved.

Station:
Device K01 7SJ512
Device type: 7SJ512
Function type: 7SJ512
Manufact.: SIEMENS

Packet number: 3
Version number: 0

Connection Device: K01 EAG
Subrack: K01 7SJ512
Module:
Comm. processor:
Channel connection
UART: 2
MUX:

Function type	Info number	Section	Bay	Logical device	Lower limit	Value text	Column section	Column bay	Column logical device	Column information	Column value text	Indication type	Entry in event list	Entry in alarm list	Acknowledge	Display in indication area	Indication class	Entry in SML	Display in diagram	Archive	Operational indications	Protection indications	Command derivation	Tel ctrl FP/SC	Command output
135	131	T201	TERC	7SJ512	STRATA SIGN. PRE LSA		22	27	32	39	0	TR	O	N				N	N	R	N	Y		N	N
135	170	T201	TERC	7SJ512	PORUCHA V/V JEDNOTKY	KON ZAC	22	27	32	39	75	SI	R/C	N				N	N	R/C	N	Y		N	N
135	231	T201	TERC	7SJ512	PORUCHA NAPAJ.OCHR.	KON ZAC	22	27	32	39	78	SI	R/C	Y	R/C	Y	1	N	N	R/C	N	Y	Alarm 1 (Hupenbefehl)	N	N
150	151	T201	TERC	7SJ512	SUM.POSOBENIE OCHR.		22	27	32	39	0	TR	O	Y	O	Y	1	N	N	R	N	Y	Alarm 1 (Hupenbefehl)	N	N
150	152	T201	TERC	7SJ512	SUM.ZRUS.POSOB.OCHR.		22	27	32	39	0	TR	O	Y	O	Y	1	N	N	R	N	Y	Alarm 1 (Hupenbefehl)	N	N
150	161	T201	TERC	7SJ512	SUM.GEN.VYP.IMPULZ		22	27	32	39	0	TR	O	Y	O	Y	1	N	N	R	N	Y	Alarm 1 (Hupenbefehl)	N	N
150	171	T201	TERC	7SJ512	VYPIN.PRUD. L1 I/In=		22	27	32	39	0	NV	O	Y	O	Y	1	N	N	R	N	Y	Alarm 1 (Hupenbefehl)	N	N
150	172	T201	TERC	7SJ512	VYPIN.PRUD. L2 I/In=		22	27	32	39	0	NV	O	Y	O	Y	1	N	N	R	N	Y	Alarm 1 (Hupenbefehl)	N	N
150	173	T201	TERC	7SJ512	VYPIN.PRUD. L3 I/In=		22	27	32	39	0	NV	O	Y	O	Y	1	N	N	R	N	Y	Alarm 1 (Hupenbefehl)	N	N
167	11	T201	TERC	7SJ512	O.PRETAZ. VYPNUTA	KON ZAC	22	27	32	39	75	SI	R/C	N				N	N	R/C	N	Y		N	N
167	12	T201	TERC	7SJ512	O.PRETAZ. BLOKOV.	KON ZAC	22	27	32	39	75	SI	R/C	N				N	N	R/C	N	Y		N	N
167	13	T201	TERC	7SJ512	O.PRETAZ. V CINNOSTI	KON ZAC	22	27	32	39	75	SI	R/C	N				N	N	R/C	N	Y		N	N
167	15	T201	TERC	7SJ512	O.PRETAZ. PRUD.VYSTR	KON ZAC	22	27	32	39	75	SI	R/C	N				N	N	R/C	N	Y		N	N
167	16	T201	TERC	7SJ512	O.PRETAZ. TEPEL.VYSTR	KON ZAC	22	27	32	39	75	SI	R/C	N				N	N	R/C	N	Y		N	N
167	21	T201	TERC	7SJ512	O.PRETAZ. VYP.POVEL		22	27	32	39		TR	O	N				N	N	R	N	Y		N	N

Documentation structur: Standard
Source file: KO050722.ODA

Rev.	Remarks	Date	Name	Norm	Date 22.07.2005	Drawn LANG	Appr.	Orig./Repl. 1/Repl. by

VSZ KOSICE

SIEMENS AG
ISAOOLS

Substation control system 6MB
Numerical protection device:
Indications
Table

T = /BE 105
+
-S104
Page 105

Proprietary data, company confidential. All rights reserved
Confia a tire da secrecy de empresa. Todos os direitos
Comunicado como segredo empresarial. Reservados todos os direitos
Confiado como secreto industrial. Nos reservamos todos los derechos
The reproduction, transmission or use of this document or its
is not permitted without expres written authority.
Offenders will be liable for damages. All rights, including rights
created by patent grant or registration of a utility model or design, are reserved

Station:
Device K02 7SJ512
Device type: 7SJ512
Function type: 7SJ512
Manufact.: SIEMENS

Packet number: 3
Version number: 0

Connection Device: K02 EAG
Subrack: K02 7SJ512
Module:
Comm. processor:
Channel connection
UART: 2
MUX:

Function type	Info number	Section	Bay	Logical device	Lower limit	Value text	Column section	Column bay	Column logical device	Column information	Column value text	Indication type	Entry in event list	Entry in alarm list	Acknowledge	Display in indication area	Indication class	Entry in SML	Display in diagram	Archive	Operational indications	Protection indications	Command derivation	Tel ctrl FP/SC	Command output
	19	T202	TERC	7SJ512	NASTAVENIE LED ZOBR.		22	27	32	39	0	TR	O	N				N	N	R	N	Y		N	N
	22	T202	TERC	7SJ512	PARAMETRIZACIA OCHRANY	KON ZAC	22	27	32	39	75	SI	R/C	N				N	N	R/C	N	Y		N	N
	27	T202	TERC	7SJ512	ANWENDERDEF. MELDUNG 1	KON ZAC	22	27	32	39	75	SI	N	N				N	N	N				N	N
	28	T202	TERC	7SJ512	ANWENDERDEF. MELDUNG 2	KON ZAC	22	27	32	39	75	SI	N	N				N	N	N				N	N
	29	T202	TERC	7SJ512	ANWENDERDEF. MELDUNG 3	KON ZAC	22	27	32	39	75	SI	N	N				N	N	N				N	N
	30	T202	TERC	7SJ512	ANWENDERDEF. MELDUNG 4	KON ZAC	22	27	32	39	75	SI	N	N				N	N	N				N	N
	32	T202	TERC	7SJ512	PORUCHA MER. PRUDU	KON ZAC	22	27	32	39	75	SI	R/C	N				N	N	R/C	N	Y		N	N
	33	T202	TERC	7SJ512	PORUCHA MER.NAPATIA	KON ZAC	22	27	32	39	75	SI	R/C	N				N	N	R/C	N	Y		N	N
	36	T202	TERC	7SJ512	KONTROLA VYST.JEDN.	KON ZAC	22	27	32	39	75	SI	R/C	N				N	N	R/C	N	Y		N	N
	48	T202	TERC	7SJ512	ZEMNE SPOJENIE V L1	KON ZAC	22	27	32	39	75	SI	R/C	Y	R/C	Y	1	N	N	R/C	N	Y	Alarm 1 (Hupenbefehl)	N	N
	49	T202	TERC	7SJ512	ZEMNE SPOJENIE V L2	KON ZAC	22	27	32	39	75	SI	R/C	Y	R/C	Y	1	N	N	R/C	N	Y	Alarm 1 (Hupenbefehl)	N	N
	50	T202	TERC	7SJ512	ZEMNE SPOJENIE V L3	KON ZAC	22	27	32	39	75	SI	R/C	Y	R/C	Y	1	N	N	R/C	N	Y	Alarm 1 (Hupenbefehl)	N	N
	68	T202	TERC	7SJ512	NADPR.O.GEN.VYP.IMP		22	27	32	39		TR	O	Y	O	Y	1	N	N	R	N	Y	Alarm 1 (Hupenbefehl)	N	N
	74	T202	TERC	7SJ512	SUM.VYP.IMP.VPRED		22	27	32	39		TR	O	Y	O	Y	1	N	N	R	N	Y	Alarm 1 (Hupenbefehl)	N	N
	75	T202	TERC	7SJ512	SUM.VYP.IMP.VZAD		22	27	32	39		TR	O	Y	O	Y	1	N	N	R	N	Y	Alarm 1 (Hupenbefehl)	N	N
	84	T202	TERC	7SJ512	NADPR.OCHR.GEN.POPUD	KON ZAC	22	27	32	39	78	SI	R/C	Y	R/C	Y	1	N	N	R/C	N	Y	Alarm 1 (Hupenbefehl)	N	N
	90	T202	TERC	7SJ512	NADPR.OCHR.VYP.IMP2		22	27	32	39		TR	O	N				N	N	N				N	N
	91	T202	TERC	7SJ512	SKRAT.OCHR.VYP.IMP.		22	27	32	39		TR	O	Y	O	Y	1	N	N	R	N	Y	Alarm 1 (Hupenbefehl)	N	N
60	46	T202	TERC	7SJ512	SKRAT.OCHR.POPUD L1	KON ZAC	22	27	32	39	78	SI	R/C	Y	R/C	Y	1	N	N	R/C	N	Y	Alarm 1 (Hupenbefehl)	N	N
60	47	T202	TERC	7SJ512	SKRAT.OCHR.POPUD L2	KON ZAC	22	27	32	39	78	SI	R/C	Y	R/C	Y	1	N	N	R/C	N	Y	Alarm 1 (Hupenbefehl)	N	N
60	48	T202	TERC	7SJ512	SKRAT.OCHR.POPUD L3	KON ZAC	22	27	32	39	78	SI	R/C	Y	R/C	Y	1	N	N	R/C	N	Y	Alarm 1 (Hupenbefehl)	N	N
60	49	T202	TERC	7SJ512	SKRAT.OCHR.CAS		22	27	32	39		TR	O	Y	O	Y	1	N	N	R	N	Y	Alarm 1 (Hupenbefehl)	N	N
60	50	T202	TERC	7SJ512	NADPR.OCHR.POPUD L1	KON ZAC	22	27	32	39	78	SI	R/C	Y	R/C	Y	1	N	N	R/C	N	Y	Alarm 1 (Hupenbefehl)	N	N
60	51	T202	TERC	7SJ512	NADPR.OCHR.POPUD L2	KON ZAC	22	27	32	39	78	SI	R/C	Y	R/C	Y	1	N	N	R/C	N	Y	Alarm 1 (Hupenbefehl)	N	N
60	52	T202	TERC	7SJ512	NADPR.OCHR.POPUD L3	KON ZAC	22	27	32	39	78	SI	R/C	Y	R/C	Y	1	N	N	N			Alarm 1 (Hupenbefehl)	N	N
60	53	T202	TERC	7SJ512	NADPR.OCHR.CAS		22	27	32	39		TR	O	Y	O	Y	1	N	N	R	N	Y	Alarm 1 (Hupenbefehl)	N	N
63	21	T202	TERC	7SJ512	NADPR.SMER.POPUD L1	KON ZAC	22	27	32	39	78	SI	R/C	Y	R/C	Y	1	N	N	R/C	N	Y	Alarm 1 (Hupenbefehl)	N	N
63	22	T202	TERC	7SJ512	NADPR.SMER.POPUD L2	KON ZAC	22	27	32	39	78	SI	R/C	Y	R/C	Y	1	N	N	R/C	N	Y	Alarm 1 (Hupenbefehl)	N	N
63	23	T202	TERC	7SJ512	NADPR.SMER.POPUD L3	KON ZAC	22	27	32	39	78	SI	R/C	Y	R/C	Y	1	N	N	R/C	N	Y	Alarm 1 (Hupenbefehl)	N	N
63	24	T202	TERC	7SJ512	NADPR.SMER.OCHR.CAS		22	27	32	39		TR	O	Y	O	Y	1	N	N	R	N	Y	Alarm 1 (Hupenbefehl)	N	N
135	81	T202	TERC	7SJ512	OCHRANA PRIPRAVENA	KON ZAC	22	27	32	39	75	SI	R/C	N				N	N	R/C	N	Y		N	N
135	130	T202	TERC	7SJ512	BUFER SIGN. PREPLNENY		22	27	32	39	0	TR	O	N				N	N	R	N	Y		N	N

Documentation structur: Standard
Source file: K0050722.ODA

Date	22.07.2005	VSZ KOSICE	SIEMENS AG ISATOOLS
Drawn	LANG		
Appr.			
Remarks	Date	Name Norm	Orig./Repl. 1/Repl. by

Substation control system 6MB
Numerical protection device:
Indications
Table

T = /BE 106
+
-S104
Page

Station:
Device K02 7SJ512
Device type: 7SJ512
Function type: 7SJ512
Manufact.: SIEMENS

Packet number: 3
Version number: 0

Connection Device: K02 EAG
Subrack: K02 7SJ512
Module:
Comm. processor:
Channel connection
UART: 2
MUX:

Function type	Info number	Section	Bay	Logical device	Lower limit	Value text	Column section	Column bay	Column logical device	Column information	Column value text	Indication type	Entry in event list	Entry in alarm list	Acknowledge	Display in indication area	Indication class	Entry in SML	Display in diagram	Archive	Operational indications	Protection indications	Command derivation	Tel ctrl FP/SC	Command output
135	131	T202	TERC	7SJ512	STRATA SIGN. PRE LSA		22	27	32	39	0	TR	O	N				N	N	R	N	Y		N	N
135	170	T202	TERC	7SJ512	PORUCHA V/V JEDNOTKY	KON ZAC	22	27	32	39	75	SI	R/C	N				N	N	R/C	N	Y		N	N
135	231	T202	TERC	7SJ512	PORUCHA NAPAJ.OCHR.	KON ZAC	22	27	32	39	78	SI	R/C	Y	R/C	Y	1	N	N	R/C	N	Y	Alarm 1 (Hupenbefehl)	N	N
150	151	T202	TERC	7SJ512	SUM.POSOBENIE OCHR.		22	27	32	39	0	TR	O	Y	O	Y	1	N	N	R	N	Y	Alarm 1 (Hupenbefehl)	N	N
150	152	T202	TERC	7SJ512	SUM.ZRUS.POSOB.OCHR.		22	27	32	39	0	TR	O	Y	O	Y	1	N	N	R	N	Y	Alarm 1 (Hupenbefehl)	N	N
150	161	T202	TERC	7SJ512	SUM.GEN.VYP.IMPULZ		22	27	32	39	0	TR	O	Y	O	Y	1	N	N	R	N	Y	Alarm 1 (Hupenbefehl)	N	N
150	171	T202	TERC	7SJ512	VYPIN.PRUD. L1 I/In=		22	27	32	39	0	NV	O	Y	O	Y	1	N	N	R	N	Y	Alarm 1 (Hupenbefehl)	N	N
150	172	T202	TERC	7SJ512	VYPIN.PRUD. L2 I/In=		22	27	32	39	0	NV	O	Y	O	Y	1	N	N	R	N	Y	Alarm 1 (Hupenbefehl)	N	N
150	173	T202	TERC	7SJ512	VYPIN.PRUD. L3 I/In=		22	27	32	39	0	NV	O	Y	O	Y	1	N	N	R	N	Y	Alarm 1 (Hupenbefehl)	N	N
167	11	T202	TERC	7SJ512	O.PRETAZ. VYPNUTA	KON ZAC	22	27	32	39	75	SI	R/C	N				N	N	R/C	N	Y		N	N
167	12	T202	TERC	7SJ512	O.PRETAZ. BLOKOV.	KON ZAC	22	27	32	39	75	SI	R/C	N				N	N	R/C	N	Y		N	N
167	13	T202	TERC	7SJ512	O.PRETAZ. V CINNOSTI	KON ZAC	22	27	32	39	75	SI	R/C	N				N	N	R/C	N	Y		N	N
167	15	T202	TERC	7SJ512	O.PRETAZ. PRUD.VYSTR	KON ZAC	22	27	32	39	75	SI	R/C	N				N	N	R/C	N	Y		N	N
167	16	T202	TERC	7SJ512	O.PRETAZ. TEPEL.VYSTR	KON ZAC	22	27	32	39	75	SI	R/C	N				N	N	R/C	N	Y		N	N
167	21	T202	TERC	7SJ512	O.PRETAZ. VYP.POVEL		22	27	32	39		TR	O	N				N	N	R	N	Y		N	N

Proprietary data, company confidential. All rights reserved.
Confie a titre de secret d'entreprise. Tous droits reservés.
Comunicado como segredo empresarial. Reservados todos os direitos.
Confiado como secreto industrial. Nos reservamos todos los derechos.
The reproduction, transmission or use of this document or its is not permitted without express written authority.
Offenders will be liable for damages. All rights, including rights created by patent grant or registration of a utility model or design, are reserved.

Documentation structur: Standard
Source file: KO050722.ODA

Rev.	Remarks	Date	Name	Date	22.07.2005	VSZ KOSICE	SIEMENS AG ISA TOOLS	Substation control system 6MB
				Drawn	LANG			Numerical protection device:
				Appr.				Indications
				Norm		Orig./Repl. 1/Repl. by		Table

T = /BE 107
+
-S104

Station:
Device K02 7UT513
Device type: 7UT51
Function type: 7UT51
Manufact.: SIEMENS

Packet number: 3
Version number: 0

Connection Device: K02 EAG
Subrack: K02 7UT513
Module:
Comm. processor:
Channel connection
UART: 2
MUX:

Function type	Info number	Section	Bay	Logical device	Lower limit	Value text	Column section	Column bay	Column logical device	Column information	Column value text	Indication type	Entry in event list	Entry in alarm list	Acknowledge	Display in indication area	Indication class	Entry in SML	Display in diagram	Archive	Operational indications	Protection indications	Command derivation	Tel ctrl FP/SC	Command output
	19	R10	KAB	7UT512	NASTAVENIE LED ZOBR.		22	27	32	39	0	TR	O	N				N	N	R	N	Y		N	N
	22	R10	KAB	7UT512	PARAMETRIZACIA OCHRANY	KON ZAC	22	27	32	39	75	SI	R/C	N				N	N	R/C	N	Y		N	N
	23	R10	KAB	7UT512	PARAMETRIZ.AKT.SADA A	KON ZAC	22	27	32	39	75	SI	R/C	N				N	N	R/C	N	Y		N	N
	24	R10	KAB	7UT512	PARAMETRIZ.AKT.SADA B	KON ZAC	22	27	32	39	75	SI	R/C	N				N	N	R/C	N	Y		N	N
	25	R10	KAB	7UT512	PARAMETRIZ.AKT.SADA C	KON ZAC	22	27	32	39	75	SI	R/C	N				N	N	R/C	N	Y		N	N
	26	R10	KAB	7UT512	PARAMETRIZ.AKT.SADA D	KON ZAC	22	27	32	39	75	SI	R/C	N				N	N	R/C	N	Y		N	N
	27	R10	KAB	7UT512	OCHRANA NADOBY VYPNUTIE	KON ZAC	22	27	0	39	75	SI	N	N				N	N	N				N	N
	68	R10	KAB	7UT512	DIF.O:VYP.IMPULZ		22	27	32	39		TR	O	Y	O	Y	1	N	N	R	N	Y	Alarm 1 (Hupenbefehl)	N	N
	86	R10	KAB	7UT512	DIF.O:VYP.IMP.L1		22	27	32	39		TR	N	N				N	N	N				N	N
	87	R10	KAB	7UT512	DIF.O:VYP.IMP.L2		22	27	32	39		TR	N	N				N	N	N				N	N
	88	R10	KAB	7UT512	DIF.O:VYP.IMP.L3		22	27	32	39		TR	N	N				N	N	N				N	N
51	131	R10	KAB	7UT512	VAZBA 1 JE VYPNUTA	KON ZAC	22	27	32	39	75	SI	R/C	N				N	N	R/C	N	Y		N	N
51	133	R10	KAB	7UT512	VAZBA 1 V CINNOSTI	KON ZAC	22	27	32	39	75	SI	R/C	N				N	N	R/C	N	Y		N	N
51	136	R10	KAB	7UT512	VAZBA 1 POPUD	KON ZAC	22	27	32	39	78	SI	R/C	Y	R/C	Y	1	N	N	R/C	N	Y	Alarm 1 (Hupenbefehl)	N	N
51	137	R10	KAB	7UT512	VAZBA 1 VYP.IMPULZ		22	27	32	39		TR	O	Y	O	Y	1	N	N	R	N	Y	Alarm 1 (Hupenbefehl)	N	N
62	101	R10	KAB	7UT512	REZ.NADPR.O.VYPNUTA	KON ZAC	22	27	32	39	75	SI	R/C	N				N	N	R/C	N	Y		N	N
62	102	R10	KAB	7UT512	REZ.NADPR.O.BLOKOV.	KON ZAC	22	27	32	39	75	SI	R/C	N				N	N	R/C	N	Y		N	N
62	103	R10	KAB	7UT512	REZ.NADPR.O. V CINN.	KON ZAC	22	27	32	39	75	SI	R/C	N				N	N	R/C	N	Y		N	N
62	111	R10	KAB	7UT512	REZ.GEN.POPUD		22	27	32	39		TR	O	Y	O	Y	1	N	N	R	N	Y	Alarm 1 (Hupenbefehl)	N	N
62	112	R10	KAB	7UT512	REZ.POPUD V L1	KON ZAC	22	27	32	39	78	SI	R/C	Y	R/C	Y	1	N	N	R/C	N	Y	Alarm 1 (Hupenbefehl)	N	N
62	113	R10	KAB	7UT512	REZ.POPUD V L2	KON ZAC	22	27	32	39	78	SI	R/C	Y	R/C	Y	1	N	N	R/C	N	Y	Alarm 1 (Hupenbefehl)	N	N
62	114	R10	KAB	7UT512	REZ.POPUD V L3	KON ZAC	22	27	32	39	78	SI	R/C	Y	R/C	Y	1	N	N	R/C	N	Y	Alarm 1 (Hupenbefehl)	N	N
62	121	R10	KAB	7UT512	REZ.POPUD SKRAT.ST.		22	27	32	39		TR	O	Y	O	Y	1	N	N	R	N	Y	Alarm 1 (Hupenbefehl)	N	N
62	122	R10	KAB	7UT512	REZ.POPUD NADPR.ST.		22	27	32	39		TR	O	Y	O	Y	1	N	N	R	N	Y	Alarm 1 (Hupenbefehl)	N	N
62	141	R10	KAB	7UT512	REZ.SKRAT.O.CAS		22	27	32	39		TR	O	Y	O	Y	1	N	N	R	N	Y	Alarm 1 (Hupenbefehl)	N	N
62	142	R10	KAB	7UT512	REZ.NADPR.O.CAS		22	27	32	39		TR	O	Y	O	Y	1	N	N	R	N	Y	Alarm 1 (Hupenbefehl)	N	N
62	151	R10	KAB	7UT512	REZ.GEN.VYP.IMPULZ		22	27	32	39		TR	O	Y	O	Y	1	N	N	R	N	Y	Alarm 1 (Hupenbefehl)	N	N
75	15	R10	KAB	7UT512	DIF.O:VYPNUTA	KON ZAC	22	27	32	39	75	SI	R/C	N				N	N	R/C	N	Y		N	N
75	16	R10	KAB	7UT512	DIF.O:BLOKOVANA	KON ZAC	22	27	32	39	75	SI	R/C	N				N	N	R/C	N	Y		N	N
75	17	R10	KAB	7UT512	DIF.O:V CINNOSTI	KON ZAC	22	27	32	39	75	SI	R/C	N				N	N	R/C	N	Y		N	N
75	21	R10	KAB	7UT512	DIF.O: ONESK.IDIFF>		22	27	32	39		TR	O	Y	O	Y	1	N	N	R	N	Y	Alarm 1 (Hupenbefehl)	N	N
75	22	R10	KAB	7UT512	DIF.O: ONESK.IDIFF>>		22	27	32	39		TR	O	Y	O	Y	1	N	N	R	N	Y	Alarm 1 (Hupenbefehl)	N	N

Proprietary data, company confidential. All rights reserved.
Confiado a tres da secret dentreprise. Tous droits reservés.
Comunicado como segredo empresarial. Reservados todos os direitos.
Confiado como secreto industrial. Nos reservamos todos los derechos.
The reproduction, transmission or use of this document or its is not permited without expires written authority.
Offenders will be liable for damages. All rights, including rights created by patent grant or registration of a utility model or design, are reserved.

Documentation structur: Standard
Source file: KO050722.ODA

Date	22.07.2005	VSZ KOSICE	SIEMENS AG ISATOOLS	Substation control system 6MB
Drawn	LANG			Numerical protection device:
Appr.				Indications
Remarks	Date	Name Norm	Orig./Repl. 1/Repl. by	Table

T = /BE 108
+
-S104
Page

Station:
Device K02 7UT513
Device type: 7UT51
Function type: 7UT51
Manufact.: SIEMENS

Packet number: 3
Version number: 0

Connection Device: K02 EAG
Subrack: K02 7UT513
Module:
Comm. processor:
Channel connection
UART: 2
MUX:

Function type	Info number	Section	Bay	Logical device	Lower limit	Value text	Column section	Column bay	Column logical device	Column information	Column value text	Indication type	Entry in event list	Entry in alarm list	Acknowledge	Display in indication area	Indication class	Entry in SML	Display in diagram	Archive	Operational indications	Protection indications	Command derivation	Tel ctrl FP/SC	Command output
75	31	R10	KAB	7UT512	DIF.O:GEN.POPUD	KON ZAC	22	27	32	39	78	SI	R/C	Y	R/C	Y	1	N	N	R/C	N	Y	Alarm 1 (Hupenbefehl)	N	N
75	81	R10	KAB	7UT512	DIF.O:NADPR.VYP.IMP.L1	KON ZAC	22	27	32	39	78	SI	N	N				N	N	N				N	N
75	82	R10	KAB	7UT512	DIF.O:NADPR.VYP.IMP.L2	KON ZAC	22	27	32	39	78	SI	N	N				N	N	N				N	N
75	83	R10	KAB	7UT512	DIF.O:NADPR.VYP.IMP.L3	KON ZAC	22	27	32	39	78	SI	N	N				N	N	N				N	N
75	84	R10	KAB	7UT512	DIF.O:SKRAT.VYP.IMP.L1	KON ZAC	22	27	32	39	78	SI	N	N				N	N	N				N	N
75	85	R10	KAB	7UT512	DIF.O:SKRAT.VYP.IMP.L2	KON ZAC	22	27	32	39	78	SI	N	N				N	N	N				N	N
75	86	R10	KAB	7UT512	DIF.O:SKRAT.VYP.IMP.L3	KON ZAC	22	27	32	39	78	SI	N	N				N	N	N				N	N
75	91	R10	KAB	7UT512	DIF.O:NADPR.ST.VYP.IMP		22	27	32	39		TR	O	Y	O	Y	1	N	N	R	N	Y	Alarm 1 (Hupenbefehl)	N	N
75	92	R10	KAB	7UT512	DIF.O:SKRAT.ST.VYP.IMP		22	27	32	39		TR	O	Y	O	Y	1	N	N	R	N	Y	Alarm 1 (Hupenbefehl)	N	N
135	81	R10	KAB	7UT512	OCHRANA PRIPRAVENA	KON ZAC	22	27	32	39	75	SI	R/C	N				N	N	R/C	N	Y		N	N
135	130	R10	KAB	7UT512	BUFER SIGN. PREPLNENY		22	27	32	39	0	TR	O	N				N	N	R	N	Y		N	N
135	131	R10	KAB	7UT512	STRATA SIGN. PRE LSA		22	27	32	39	0	TR	O	N				N	N	R	N	Y		N	N
135	166	R10	KAB	7UT512	PORUCHA V/V JEDN.C.1	KON ZAC	22	27	32	39	75	SI	R/C	N				N	N	R/C	N	Y		N	N
135	167	R10	KAB	7UT512	PORUCHA V/V JEDN.C.2	KON ZAC	22	27	32	39	75	SI	R/C	N				N	N	R/C	N	Y		N	N
135	231	R10	KAB	7UT512	PORUCHA V ENERG. SYST.	KON ZAC	22	27	32	39	78	SI	R/C	Y	R/C	Y	1	N	N	R/C	N	Y	Alarm 1 (Hupenbefehl)	N	N
150	42	R10	KAB	7UT512	BUCHHOLZ VYPNUTIE	KON ZAC	22	27	0	39	75	SI	N	N				N	N	N				N	N
150	151	R10	KAB	7UT512	SUM.POSOBENIE OCHR.		22	27	32	39	0	TR	O	Y	O	Y	1	N	N	R	N	Y	Alarm 1 (Hupenbefehl)	N	N
150	152	R10	KAB	7UT512	SUM.ZRUS.POSOB.OCHR.		22	27	32	39	0	TR	O	Y	O	Y	1	N	N	R	N	Y	Alarm 1 (Hupenbefehl)	N	N
150	161	R10	KAB	7UT512	SUM.GEN.VYP.IMPULZ		22	27	32	39	0	TR	O	Y	O	Y	1	N	N	R	N	Y	Alarm 1 (Hupenbefehl)	N	N
167	61	R10	KAB	7UT512	O.PRETAZ.1 VYPNUTA	KON ZAC	22	27	32	39	75	SI	R/C	N				N	N	R/C	N	Y		N	N
167	62	R10	KAB	7UT512	O.PRETAZ.1 BLOKOV.	KON ZAC	22	27	32	39	75	SI	R/C	N				N	N	R/C	N	Y		N	N
167	63	R10	KAB	7UT512	O.PRETAZ.1 V CINN.	KON ZAC	22	27	32	39	75	SI	R/C	N				N	N	R/C	N	Y		N	N
167	65	R10	KAB	7UT512	O.PRETAZ.1 PRUD.VYSTR	KON ZAC	22	27	32	39	75	SI	R/C	N				N	N	R/C	N	Y		N	N
167	66	R10	KAB	7UT512	O.PRETAZ.1 TEPEL.VYSTR	KON ZAC	22	27	32	39	75	SI	R/C	N				N	N	R/C	N	Y		N	N
167	71	R10	KAB	7UT512	O.PRETAZ.1 VYP.POVEL	KON ZAC	22	27	32	39	78	SI	R/C	Y	R/C	Y	1	N	N	R/C	N	Y	Alarm 1 (Hupenbefehl)	N	N
167	111	R10	KAB	7UT512	O.PRETAZ.2 VYPNUTA	KON ZAC	22	27	32	39	75	SI	R/C	N				N	N	R/C	N	Y		N	N
167	112	R10	KAB	7UT512	O.PRETAZ.2 BLOKOV.	KON ZAC	22	27	32	39	75	SI	R/C	N				N	N	R/C	N	Y		N	N
167	113	R10	KAB	7UT512	O.PRETAZ.2 V CINN.	KON ZAC	22	27	32	39	75	SI	R/C	N				N	N	R/C	N	Y		N	N
167	115	R10	KAB	7UT512	O.PRETAZ.2 PRUD.VYSTR	KON ZAC	22	27	32	39	75	SI	R/C	N				N	N	R/C	N	Y		N	N
167	116	R10	KAB	7UT512	O.PRETAZ.2 TEPEL.VYSTR	KON ZAC	22	27	32	39	75	SI	R/C	N				N	N	R/C	N	Y		N	N
167	121	R10	KAB	7UT512	O.PRETAZ.2 VYP.POVEL	KON ZAC	22	27	32	39	78	SI	R/C	Y	R/C	Y	1	N	N	R/C	N	Y	Alarm 1 (Hupenbefehl)	N	N

Proprietary data, company confidential. All rights reserved
Confia a tire de secret d'entreprise. Tous droits reservs.
Comunicado como segredo empresarial. Reservados todos os direitos.
Confiado como secreto industrial. Nos reservamos todos los derechos.
The reproduction, transmission or use of this document or its is not permitted without express written authority. Offenders will be liable for damages. All rights, including rights created by patent grant or registration of a utility model or design, are reserved

Documentation structur: Standard
Source file: K0050722.ODA

Rev.	Remarks	Date	Name Norm	Date 22.07.2005	Drawn LANG	Appr.	Orig./Repl. 1/Repl. by

VSZ KOSICE

SIEMENS AG
ISAIOOLS

Substation control system 6MB
Numerical protection device:
Indications
Table

T = /BE 109
+
-S104
Page 109

Proprietary data, company confidential. All rights reserved
Confia a tina de secret dentreprise. Tous droits r.serv.s
Comunicado como segredo empresarial. Reservados todos os direitos.
Confiado como secreto industrial. Nos reservamos todos los derechos.
The reproduction, transmission or use of this document or its
is not permitted without expres written authority.
Offenders will be liable for damages. All rights, including rights
created by patent grant or registration of a utility model or design, are reserved

Station: UW KOSICE
Device: EA01 EAG/1
Device type: 6MB5220-1
Packet numbe 8
Version no.: 1

Connection:
Device: LZG
Subrack: LZG-BGT
Module: AST 2
UART: 2
MUX: 8

General definitions:

Rated auxiliary voltage: 60 V, 110 V, 125 V DC
LZG monitoring: Indication
Ext. met. value tr. comm.: No
LIVE contact: No
Buffer type: I/O unit normal
Timeout monitoring: Yes

Scan cycle for ind. input:

Scan cycle for fault ind.: 10
Scan number 02: 10
Scan cycle for pos. ind.: 100
Scan number 03: 3
Scan cycle for op. ind.: 1000
Scan number 04: 1

Specifications for chatter dis

Analog interval in s:
Blockage time in s:
Number of test cycle
Number of block. cyc

Input	Connect designation	Section	Bay	Logical device	Lower limit	Value text		Column section	Column bay	Column logical device	Column information	Column value text	With command	Indication type	Entry in event list	Entry in alarm list	Acknowledge	Display in indication area	Indication class	Entry in SML	Display in diagram	Display of intermed. pos.	Acknowledge	Display under voltage level	Indication class	Archive	Operational indications	Protection indications	Filt. of raised & cleared	Filtering of intermed. pos.	Bay blockage
1	8D4	R110	EA01	ODPOJOVAC Q2	SCHALTZUSTAND	vyp.		22	27	39	0	75	LZM	DI	O					N	Y	N	O	Y	2	R	Y	N		N	N
2	7D1	R110	EA01	ODPOJOVAC Q2	SCHALTZUSTAND	zap.		22	27	39	0	75	LZM	DI	O					N	Y	N	O	Y	2	R	Y	N		N	N
3	7D2	R110	EA01	ODPOJOVAC Q1	SCHALTZUSTAND	vyp.		22	27	39	0	75	LZM	DI	O					N	Y	N	O	Y	2	R	Y	N		N	N
4	7D3	R110	EA01	ODPOJOVAC Q1	SCHALTZUSTAND	zap.		22	27	39	0	75	LZM	DI	O					N	Y	N	O	Y	2	R	Y	N		N	N
5	7D4																														
6	6D1																														
7	6D3																														
8	6D4																														
9	5D1																														
10	5D2																														
11	5D3																														
13	8FA																														
14	7F1	R110	EA01		8TK PORUCHA	KON	ZAC	22	27	0	39	75	PV	SI	R/C	Y	R/C	Y	1	N	N					R/C	Y	N	N		N
15	7F2	R110	EA01		VYPN.VYPINAC.BEZ POVELU	KON	ZAC	22	27	0	39	75	PV	TR	O	Y	O	Y	1	N	N					R	Y	N			N
16	7F3	R110	EA01		PREVADZKA S1	KON	ZAC	22	27	0	39	75	PV	SI	R/C	Y	R/C	Y	1	N	Y		N	N		R/C	Y	N	N		N
17	7F4	R110	EA01		S5 POLOHA VYPN./MIESTNE	KON	ZAC	22	27	0	39	75	PV	SI	R/C	Y	R/C	Y	1	N	Y		N	N		R/C	Y	N	N		N
18	6F1	R110	EA01		CHYBA OBSLUHY	KON	ZAC	22	27	0	39	75	PV	SI	R/C	N				N	N					R/C	Y	N	N		N
19	6F3	R110	EA01		PREKROCENIE CASU BEHU	KON	ZAC	22	27	0	39	75	PV	SI	R/C	N				N	N					R/C	Y	N	N		N
20	6F4																														
21	5F1	R110	EA01		STRATA js./st. NAPATI	KON	ZAC	22	27	0	39	75	PV	SI	R/C	Y	R/C	Y	1	N	N					R/C	N	Y	N		N
22	5F2																														
23	5F3	R110	EA01		VYPNUTIE SYNCHRONIZACIE	KON	ZAC	22	27	0	39	75	PV	SI	R/C	Y	R/C	Y	1	N	Y		N	N		R/C	Y	N	N		N

Documentation structur: Standard
Source file: KO050722.ODA

Date	22.07.2005	VSZ KOSICE	SIEMENS AG ISATOOLS
Drawn	LANG		
Appr.			
Norm		Orig./Repl. 1/Repl. by	

Remarks | Date | Name

Substation control system 6MB
Compact I/O unit:
Indications
Table

T = /BG 1
+
-S106
Page 1

Proprietary data, company confidential. All rights reserved.
Confie a titre de secret d'entreprise. Tous droits réservés.
Comunicado como segredo empresarial. Reservados todos os direitos.
Confiado como secreto industrial. Nos reservamos todos los derechos.

The reproduction, transmission or use of this document or its is not permitted without express written authority. Offenders will be liable for damages. All rights, including rights created by patent grant or registration of a utility model or design, are reserved.

Documentation structur: Standard
Source file: KO050722.ODA

Station: UW KOSICE
Device: EA01 EAG/1
Device type: 6MB5220-1
Packet numbe 8
Version no.: 1

Connection:
Device: LZG
Subrack: LZG-BGT
Module: AST 2
UART: 2
MUX: 8

General definitions:
Rated auxiliary voltage: 60 V, 110 V, 125 V DC
LZG monitoring: Indication
Ext. met. value tr. comm.: No
LIVE contact: No
Buffer type: I/O unit normal
Timeout monitoring: Yes

Scan cycle for ind. input:
Scan cycle for fault ind.: 10
Scan number 02: 10
Scan cycle for pos. ind.: 100
Scan number 03: 3
Scan cycle for op. ind.: 1000
Scan number 04: 1

Specifications for chatter dis
Analog interval in s:
Blockage time in s:
Number of test cycle
Number of block. cyc

Input	Connect designation	Monitored as feedback	Checkback monit. time in s	Command derivation	Indication derivation	Remote transmission FP: Master station	Name of telegram	Name of info element
1	8D4	Y	20.0			IEC 870-5-101	Meldungstelegramm DM	302
2	7D1	Y	20.0			IEC 870-5-101	Meldungstelegramm DM	302
3	7D2	Y	20.0			IEC 870-5-101	Meldungstelegramm DM	301
4	7D3	Y	20.0			IEC 870-5-101	Meldungstelegramm DM	301
5	7D4							
6	6D1							
7	6D3							
8	6D4							
9	5D1							
10	5D2							
11	5D3							
13	8FA							
14	7F1	N		Alarm 1 (Hupenbefehl)	KVIT 8TK			
15	7F2	N		Alarm 1 (Hupenbefehl)	KVIT 8TK			
16	7F3	N		Alarm 1 (Hupenbefehl)				
17	7F4	N		Alarm 1 (Hupenbefehl)				
18	6F1	N		Alarm 1 (Hupenbefehl)	KVIT 8TK			
19	6F3	N		Alarm 1 (Hupenbefehl)	KVIT 8TK			
20	6F4							
21	5F1	N		Alarm 1 (Hupenbefehl)				
22	5F2							
23	5F3	N		Alarm 1 (Hupenbefehl)				

Rev.	Remarks	Date	Name	Date	22.07.2005	VSZ KOSICE	SIEMENS AG ISA TOOLS	Substation control system 6MB
				Drawn	LANG			Compact I/O unit:
				Appr.				Indications
				Norm		Orig./Repl. 1/Repl. by		Table

T = /BG 2
+
-S106
Page 2

Station: UW KOSICE
Device: EA01 EAG/1
Device type: 6MB5220-1

Output	Connect designation	Section	Bay	Logical device	Lower limit	Value text	Column section	Column bay	Column logical device	Column information	Column value text	Type of command	Entry in event list	Entry in alarm list	Entry in SML	Display in diag. as select. field	Archive	Operational indications	SW termination time in s	Checkback monit. time in s	Interlocking type:
1	3C1/3C2	R110	EA01	ODPOJOVAC Q2	SCHALTZUSTAND	8D4 vyp.	22	27	39	0	75	DC	O		N	PV	R	Y	0.6	20.0	SCHALTGERÄT
2	3C3/3C4	R110	EA01	ODPOJOVAC Q2	SCHALTZUSTAND	8D4 zap.	22	27	39	0	75	DC	O		N	PV	R	Y	0.6	20.0	SCHALTGERÄT
3	4C1/4C2	R110	EA01	ODPOJOVAC Q1	SCHALTZUSTAND	7D2 vyp.	22	27	39	0	75	DC	O		N	PV	R	Y	0.6	20.0	SCHALTGERÄT
4	4C3/4C4	R110	EA01	ODPOJOVAC Q1	SCHALTZUSTAND	7D2 zap.	22	27	39	0	75	DC	O		N	PV	R	Y	0.6	20.0	SCHALTGERÄT
5	4D1/4D2															PV					
6	4D3/4D4															PV					
7	2D1/2D2	R110	EA01		KVITOVANIE	KON ZAC	22	27	0	39	75	SC	O	N	N	PV	R	N	0.6		SCHALTGERÄT
9	3E1/3E2															PV					
10	3E3/3E4															PV					
11	4E1/4E2															PV					
12	4E3/4E4															PV					
13	4F1/4F2															PV					
14	4F3/4F4															PV					
15	2F1/2F2	R110	EA01		DEBLOKACIA BLOKOVANIA	KON ZAC	22	27	0	39	75	SC	R/C	N	N	PV	R/C	Y			SCHALTGERÄT

Proprietary data, company confidential. All rights reserved.
Confie a titre de secret d'entreprise. Tous droits réservés.
Comunicado como segredo empresarial. Reservados todos os direitos.
Confiado como secreto industrial. Nos reservamos todos los derechos.

The reproduction, transmission or use of this document or its is not permitted without express written authority.
Offenders will be liable for damages. All rights, including rights created by patent grant or registration of a utility model or design, are reserved.

Documentation structur: Standard
Source file: KO050722.ODA

Remarks	Date	Name	Norm	Date	22.07.2005	VSZ KOSICE	SIEMENS AG ISAOOLS	Substation control system 6MB Compact I/O unit: Commands Table	T = /BG 3 + -S106	Page
				Drawn	LANG					
				Appr.						
						Orig./Repl. 1/Repl. by				

Station: UW KOSICE
Device: EA01 EAG/1
Device type: 6MB5220-1

Analog channel no.	Connect designation	Section	Bay	Logical device	Lower limit	Display value	Dimension	Zero suppression f. display in %	Text for display	Bay blockage	Zero suppression on acq. in %	Thres val. for switchover in %	Process analog value in I/O uni	Knee point: Acquisition value in mA	Knee point: Display value	With live-zero monitoring	Display in diagram
1	STROM L2															PV	
2	STROM L1															PV	
3	STROM L3															PV	
4	UL1-UL2	R110	EA01	MESSW. SPANNUNG W1	NAPATIE L1-L2	110.00	KV	5.0	NAPATIE L1-L2	N		0.0	N			PV	Y
5	UL1-UL3	R110	EA01	MESSW. SPANNUNG W1	NAPATIE L1-L3	110.00	KV	5.0	NAPATIE L1-L3	N		0.0	N			PV	Y
6	UL2-UL3	R110	EA01	MESSW. SPANNUNG W1	NAPATIE L2-L3	110.00	KV	5.0	NAPATIE L2-L3	N		0.0	N			PV	Y
7	W-LEISTUNG	R110	EA01		FREKVENCIA W1	55.00	Hz	PV	FREKVENCIA W1	N	5.0	0.0	N	0.00	45.00	PV	Y
8	B-LEISTUNG															PV	

Proprietary data, company confidential. All rights reserved.
Confie a titre de secret d'entreprise. Tous droits reservs.
Comunicado como segredo empresarial. Reservados todos os direitos.
Confiado como secreto industrial. Nos reservamos todos los derechos.
The reproduction, transmission or use of this document or its is not permitted without express written authority.
Offenders will be liable for damages. All rights, including rights created by patent grant or registration of a utility model or design, are reserved

Documentation structur: Standard
Source file: KO050722.ODA

Rev.	Remarks	Date	Name	Date	22.07.2005	VSZ KOSICE	SIEMENS AG ISA TOOLS	Substation control system 6MB Compact I/O unit: Analog values Table	T = /BG 4 + -S106	Page 4
				Drawn	LANG					
				Appr.						
				Norm		Orig./Repl. 1/Repl. by				

Station: UW KOSICE
Device: EA01 EAG/1
Device type: 6MB5220-1

Analog channel no.	Connect designation	Archive	Analog recording	Recording mode	No. of val. to be averaged	Scan interval in s	Analog value type	Max. value of analog value	Keep non-return pointer	Calculated demand value	Derive percentage value	Derive metered value	Static limit monitoring: Filtering time in s	Lower limit 1	Indication at lower limit 1	Lower limit 2	Indication at lower limit 2	Upper limit 1	Indication at higher limit 1	Upper limit 2	Indication at higher limit 2
1	STROM L2											PV									
2	STROM L1											PV									
3	STROM L3											PV									
4	UL1-UL2	Y	PERM	Analog value direct		900	PPV	132.00	PV	PV	PV	PV	0	99.00	NAPATIE L1-L2 DH1			121.00	NAPATIE L1-L2 HH1		
5	UL1-UL3	Y	PERM	Analog value direct		900	PPV	132.00	PV	PV	PV	PV	0	99.00	NAPATIE L1-L3 DH1			121.00	NAPATIE L1-L3 HH1		
6	UL2-UL3	Y	PERM	Analog value direct		900	PPV	132.00	PV	PV	PV	PV	0	99.00	NAPATIE L2-L3 DH1			121.00	NAPATIE L2-L3 HH1		
7	W-LEISTUNG	Y	PERM	Analog value direct		900	F	66.00	PV	PV	PV	PV									
8	B-LEISTUNG											PV									

Proprietary data, company confidential. All rights reserved.
Confie a titre de secret d'entreprise. Tous droits reservs.
Comunicado como segredo empresarial. Reservados todos os direitos.
Confiado como secreto industrial. Nos reservamos todos los derechos.
The reproduction, transmission or use of this document or its is not permitted without express written authority.
Offenders will be liable for damages. All rights, including rights created by patent grant or registration of a utility model or design, are reserved

Documentation structur: Standard
Source file: KO050722.ODA

			Date	22.07.2005	VSZ KOSICE	SIEMENS AG ISA TOOLS	Substation control system 6MB
			Drawn	LANG			Compact I/O unit:
			Appr.				Analog values
Remarks	Date	Name	Norm		Orig./Repl. 1/Repl. by		Table

T = /BG 5
+
-S106
Page 5

Proprietary data, company confidential. All rights reserved.
Confia a titre de secret d'entreprise. Tous droits reservs.
Comunicado como segredo empresarial. Reservados todos os direitos.
Confiado como secreto industrial. Nos reservamos todos los derechos.

The reproduction, transmission or use of this document or its contents is not permitted without expres written authority. Offenders will be liable for damages. All rights, including rights created by patent grant or registration of a utility model or design, are reserved.

Station: UW KOSICE
Device: EA02 EAG
Device type: 6MB5220-1

Analog channel no.	Connect designation	Master station	Name of telegram	Name of info element
		Teletrans. FP raw val.		
1	STROM L2	IEC 870-5-101	Meßwerttelegramm	710
2	STROM L1	IEC 870-5-101	Meßwerttelegramm	711
3	STROM L3	IEC 870-5-101	Meßwerttelegramm	712
4	UL1-UL2	IEC 870-5-101	Meßwerttelegramm	714
5	UL1-UL3			
6	UL2-UL3			
7	W-LEISTUNG	IEC 870-5-101	Meßwerttelegramm	713
8	B-LEISTUNG			

Documentation structur: Standard
Source file: KO050722.ODA

Date	22.07.2005	VSZ KOSICE	SIEMENS AG ISAOOLS	Substation control system 6MB	T = /BG 17
Drawn	LANG			Compact I/O unit:	+
Appr.				Analog values	-S106 Page 17
Remarks	Date	Name Norm	Orig./Repl. 1/Repl. by	Table	

Proprietary data, company confidential. All rights reserved
Confie a l'ire de secret d'entreprise. Tous droits reservis
Comunicado como segredo empresarial. Reservados todos os direitos.
Confiado como secreto industrial. Nos reservamos todos los derechos.

The reproduction, transmission or use of this document or its is not permitted without express written authority. Offenders will be liable for damages. All rights, including rights created by patent grant or registration of a utility model or design, are reserved

Station: UW KOSICE
Device: EA02 EAG
Device type: 6MB5220-1

Analog channel no.	Connect designation	Archive	Analog recording	Recording mode	No. of val. to be averaged	Scan interval in s	Analog value type	Max. value of analog value	Keep non-return pointer	Calculated demand value	Derive percentage value	Derive metered value	Static limit monitoring: Filtering time in s	Lower limit 1	Indication at lower limit 1	Lower limit 2	Indication at lower limit 2	Upper limit 1	Indication at higher limit 1	Upper limit 2	Indication at higher limit 2
1	STROM L2	Y	PERM	Analog value direct		900	CUR	240.00	PV	PV	PV	PV	0					239.90	PRUD L2 HH1		
2	STROM L1	Y	PERM	Analog value direct		900	CUR	240.00	PV	PV	PV	PV	0					239.90	PRUD L1 HH1		
3	STROM L3	Y	PERM	Analog value direct		900	CUR	240.00	PV	PV	PV	PV	0					239.90	PRUD L3 HH1		
4	UL1-UL2	Y	PERM	Analog value direct		900	PV	76.21	PV	PV	PV	PV	0	57.15	NAPATIE L1 DH1			69.85	NAPATIE L1 HH1		
5	UL1-UL3											PV									
6	UL2-UL3											PV									
7	W-LEISTUNG	Y	PERM	Analog value direct		900	AP	45.72	PV	PV	PV	PV									
8	B-LEISTUNG											PV									

Documentation structur: Standard
Source file: KO050722.ODA

Rev.	Remarks	Date	Name	Norm

Date 22.07.2005
Drawn LANG
Appr.

VSZ KOSICE
Orig./Repl. 1/Repl. by

SIEMENS AG
ISATOOLS

Substation control system 6MB
Compact I/O unit:
Analog values
Table

T = /BG 16
+
-S106
Page 16

Station: UW KOSICE
Device: EA02 EAG
Device type: 6MB5220-1

Analog channel no.	Connect designation	Section	Bay	Logical device	Lower limit	Display value	Dimension	Zero suppression f. display in %	Text for display	Bay blockage	Thres val. for switchover in %	Process analog value in I/O uni	With live-zero monitoring	Display in diagram
1	STROM L2	R110	EA02	MESSWERTE STROM	PRUD L2	200.00	A	1.0	PRUD L2	N	0.0	N	PV	Y
2	STROM L1	R110	EA02	MESSWERTE STROM	PRUD L1	200.00	A	1.0	PRUD L1	N	0.0	N	PV	N
3	STROM L3	R110	EA02	MESSWERTE STROM	PRUD L3	200.00	A	1.0	PRUD L3	N	0.0	N	PV	N
4	UL1-UL2	R110	EA02	MESSWERTE SPANNUNG	NAPATIE L1	63.50	KV	10.0	NAPATIE L1	N	0.0	N	PV	Y
5	UL1-UL3												PV	
6	UL2-UL3												PV	
7	W-LEISTUNG	R110	EA02		VYKON CINNY	38.10	MW	1.0	VYKON CINNY	N	0.0	N	PV	Y
8	B-LEISTUNG												PV	

Proprietary data, company confidential. All rights reserved.
Confie a titre de secret d'entreprise. Tous droits r,serv,s.
Comunicado como segredo empresarial. Reservados todos os direitos.
Confiado como secreto industrial. Nos reservamos todos los derechos.

The reproduction, transmission or use of this document or its is not permitted without express written authority.
Offenders will be liable for damages. All rights, including rights created by patent grant or registration of a utility model or design, are reserved

Documentation structur: Standard
Source file: KO050722.ODA

Remarks	Date	Name	Date	22.07.2005	VSZ KOSICE	SIEMENS AG ISAIOOLS	Substation control system 6MB Compact I/O unit: Analog values Table	T = /BG 15 + -S106 Page
			Drawn	LANG				
			Appr.					
			Norm		Orig./Repl. 1/Repl. by			

Station: UW KOSICE
Device: EA02 EAG
Device type: 6MB5220-1

Output	Connect designation	Section	Bay	Logical device	Lower limit	Value text	Column section	Column bay	Column logical device	Column information	Column value text	Type of command	Entry in event list	Entry in alarm list	Entry in SML	Display in diag. as select. field	Archive	Operational indications	SW termination time in s	Checkback monit. time in s	Interlocking type:
1	3C1/3C2	R110	EA02	ODPOJOVAC Q2	SCHALTZUSTAND	8D4 vyp.	22	27	39	0	75	DC	O		N	PV	R	Y	0.6	20.0	SCHALTGERÄT
2	3C3/3C4	R110	EA02	ODPOJOVAC Q2	SCHALTZUSTAND	8D4 zap.	22	27	39	0	75	DC	O		N	PV	R	Y	0.6	20.0	SCHALTGERÄT
3	4C1/4C2	R110	EA02	ODPOJOVAC Q7	SCHALTZUSTAND	7D2 vyp.	22	27	39	0	75	DC	O		N	PV	R	Y	0.6	20.0	SCHALTGERÄT
4	4C3/4C4	R110	EA02	ODPOJOVAC Q7	SCHALTZUSTAND	7D2 zap.	22	27	39	0	75	DC	O		N	PV	R	Y	0.6	20.0	SCHALTGERÄT
5	4D1/4D2	R110	EA02	VYPINAC Q0	SCHALTZUSTAND	7D4 vyp.	22	27	39	0	75	DC	O		N	PV	R	Y	0.6	1.0	SCHALTGERÄT
6	4D3/4D4	R110	EA02	VYPINAC Q0	SCHALTZUSTAND	7D4 zap.	22	27	39	0	75	DC	O		N	PV	R	Y	0.6	1.0	SCHALTGERÄT
7	2D1/2D2	R110	EA02		KVITOVANIE	KON ZAC	22	27	0	39	75	SC	O	N	N	PV	R	N	0.6		SCHALTGERÄT
9	3E1/3E2	R110	EA02	ODPOJOVAC Q9	SCHALTZUSTAND	6D3 vyp.	22	27	39	0	75	DC	O		N	PV	R	Y	0.6	20.0	SCHALTGERÄT
10	3E3/3E4	R110	EA02	ODPOJOVAC Q9	SCHALTZUSTAND	6D3 zap.	22	27	39	0	75	DC	O		N	PV	R	Y	0.6	20.0	SCHALTGERÄT
11	4E1/4E2	R110	EA02	ODPOJOVAC Q1	SCHALTZUSTAND	5D1 vyp.	22	27	39	0	75	DC	O		N	PV	R	Y	0.6	20.0	SCHALTGERÄT
12	4E3/4E4	R110	EA02	ODPOJOVAC Q1	SCHALTZUSTAND	5D1 zap.	22	27	39	0	75	DC	O		N	PV	R	Y	0.6	20.0	SCHALTGERÄT
13	4F1/4F2	R110	EA02	ODPOJOVAC ZEMNIACI Q8	SCHALTZUSTAND	8FA vyp.	22	27	39	0	75	DC	O		N	PV	R	Y	0.6	20.0	SCHALTGERÄT
14	4F3/4F4	R110	EA02	ODPOJOVAC ZEMNIACI Q8	SCHALTZUSTAND	8FA zap.	22	27	39	0	75	DC	O		N	PV	R	Y	0.6	20.0	SCHALTGERÄT
15	2F1/2F2	R110	EA02		DEBLOKACIA BLOKOVANIA	KON ZAC	22	27	0	39	75	SC	R/C	N	N	PV	R/C	Y			SCHALTGERÄT

Proprietary data, company confidential. All rights reserved.
Confia a titre de secret d'entreprise. Tous droits reservés.
Comunicado como segredo empresarial. Reservados todos os direitos.
Confiado como secreto industrial. Nos reservamos todos los derechos.
The reproduction, transmission or use of this document or its is not permitted without express written authority.
Offenders will be liable for damages. All rights, including rights created by patent grant or registration of a utility model or design, are reserved

Documentation structur: Standard
Source file: KO050722.ODA

Rev.	Remarks	Date	Name	Date	22.07.2005	VSZ KOSICE	SIEMENS AG ISAOOLS	Substation control system 6MB
				Drawn	LANG			Compact I/O unit:
				Appr.				Commands
				Norm		Orig./Repl. 1/Repl. by		Table

T = /BG 14
+
-S106
Page 14

Proprietary data, company confidential. All rights reserved.
Confia a titre de secret d'entreprise. Tous droits reservs.
Comunicado como segredo empresarial. Reservados todos os direitos.
Confiado como secreto industrial. Nos reservamos todos los derechos.

The reproduction, transmission or use of this document or its is not permitted without express written authority.
Offenders will be liable for damages. All rights, including rights created by patent grant or registration of a utility model or design, are reserved

Station: UW KOSICE
Device: EA02 EAG
Device type: 6MB5220-1
Packet numbe 8
Version no.: 1

Connection:
Device: LZG
Subrack: LZG-BGT
Module: AST 1
UART: 2
MUX: 2

General definitions:

Rated auxiliary voltage: 60 V, 110 V, 125 V DC
LZG monitoring: Indication
Ext. met. value tr. comm.: No
LIVE contact: No
Buffer type: I/O unit normal
Timeout monitoring: Yes

Scan cycle for ind. input:

Scan cycle for fault ind.: 10
Scan number 02: 10
Scan cycle for pos. ind.: 100
Scan number 03: 3
Scan cycle for op. ind.: 1000
Scan number 04: 1

Specifications for chatter dis

Analog interval in s:
Blockage time in s:
Number of test cycle
Number of block. cyc

Input	Connect designation	Filt. of raised & cleared	Filtering of intermed. pos.	Bay blockage	Monitored as feedback	Checkback monit. time in s	Command derivation	Indication derivation	Remote transmission FP: Master station	Remote transmission FP: Name of telegram	Remote transmission FP: Name of info element
1	8D4		N	N	Y	20.0			IEC 870-5-101	Meldungstelegramm DM	312
2	7D1		N	N	Y	20.0			IEC 870-5-101	Meldungstelegramm DM	312
3	7D2		N	N	Y	20.0			IEC 870-5-101	Meldungstelegramm DM	313
4	7D3		N	N	Y	20.0			IEC 870-5-101	Meldungstelegramm DM	313
5	7D4		N	N	Y	1.0			IEC 870-5-101	Meldungstelegramm DM	310
6	6D1		N	N	Y	1.0			IEC 870-5-101	Meldungstelegramm DM	310
7	6D3		N	N	Y	20.0			IEC 870-5-101	Meldungstelegramm DM	315
8	6D4		N	N	Y	20.0			IEC 870-5-101	Meldungstelegramm DM	315
9	5D1		N	N	Y	20.0			IEC 870-5-101	Meldungstelegramm DM	311
10	5D2		N	N	Y	20.0			IEC 870-5-101	Meldungstelegramm DM	311
11	5D3	N		N	N		Alarm 1 (Hupenbefehl)	KVIT 8TK			
13	8FA		N	N	Y	20.0			IEC 870-5-101	Meldungstelegramm DM	314
14	7F1		N	N	Y	20.0			IEC 870-5-101	Meldungstelegramm DM	314
15	7F2			N	N		Alarm 1 (Hupenbefehl)	KVIT 8TK			
16	7F3	N		N	N		Alarm 1 (Hupenbefehl)				
17	7F4	N		N	N		Alarm 1 (Hupenbefehl)				
18	6F1	N		N	N		Alarm 1 (Hupenbefehl)	KVIT 8TK			
19	6F3	N		N	N		Alarm 1 (Hupenbefehl)	KVIT 8TK			
20	6F4	N		N	N		Alarm 1 (Hupenbefehl)				
21	5F1	N		N	N		Alarm 1 (Hupenbefehl)				
22	5F2			N	N		Alarm 1 (Hupenbefehl)				
23	5F3	N		N	N		Alarm 1 (Hupenbefehl)				

Documentation structur: Standard
Source file: KO050722.ODA

Date 22.07.2005
Drawn LANG
Appr.
Remarks | Date | Name Norm

VSZ KOSICE
Orig./Repl. 1/Repl. by

SIEMENS AG
ISAIOOLS

Substation control system 6MB
Compact I/O unit:
Indications
Table

T = /BG 13
+
-S106
Page 3

Proprietary data, company confidential. All rights reseved
Confia a litre de secret d'entreprise. Tous droits reservs.
Comunicado como segredo empresarial. Reservados todos os direitos.
Confiado como secreto industrial. Nos reservamos todos los derechos.

The reproduction, transmission or use of this document or its is not permitted without expres written authority.
Offenders will be liable for damages. All rights, including rights created by patent grant or registration of a utility model or design, are reseved

Station: UW KOSICE
Device: EA02 EAG
Device type: 6MB5220-1
Packet numbe 8
Version no.: 1

Connection:
Device: LZG
Subrack: LZG-BGT
Module: AST 1
UART: 2
MUX: 2

General definitions:

Rated auxiliary voltage:	60 V, 110 V, 125 V DC
LZG monitoring:	Indication
Ext. met. value tr. comm.:	No
LIVE contact:	No
Buffer type:	I/O unit normal
Timeout monitoring:	Yes

Scan cycle for ind. input:

Scan cycle for fault ind.:	10
Scan number 02:	10
Scan cycle for pos. ind.:	100
Scan number 03:	3
Scan cycle for op. ind.:	1000
Scan number 04:	1

Specifications for chatter dis

Analog interval in s:
Blockage time in s:
Number of test cycle
Number of block. cyc

Input	Connect designation	Section	Bay	Logical device	Lower limit	Value text	Column section	Column bay	Column logical device	Column information	Column value text	With command	Indication type	Entry in event list	Entry in alarm list	Acknowledge	Display in indication area	Indication class	Entry in SML	Display in diagram	Display of intermed. pos.	Acknowledge	Display under voltage level	Indication class	Archive	Operational indications	Protection indications
1	8D4	R110	EA02	ODPOJOVAC Q2	SCHALTZUSTAND	vyp.	22	27	39	0	75	LZM	DI	O					N	Y	N	O	Y	2	R	Y	N
2	7D1	R110	EA02	ODPOJOVAC Q2	SCHALTZUSTAND	zap.	22	27	39	0	75	LZM	DI	O					N	Y	N	O	Y	2	R	Y	N
3	7D2	R110	EA02	ODPOJOVAC Q7	SCHALTZUSTAND	vyp.	22	27	39	0	75	LZM	DI	O					N	Y	N	O	Y	2	R	Y	N
4	7D3	R110	EA02	ODPOJOVAC Q7	SCHALTZUSTAND	zap.	22	27	39	0	75	LZM	DI	O					N	Y	N	O	Y	2	R	Y	N
5	7D4	R110	EA02	VYPINAC Q0	SCHALTZUSTAND	vyp.	22	27	39	0	75	LZM	DI	O					N	Y	N	O	Y	2	R	Y	N
6	6D1	R110	EA02	VYPINAC Q0	SCHALTZUSTAND	zap.	22	27	39	0	75	LZM	DI	O					N	Y	N	O	Y	2	R	Y	N
7	6D3	R110	EA02	ODPOJOVAC Q9	SCHALTZUSTAND	vyp.	22	27	39	0	75	LZM	DI	O					N	Y	N	O	Y	2	R	Y	N
8	6D4	R110	EA02	ODPOJOVAC Q9	SCHALTZUSTAND	zap.	22	27	39	0	75	LZM	DI	O					N	Y	N	O	Y	2	R	Y	N
9	5D1	R110	EA02	ODPOJOVAC Q1	SCHALTZUSTAND	vyp.	22	27	39	0	75	LZM	DI	O					N	Y	N	O	Y	2	R	Y	N
10	5D2	R110	EA02	ODPOJOVAC Q1	SCHALTZUSTAND	zap.	22	27	39	0	75	LZM	DI	O					N	Y	N	O	Y	2	R	Y	N
11	5D3	R110	EA02		8TK PORUCHA	KON ZAC	22	27	0	39	75	PV	SI	R/C	Y	R/C	Y	1	N	N					R/C	Y	N
13	8FA	R110	EA02	ODPOJOVAC ZEMNIACI Q8	SCHALTZUSTAND	vyp.	22	27	39	0	75	LZM	DI	O					N	Y	N	O	Y	2	R	Y	N
14	7F1	R110	EA02	ODPOJOVAC ZEMNIACI Q8	SCHALTZUSTAND	zap.	22	27	39	0	75	LZM	DI	O					N	Y	N	O	Y	2	R	Y	N
15	7F2	R110	EA02		VYPN.VYPINAC.BEZ POVELU	KON ZAC	22	27	0	39	75	PV	TR	O	Y	O	Y	1	N	N					R	Y	N
16	7F3	R110	EA02		PREVADZKA S1	KON ZAC	22	27	0	39	75	PV	SI	R/C	Y	R/C	Y	1	N	Y		N	N		R/C	Y	N
17	7F4	R110	EA02		S5 POLOHA VYPN./MIESTNE	KON ZAC	22	27	0	39	75	PV	SI	R/C	Y	R/C	Y	1	N	Y		N	N		R/C	Y	N
18	6F1	R110	EA02		CHYBA OBSLUHY	KON ZAC	22	27	0	39	75	PV	SI	R/C	N				N	N					R/C	Y	N
19	6F3	R110	EA02		PREKROCENIE CASU BEHU	KON ZAC	22	27	0	39	75	PV	SI	R/C	N				N	N					R/C	Y	N
20	6F4	R110	EA02		PORUCHA VYPINACA	KON ZAC	22	27	0	39	75	PV	SI	R/C	Y	R/C	Y	1	N	N					R/C	N	Y
21	5F1	R110	EA02		STRATA js./st. NAPATI	KON ZAC	22	27	0	39	75	PV	SI	R/C	Y	R/C	Y	1	N	N					R/C	N	Y
22	5F2	R110	EA02		RUCNE VYPN. VYPINACA	KON ZAC	22	27	0	39	75	PV	TR	O	Y	O	Y	1	N	N					R	N	Y
23	5F3	R110	EA02		PORUCHA TRANSF.	KON ZAC	22	27	0	39	75	PV	SI	R/C	Y	R/C	Y	1	N	N					R/C	N	Y

Documentation structur: Standard
Source file: KO050722.ODA

Date	22.07.2005	VSZ KOSICE	SIEMENS AG ISAIOOLS
Drawn	LANG		
Appr.			
Norm			

Substation control system 6MB
Compact I/O unit:
Indications
Table

T = /BG 12
+
-S106
Page 12

Rev.	Remarks	Date	Name	Orig./Repl. 1/Repl. by

Station:
Device: EA01 EAG/2
Device type: 6MB5220-1

Analog channel no.	Connect designation	Teletrans. FP raw val. Master station	Name of telegram	Name of info element
1	1C1/1C2			
2	2E1/2E2			
3	1E1/1E2			
4	1D1/1D2	IEC 870-5-101	Meßwerttelegramm	705
5	1D3/1D4	IEC 870-5-101	Meßwerttelegramm	706
6	1F1/1F2	IEC 870-5-101	Meßwerttelegramm	707
7	5C1/5C2	IEC 870-5-101	Meßwerttelegramm	708
8	5C3/5C4			

Proprietary data, company confidential. All rights reserved.
Confie a titre de secret d'entreprise. Tous droits r,serv,s.
Comunicado como segredo empresarial. Reservados todos os direitos.
Confiado como secreto industrial. Nos reservamos todos los derechos.
The reproduction, transmission or use of this document or its is not permitted without express written authority.
Offenders will be liable for damages. All rights, including rights created by patent grant or registration of a utility model or design, are reserved

Documentation structur: Standard
Source file: KO050722.ODA

			Date	22.07.2005	VSZ KOSICE	SIEMENS AG ISA TOOLS	Substation control system 6MB
			Drawn	LANG			Compact I/O unit:
			Appr.				Analog values
Remarks	Date	Name	Norm		Orig./Repl. 1/Repl. by		Table

T = /BG 11
+
-S106
Page 11

Proprietary data, company confidential. All rights reserved.
Confia a ltre de secret d'entreprise. Tous droits réservés.
Comunicado como segredo empresarial. Reservados todos os direitos.
Confiado como secreto industrial. Nos reservamos todos los derechos.

The reproduction, transmission or use of this document or its contents is not permitted without express written authority. Offenders will be liable for damages. All rights, including rights created by patent grant or registration of a utility model or design, are reserved.

Station:
Device: EA01 EAG/2
Device type: 6MB5220-1

Analog channel no.	Connect designation	Archive	Analog recording	Recording mode	No. of val. to be averaged	Scan interval in s	Analog value type	Max. value of analog value	Keep non-return pointer	Calculated demand value	Derive percentage value	Derive metered value	Static limit monitoring: Filtering time in s	Lower limit 1	Indication at lower limit 1	Lower limit 2	Indication at lower limit 2	Upper limit 1	Indication at higher limit 1	Upper limit 2	Indication at higher limit 2
1	1C1/1C2											PV									
2	2E1/2E2											PV									
3	1E1/1E2											PV									
4	1D1/1D2	Y	PERM	Analog value direct		900	PPV	132.00	PV	PV	PV	PV	0	99.00	NAPATIE L1-L2 DH1			121.00	NAPATIE L1-L2 HH1		
5	1D3/1D4	Y	PERM	Analog value direct		900	PPV	132.00	PV	PV	PV	PV	0	99.00	NAPATIE L1-L3 DH1			121.00	NAPATIE L1-L3 HH1		
6	1F1/1F2	Y	PERM	Analog value direct		900	PPV	132.00	PV	PV	PV	PV	0	99.00	NAPATIE L2-L3 DH1			121.00	NAPATIE L2-L3 HH1		
7	5C1/5C2	Y	PERM	Analog value direct		900	F	66.00	PV	PV	PV	PV									
8	5C3/5C4											PV									

Documentation structur: Standard
Source file: KO050722.ODA

Rev.	Remarks	Date	Name	Norm	Date 22.07.2005	Drawn LANG	Appr.	Orig./Repl. 1/Repl. by

VSZ KOSICE

SIEMENS AG
ISAOOLS

Substation control system 6MB
Compact I/O unit:
Analog values
Table

T = /BG 10
+
-S106
Page 10

Station:
Device: EA01 EAG/2
Device type: 6MB5220-1

Analog channel no.	Connect designation	Section	Bay	Logical device	Lower limit	Display value	Dimension	Zero suppression f. display in %	Text for display	Bay blockage	Zero suppression on acq. in %	Thres val. for switchover in %	Process analog value in I/O uni	Knee point: Acquisition value in mA	Knee point: Display value	With live-zero monitoring	Display in diagram
1	1C1/1C2															PV	
2	2E1/2E2															PV	
3	1E1/1E2															PV	
4	1D1/1D2	R110	EA01	MESSW. SPANNUNG W2	NAPATIE L1-L2	110.00	KV	5.0	NAPATIE L1-L2	N		0.0	N			PV	Y
5	1D3/1D4	R110	EA01	MESSW. SPANNUNG W2	NAPATIE L1-L3	110.00	KV	5.0	NAPATIE L1-L3	N		0.0	N			PV	Y
6	1F1/1F2	R110	EA01	MESSW. SPANNUNG W2	NAPATIE L2-L3	110.00	KV	5.0	NAPATIE L2-L3	N		0.0	N			PV	Y
7	5C1/5C2	R110	EA01		FREKVENCIA W2	55.00	Hz	PV	FREKVENCIA W2	N	5.0	0.0	N	0.00	45.00	PV	Y
8	5C3/5C4															PV	

Proprietary data, company confidential. All rights reserved.
Confie a titre de secret d'entreprise. Tous droits r,serv,s.
Comunicado como segredo empresarial. Reservados todos os direitos.
Confiado como secreto industrial. Nos reservamos todos los derechos.
The reproduction, transmission or use of this document or its is not permitted without expres written authority.
Offenders will be liable for damages. All rights, including rights created by patent grant or registration of a utility model or design, are reserved

Documentation structur: Standard
Source file: KO050722.ODA

Remarks	Date	Name	Norm	Date	22.07.2005	VSZ KOSICE	SIEMENS AG ISA OOLS	Substation control system 6MB Compact I/O unit: Analog values Table	T = /BG 9 + -S106	Page 9
				Drawn	LANG					
				Appr.						
				Orig./Repl. 1/Repl. by						

Proprietary data, company confidential. All rights reserved.
Confie a titre de secret d'entreprise. Tous droits réservés.
Comunicado como segredo empresarial. Reservados todos os direitos.
Confiado como secreto industrial. Nos reservamos todos los derechos.

The reproduction, transmission or use of this document or its is not permitted without express written authority. Offenders will be liable for damages. All rights, including rights created by patent grant or registration of a utility model or design, are reserved

Documentation structur: Standard
Source file: KO050722.ODA

Station:
Device: EA01 EAG/2
Device type: 6MB5220-1

Output	Connect designation	Section	Bay	Logical device	Lower limit	Value text	Type of command	Entry in event list	Entry in SML	Display in diag. as select. field	Archive
1	3C1/3C2									PV	
2	3C3/3C4									PV	
3	4C1/4C2									PV	
4	4C3/4C4									PV	
5	4D1/4D2									PV	
6	4D3/4D4									PV	
7	2D1/2D2									PV	
9	3E1/3E2									PV	
10	3E3/3E4									PV	
11	4E1/4E2									PV	
12	4E3/4E4									PV	
13	4F1/4F2									PV	
14	4F3/4F4									PV	
15	2F1/2F2									PV	

Rev.	Remarks	Date	Name	Date	22.07.2005
				Drawn	LANG
				Appr.	
				Norm	

VSZ
KOSICE

Orig./Repl. 1/Repl. by

SIEMENS AG
ISAOOLS

Substation control system 6MB
Compact I/O unit:
Commands
Table

T = /BG 8
+
-S106
Page 8

Station:

Device: EA01 EAG/2
Device type: 6MB5220-1
Packet numbe 8
Version no.: 1

Connection:

Device: EA01 EAG/1
Subrack:
Module:
UART: 2
MUX:

General definitions:

Rated auxiliary voltage: 60 V, 110 V, 125 V DC
LZG monitoring: Switchover
Ext. met. value tr. comm.: No
LIVE contact: No
Buffer type: I/O unit in 7XP20 housing
Timeout monitoring: Yes

Scan cycle for ind. input:

Scan cycle for fault ind.: 10
Scan number 02: 10
Scan cycle for pos. ind.: 100
Scan number 03: 3
Scan cycle for op. ind.: 1000
Scan number 04: 1

Specifications for chatter dis

Analog interval in s: 0
Blockage time in s: 0
Number of test cycle
Number of block. cyc

Input	Connect designation	Section	Bay	Logical device	Lower limit	Value text	Entry in event list	Entry in SML	Display in diagram	Archive	Monitored as feedback
1	8D4										
2	7D1										
3	7D2										
4	7D3										
5	7D4										
6	6D1										
7	6D3										
8	6D4										
9	5D2										
10	5D1										
11	5D3										
13	8F4										
14	7F1										
15	7F2										
16	7F3										
17	7F4										
18	6F1										
19	6F3										
20	6F4										
21	5F1										
22	5F2										
23	5F3										

Proprietary data, company confidential. All rights reserved
Confia a tire de secret dentreprise. Tous droits reservs
Comunicado como segredo empresarial. Reservados todos os direitos.
Confiado como secreto industrial. Nos reservamos todos los derechos
The reproduction, transmission or use of this document or its
is not permitted without expres written authority.
Offenders will be liable for damages. All rights, including rights
created by patent grant or registration of a utility model or design, are reserved

Documentation structur: Standard
Source file: KO050722.ODA

Date	22.07.2005	VSZ KOSICE	SIEMENS AG ISATOOLS	Substation control system 6MB	T = /BG 7
Drawn	LANG			Compact I/O unit:	+
Appr.				Indications	-S106 Page 7
Remarks	Date	Name Norm	Orig./Repl. 1/Repl. by	Table	

Station: UW KOSICE
Device: EA01 EAG/1
Device type: 6MB5220-1

Analog channel no.	Connect designation	Teletrans. FP raw val. Master station	Name of telegram	Name of info element
1	STROM L2			
2	STROM L1			
3	STROM L3			
4	UL1-UL2	IEC 870-5-101	Meßwerttelegramm	700
5	UL1-UL3	IEC 870-5-101	Meßwerttelegramm	701
6	UL2-UL3	IEC 870-5-101	Meßwerttelegramm	702
7	W-LEISTUNG	IEC 870-5-101	Meßwerttelegramm	703
8	B-LEISTUNG			

Proprietary data, company confidential. All rights reserved.
Confie a titre de secret d'entreprise. Tous droits réservés.
Comunicado como segredo empresarial. Reservados todos os direitos.
Confiado como secreto industrial. Nos reservamos todos los derechos.
The reproduction, transmission or use of this document or its is not permitted without express written authority.
Offenders will be liable for damages. All rights, including rights created by patent grant or registration of a utility model or design, are reserved.

Documentation structur: Standard
Source file: KO050722.ODA

Rev.	Remarks	Date	Name	Date	22.07.2005	VSZ KOSICE	SIEMENS AG ISA TOOLS	Substation control system 6MB Compact I/O unit: Analog values Table	T = /BG 6 + -S106 Page 6
				Drawn	LANG				
				Appr.					
				Norm		Orig./Repl. 1/Repl. by			

Proprietary data, company confidential. All rights reserved
Confi a ltre de secret d'entreprise. Tous droits r.serv.s.
Comunicado como segredo empresarial. Reservados todos os direitos.
Comiado como secreto industrial. Nos reservamos todos los derechos.
The reproduction, transmission or use of this document or its
is not permitted without expres written authority.
Offenders will be liable for damages. All rights, including rights
created by patent gant or registration of a utility model or design, are reserved

Station: UW KOSICE
Device: EA03 EAG
Device type: 6MB5220-1
Packet numbe 8
Version no.: 1

Connection:
Device: LZG
Subrack: LZG-BGT
Module: AST 1
UART: 2
MUX: 3

General definitions:
Rated auxiliary voltage: 60 V, 110 V, 125 V DC
LZG monitoring: Indication
Ext. met. value tr. comm.: No
LIVE contact: No
Buffer type: I/O unit normal
Timeout monitoring: Yes

Scan cycle for ind. input:
Scan cycle for fault ind.: 10
Scan number 02: 10
Scan cycle for pos. ind.: 100
Scan number 03: 3
Scan cycle for op. ind.: 1000
Scan number 04: 1

Specifications for chatter dis
Analog interval in s:
Blockage time in s:
Number of test cycle
Number of block. cyc

Input	Connect designation	Section	Bay	Logical device	Lower limit	Value text		Column section	Column bay	Column logical device	Column information	Column value text	With command	Indication type	Entry in event list	Entry in alarm list	Acknowledge	Display in indication area	Indication class	Entry in SML	Display in diagram	Display of intermed. pos.	Acknowledge	Display under voltage level	Indication class	Archive	Operational indications	Protection indications	Filt. of raised & cleared	Filtering of intermed. pos.	Bay blockage
1	8D4	R110	EA03	ODPOJOVAC Q2	SCHALTZUSTAND	vyp.		22	27	39	0	75	LZM	DI	O					N	Y	N	O	Y	2	R	Y	N		N	N
2	7D1	R110	EA03	ODPOJOVAC Q2	SCHALTZUSTAND	zap.		22	27	39	0	75	LZM	DI	O					N	Y	N	O	Y	2	R	Y	N		N	N
3	7D2	R110	EA03	ODPOJOVAC Q7	SCHALTZUSTAND	vyp.		22	27	39	0	75	LZM	DI	O					N	Y	N	O	Y	2	R	Y	N		N	N
4	7D3	R110	EA03	ODPOJOVAC Q7	SCHALTZUSTAND	zap.		22	27	39	0	75	LZM	DI	O					N	Y	N	O	Y	2	R	Y	N		N	N
5	7D4																														
6	6D1																														
7	6D3	R110	EA03	ODPOJOVAC Q9	SCHALTZUSTAND	vyp.		22	27	39	0	75	LZM	DI	O					N	Y	N	O	Y	2	R	Y	N		N	N
8	6D4	R110	EA03	ODPOJOVAC Q9	SCHALTZUSTAND	zap.		22	27	39	0	75	LZM	DI	O					N	Y	N	O	Y	2	R	Y	N		N	N
9	5D1	R110	EA03	ODPOJOVAC Q1	SCHALTZUSTAND	vyp.		22	27	39	0	75	LZM	DI	O					N	Y	N	O	Y	2	R	Y	N		N	N
10	5D2	R110	EA03	ODPOJOVAC Q1	SCHALTZUSTAND	zap.		22	27	39	0	75	LZM	DI	O					N	Y	N	O	Y	2	R	Y	N		N	N
11	5D3																														
13	8FA																														
14	7F1	R110	EA03		8TK PORUCHA	KON	ZAC	22	27	0	39	75	PV	SI	R/C	Y	R/C	Y	1	N	N					R/C	Y	N	N		N
15	7F2	R110	EA03		VYPN.VYPINAC.BEZ POVELU	KON	ZAC	22	27	0	39	75	PV	TR	O	Y	O	Y	1	N	N					R	Y	N			N
16	7F3	R110	EA03		PREVADZKA S1	KON	ZAC	22	27	0	39	75	PV	SI	R/C	Y	R/C	Y	1	N	Y		N	N		R/C	Y	N	N		N
17	7F4	R110	EA03		S5 POLOHA VYPN./MIESTNE	KON	ZAC	22	27	0	39	75	PV	SI	R/C	Y	R/C	Y	1	N	Y		N	N		R/C	Y	N	N		N
18	6F1	R110	EA03		CHYBA OBSLUHY	KON	ZAC	22	27	0	39	75	PV	SI	R/C	N				N	N					R/C	Y	N	N		N
19	6F3	R110	EA03		PREKROCENIE CASU BEHU	KON	ZAC	22	27	0	39	75	PV	SI	R/C	N				N	N					R/C	Y	N	N		N
20	6F4	R110	EA03		PORUCHA VYPINACA	KON	ZAC	22	27	0	39	75	PV	SI	R/C	Y	R/C	Y	1	N	N					R/C	N	Y	N		N
21	5F1	R110	EA03		STRATA js./st. NAPATI	KON	ZAC	22	27	0	39	75	PV	SI	R/C	Y	R/C	Y	1	N	N					R/C	N	Y	N		N
22	5F2	R110	EA03		PORUCHA FREKVENC.OCHR.	KON	ZAC	22	27	0	39	75	PV	SI	R/C	Y	R/C	Y	1	N	N					R/C	N	Y	N		N
23	5F3	R110	EA03		POSOB. FREKVENC.OCHR.	KON	ZAC	22	27	0	39	75	PV	TR	O	Y	O	Y	1	N	N					R	N	Y			N

Documentation structur: Standard
Source file: KO050722.ODA

			Date	22.07.2005	VSZ KOSICE	SIEMENS AG ISAOOLS
			Drawn	LANG		
			Appr.			
Rev.	Remarks	Date	Name	Norm	Orig./Repl. 1/Repl. by	

Substation control system 6MB
Compact I/O unit:
Indications
Table

T = /BG 18
+
-S106
Page 18

Station: UW KOSICE
Device: EA03 EAG
Device type: 6MB5220-1
Packet numbe 8
Version no.: 1

Connection:
Device: LZG
Subrack: LZG-BGT
Module: AST 1
UART: 2
MUX: 3

General definitions:
Rated auxiliary voltage: 60 V, 110 V, 125 V DC
LZG monitoring: Indication
Ext. met. value tr. comm.: No
LIVE contact: No
Buffer type: I/O unit normal
Timeout monitoring: Yes

Scan cycle for ind. input:
Scan cycle for fault ind.: 10
Scan number 02: 10
Scan cycle for pos. ind.: 100
Scan number 03: 3
Scan cycle for op. ind.: 1000
Scan number 04: 1

Specifications for chatter dis
Analog interval in s:
Blockage time in s:
Number of test cycle
Number of block. cyc

Input	Connect designation	Monitored as feedback	Checkback monit. time in s	Command derivation	Indication derivation	Remote transmission FP: Master station	Name of telegram	Name of info element
1	8D4	Y	20.0			IEC 870-5-101	Meldungstelegramm DM	322
2	7D1	Y	20.0			IEC 870-5-101	Meldungstelegramm DM	322
3	7D2	Y	20.0			IEC 870-5-101	Meldungstelegramm DM	323
4	7D3	Y	20.0			IEC 870-5-101	Meldungstelegramm DM	323
5	7D4							
6	6D1							
7	6D3	Y	20.0			IEC 870-5-101	Meldungstelegramm DM	325
8	6D4	Y	20.0			IEC 870-5-101	Meldungstelegramm DM	325
9	5D1	Y	20.0			IEC 870-5-101	Meldungstelegramm DM	321
10	5D2	Y	20.0			IEC 870-5-101	Meldungstelegramm DM	321
11	5D3							
13	8FA							
14	7F1	N		Alarm 1 (Hupenbefehl)	KVIT 8TK			
15	7F2	N		Alarm 1 (Hupenbefehl)	KVIT 8TK			
16	7F3	N		Alarm 1 (Hupenbefehl)				
17	7F4	N		Alarm 1 (Hupenbefehl)				
18	6F1	N		Alarm 1 (Hupenbefehl)	KVIT 8TK			
19	6F3	N		Alarm 1 (Hupenbefehl)	KVIT 8TK			
20	6F4	N		Alarm 1 (Hupenbefehl)				
21	5F1	N		Alarm 1 (Hupenbefehl)				
22	5F2	N		Alarm 1 (Hupenbefehl)				
23	5F3	N		Alarm 1 (Hupenbefehl)				

Proprietary data, company confidential. All rights reserved.
Confie a tire de secret d'entreprise. Tous droits r,serv,s.
Comunicado como segredo empresarial. Reservados todos os direitos.
Confiado como secreto industrial. Nos reservamos todos los derechos.
The reproduction, transmission or use of this document or its is not permitted without express written authority.
Offenders will be liable for damages. All rights, including rights created by patent grant or registration of a utility model or design, are reserved

Documentation structur: Standard
Source file: KO050722.ODA

Remarks	Date	Name	Date	22.07.2005	VSZ KOSICE	SIEMENS AG ISAOOLS	Substation control system 6MB
			Drawn	LANG			Compact I/O unit:
			Appr.				Indications
			Norm		Orig./Repl. 1/Repl. by		Table

T = /BG 19
+
-S106
Page 19

Station: UW KOSICE
Device: EA03 EAG
Device type: 6MB5220-1

Output	Connect designation	Section	Bay	Logical device	Lower limit	Value text		Column section	Column bay	Column logical device	Column information	Column value text	Type of command	Entry in event list	Entry in alarm list	Entry in SML	Display in diag. as select. field	Archive	Operational indications	SW termination time in s	Checkback monit. time in s	Interlocking type:	
1	3C1/3C2	R110	EA03	ODPOJOVAC Q2	SCHALTZUSTAND	8D4	vyp.	22	27	39	0	75	DC	O		N	PV	R	Y	0.6	20.0	SCHALTGERÄT	
2	3C3/3C4	R110	EA03	ODPOJOVAC Q2	SCHALTZUSTAND	8D4	zap.	22	27	39	0	75	DC	O		N	PV	R	Y	0.6	20.0	SCHALTGERÄT	
3	4C1/4C2	R110	EA03	ODPOJOVAC Q7	SCHALTZUSTAND	7D2	vyp.	22	27	39	0	75	DC	O		N	PV	R	Y	0.6	20.0	SCHALTGERÄT	
4	4C3/4C4	R110	EA03	ODPOJOVAC Q7	SCHALTZUSTAND	7D2	zap.	22	27	39	0	75	DC	O		N	PV	R	Y	0.6	20.0	SCHALTGERÄT	
5	4D1/4D2																PV						
6	4D3/4D4																PV						
7	2D1/2D2	R110	EA03		KVITOVANIE	KON	ZAC	22	27	0	39	75	SC	O	N	N	PV	R	N	0.6		SCHALTGERÄT	
9	3E1/3E2	R110	EA03	ODPOJOVAC Q9	SCHALTZUSTAND	6D3	vyp.	22	27	39	0	75	DC	O		N	PV	R	Y	0.6	20.0	SCHALTGERÄT	
10	3E3/3E4	R110	EA03	ODPOJOVAC Q9	SCHALTZUSTAND	6D3	zap.	22	27	39	0	75	DC	O		N	PV	R	Y	0.6	20.0	SCHALTGERÄT	
11	4E1/4E2	R110	EA03	ODPOJOVAC Q1	SCHALTZUSTAND	5D1	vyp.	22	27	39	0	75	DC	O		N	PV	R	Y	0.6	20.0	SCHALTGERÄT	
12	4E3/4E4	R110	EA03	ODPOJOVAC Q1	SCHALTZUSTAND	5D1	zap.	22	27	39	0	75	DC	O		N	PV	R	Y	0.6	20.0	SCHALTGERÄT	
13	4F1/4F2																PV						
14	4F3/4F4																PV						
15	2F1/2F2	R110	EA03		DEBLOKACIA BLOKOVANIA	KON	ZAC	22	27	0	39	75	SC	R/C	N	N	PV	R/C	Y			SCHALTGERÄT	

Proprietary data, company confidential. All rights reserved.
Confie a titre de secret d'entreprise. Tous droits réservés.
Comunicado como segredo empresarial. Reservados todos os direitos.
Confiado como secreto industrial. Nos reservamos todos los derechos.

The reproduction, transmission or use of this document or its contents is not permitted without express written authority. Offenders will be liable for damages. All rights, including rights created by patent grant or registration of a utility model or design, are reserved.

Documentation structur: Standard
Source file: KO050722.ODA

Rev.	Remarks	Date	Name	Norm	Date	22.07.2005	VSZ KOSICE	SIEMENS AG ISATOOLS	Substation control system 6MB Compact I/O unit: Commands Table	T = /BG 20 +	Page 20
					Drawn	LANG				-S106	
					Appr.						
					Orig./Repl. 1/Repl. by						

Station: UW KOSICE
Device: EA03 EAG
Device type: 6MB5220-1

Analog channel no.	Connect designation	Section	Bay	Logical device	Lower limit	Display value	Dimension	Zero suppression f. display in %	Text for display	Bay blockage	Thres val. for switchover in %	Process analog value in I/O uni	With live-zero monitoring	Display in diagram
1	STROM L2	R110	EA03	MESSWERTE STROM	PRUD L2	1000.00	A	1.0	PRUD L2	N	0.0	N	PV	Y
2	STROM L1	R110	EA03	MESSWERTE STROM	PRUD L1	1000.00	A	1.0	PRUD L1	N	0.0	N	PV	N
3	STROM L3	R110	EA03	MESSWERTE STROM	PRUD L3	1000.00	A	1.0	PRUD L3	N	0.0	N	PV	N
4	UL1-UL2	R110	EA03	MESSWERTE SPANNUNG	NAPATIE L1	63.50	KV	10.0	NAPATIE L1	N	0.0	N	PV	Y
5	UL1-UL3												PV	
6	UL2-UL3												PV	
7	W-LEISTUNG	R110	EA03		VYKON CINNY	190.52	MW	1.0	VYKON CINNY	N	0.0	N	PV	Y
8	B-LEISTUNG	R110	EA03		VYKON JALOVY	190.52	MVar	1.0	VYKON JALOVY	N	0.0	N	PV	Y

Proprietary data, company confidential. All rights reserved.
Confie a titre de secret d'entreprise. Tous droits reservs.
Comunicado como segredo empresarial. Reservados todos os direitos.
Confiado como secreto industrial. Nos reservamos todos los derechos.

The reproduction, transmission or use of this document or its is not permitted without express written authority.
Offenders will be liable for damages. All rights, including rights created by patent grant or registration of a utility model or design, are reserved

Documentation structur: Standard
Source file: KO050722.ODA

			Date	22.07.2005	VSZ KOSICE	SIEMENS AG ISAOOLS	Substation control system 6MB
			Drawn	LANG			Compact I/O unit:
			Appr.				Analog values
F	Remarks	Date	Name	Norm	Orig./Repl. 1/Repl. by		Table

T = /BG 21
+
-S106
Page

Station: UW KOSICE
Device: EA03 EAG
Device type: 6MB5220-1

Analog channel no.	Connect designation	Archive	Analog recording	Recording mode	No. of val. to be averaged	Scan interval in s	Analog value type	Max. value of analog value	Keep non-return pointer	Calculated demand value	Derive percentage value	Derive metered value	Static limit monitoring: Filtering time in s	Lower limit 1	Indication at lower limit 1	Lower limit 2	Indication at lower limit 2	Upper limit 1	Indication at higher limit 1	Upper limit 2	Indication at higher limit 2
1	STROM L2	Y	PERM	Analog value direct		900	CUR	1200.00	PV	PV	PV	PV	0					1199.90	PRUD L2 HH1		
2	STROM L1	Y	PERM	Analog value direct		900	CUR	1200.00	PV	PV	PV	PV	0					1199.90	PRUD L1 HH1		
3	STROM L3	Y	PERM	Analog value direct		900	CUR	1200.00	PV	PV	PV	PV	0					1199.90	PRUD L3 HH1		
4	UL1-UL2	Y	PERM	Analog value direct		900	PV	76.21	PV	PV	PV	PV	0	57.15	NAPATIE L1 DH1			69.85	NAPATIE L1 HH1		
5	UL1-UL3											PV									
6	UL2-UL3											PV									
7	W-LEISTUNG	Y	PERM	Analog value direct		900	AP	228.63	PV	PV	PV	PV									
8	B-LEISTUNG	Y	PERM	Analog value direct		900	RP	228.63	PV	PV	PV	PV									

Proprietary data, company confidential. All rights reserved.
Confie a titre de secret d'entreprise. Tous droits r,serv,s.
Comunicado como segredo empresarial. Reservados todos os direitos.
Confiado como secreto industrial. Nos reservamos todos los derechos.
The reproduction, transmission or use of this document or its is not permitted without express written authority.
Offenders will be liable for damages. All rights, including rights created by patent grant or registration of a utility model or design, are reserved

Documentation structur: Standard
Source file: KO050722.ODA

Rev.	Remarks	Date	Name	Date	22.07.2005
				Drawn	LANG
				Appr.	
				Norm	

VSZ
KOSICE

Orig./Repl. 1/Repl. by

SIEMENS AG
ISA TOOLS

Substation control system 6MB
Compact I/O unit:
Analog values
Table

T = /BG 22
+
-S106
Page 22

Station: UW KOSICE
Device: EA03 EAG
Device type: 6MB5220-1

Analog channel no.	Connect designation	Teletrans. FP raw val. Master station	Name of telegram	Name of info element
1	STROM L2	IEC 870-5-101	Meßwerttelegramm	720
2	STROM L1	IEC 870-5-101	Meßwerttelegramm	721
3	STROM L3	IEC 870-5-101	Meßwerttelegramm	722
4	UL1-UL2	IEC 870-5-101	Meßwerttelegramm	723
5	UL1-UL3			
6	UL2-UL3			
7	W-LEISTUNG	IEC 870-5-101	Meßwerttelegramm	724
8	B-LEISTUNG	IEC 870-5-101	Meßwerttelegramm	725

Proprietary data, company confidential. All rights reserved.
Confie a titre de secret d'entreprise. Tous droits réservés.
Comunicado como segredo empresarial. Reservados todos os direitos.
Confiado como secreto industrial. Nos reservamos todos los derechos.

The reproduction, transmission or use of this document or its is not permitted without express written authority. Offenders will be liable for damages. All rights, including rights created by patent grant or registration of a utility model or design, are reserved

Documentation structur: Standard
Source file: KO050722.ODA

Remarks	Date	Name	Date	22.07.2005	VSZ KOSICE	SIEMENS AG ISA TOOLS	Substation control system 6MB Compact I/O unit: Analog values Table	T = /BG 23 + -S106 Page 23
			Drawn	LANG				
			Appr.					
			Norm		Orig./Repl. 1/Repl. by			

Proprietary data, company confidential. All rights reserved.
Confe a tifre de secret dentreprise. Tous droits r.servis.
Comunicado como segredo empresarial. Reservados todos os direitos.
Contado como secreto industrial. Nos reservamos todos los derechos.
The reproduction, transmission or use of this document or its contents is not permitted without expres written authority. Offenders will be liable for damages. All rights, including rights created by patent grant or registration of a utility model or design, are reserved.

Station: UW KOSICE
Device: EA04 EAG
Device type: 6MB5220-1
Packet numbe 8
Version no.: 1

Connection:
Device: LZG
Subrack: LZG-BGT
Module: AST 1
UART: 2
MUX: 4

General definitions:

Rated auxiliary voltage: 60 V, 110 V, 125 V DC
LZG monitoring: Indication
Ext. met. value tr. comm.: No
LIVE contact: No
Buffer type: I/O unit normal
Timeout monitoring: Yes

Scan cycle for ind. input:

Scan cycle for fault ind.: 10
Scan number 02: 10
Scan cycle for pos. ind.: 100
Scan number 03: 3
Scan cycle for op. ind.: 1000
Scan number 04: 1

Specifications for chatter dis

Analog interval in s:
Blockage time in s:
Number of test cycle
Number of block. cyc

Input	Connect designation	Section	Bay	Logical device	Lower limit	Value text	Column section	Column bay	Column logical device	Column information	Column value text	With command	Indication type	Entry in event list	Entry in alarm list	Acknowledge	Display in indication area	Indication class	Entry in SML	Display in diagram	Display of intermed. pos.	Acknowledge	Display under voltage level	Indication class	Archive	Operational indications	Protection indications
1	8D4	R110	EA04	ODPOJOVAC Q2	SCHALTZUSTAND	vyp.	22	27	39	0	75	LZM	DI	O					N	Y	N	O	Y	2	R	Y	N
2	7D1	R110	EA04	ODPOJOVAC Q2	SCHALTZUSTAND	zap.	22	27	39	0	75	LZM	DI	O					N	Y	N	O	Y	2	R	Y	N
3	7D2	R110	EA04	ODPOJOVAC Q7	SCHALTZUSTAND	vyp.	22	27	39	0	75	LZM	DI	O					N	Y	N	O	Y	2	R	Y	N
4	7D3	R110	EA04	ODPOJOVAC Q7	SCHALTZUSTAND	zap.	22	27	39	0	75	LZM	DI	O					N	Y	N	O	Y	2	R	Y	N
5	7D4	R110	EA04	VYPINAC Q0	SCHALTZUSTAND	vyp.	22	27	39	0	75	LZM	DI	O					N	Y	N	O	Y	2	R	Y	N
6	6D1	R110	EA04	VYPINAC Q0	SCHALTZUSTAND	zap.	22	27	39	0	75	LZM	DI	O					N	Y	N	O	Y	2	R	Y	N
7	6D3	R110	EA04	ODPOJOVAC Q9	SCHALTZUSTAND	vyp.	22	27	39	0	75	LZM	DI	O					N	Y	N	O	Y	2	R	Y	N
8	6D4	R110	EA04	ODPOJOVAC Q9	SCHALTZUSTAND	zap.	22	27	39	0	75	LZM	DI	O					N	Y	N	O	Y	2	R	Y	N
9	5D1	R110	EA04	ODPOJOVAC Q1	SCHALTZUSTAND	vyp.	22	27	39	0	75	LZM	DI	O					N	Y	N	O	Y	2	R	Y	N
10	5D2	R110	EA04	ODPOJOVAC Q1	SCHALTZUSTAND	zap.	22	27	39	0	75	LZM	DI	O					N	Y	N	O	Y	2	R	Y	N
11	5D3	R110	EA04		8TK PORUCHA	KON ZAC	22	27	0	39	75	PV	SI	R/C	Y	R/C	Y	1	N	N					R/C	Y	N
13	8FA	R110	EA04	ODPOJOVAC ZEMNIACI Q8	SCHALTZUSTAND	vyp.	22	27	39	0	75	LZM	DI	O					N	Y	N	O	Y	2	R	Y	N
14	7F1	R110	EA04	ODPOJOVAC ZEMNIACI Q8	SCHALTZUSTAND	zap.	22	27	39	0	75	LZM	DI	O					N	Y	N	O	Y	2	R	Y	N
15	7F2	R110	EA04		VYPN.VYPINAC.BEZ POVELU	KON ZAC	22	27	0	39	75	PV	TR	O	Y	O	Y	1	N	N					R	Y	N
16	7F3	R110	EA04		PREVADZKA S1	KON ZAC	22	27	0	39	75	PV	SI	R/C	Y	R/C	Y	1	N	Y		N	N		R/C	Y	N
17	7F4	R110	EA04		S5 POLOHA VYPN./MIESTNE	KON ZAC	22	27	0	39	75	PV	SI	R/C	Y	R/C	Y	1	N	Y		N	N		R/C	Y	N
18	6F1	R110	EA04		CHYBA OBSLUHY	KON ZAC	22	27	0	39	75	PV	SI	R/C	N				N	N					R/C	Y	N
19	6F3	R110	EA04		PREKROCENIE CASU BEHU	KON ZAC	22	27	0	39	75	PV	SI	R/C	N				N	N					R/C	Y	N
20	6F4	R110	EA04		PORUCHA VYPINACA	KON ZAC	22	27	0	39	75	PV	SI	R/C	Y	R/C	Y	1	N	N					R/C	N	Y
21	5F1	R110	EA04		STRATA js./st. NAPATI	KON ZAC	22	27	0	39	75	PV	SI	R/C	Y	R/C	Y	1	N	N					R/C	N	Y
22	5F2	R110	EA04		RUCNE VYPN. VYPINACA	KON ZAC	22	27	0	39	75	PV	TR	O	Y	O	Y	1	N	N					R	N	Y
23	5F3	R110	EA04		PORUCHA TRANSF.	KON ZAC	22	27	0	39	75	PV	SI	R/C	Y	R/C	Y	1	N	N					R/C	N	Y

Documentation structur: Standard
Source file: KO050722.ODA

Date	22.07.2005	VSZ KOSICE	SIEMENS AG ISAOOLS
Drawn	LANG		
Appr.			
Rev. / Remarks / Date / Name / Norm		Orig./Repl. 1/Repl. by	

Substation control system 6MB
Compact I/O unit:
Indications
Table

T = /BG 24
+
-S106
Page 24

Proprietary data, company confidential. All rights reserved.
Confie a titre de secret d'entreprise. Tous droits r,serv,s.
Comunicado como segredo empresarial. Reservados todos os direitos.
Confiado como secreto industrial. Nos reservamos todos los derechos.

The reproduction, transmission or use of this document or its is not permitted without express written authority.
Offenders will be liable for damages. All rights, including rights created by patent grant or registration of a utility model or design, are reserved

Documentation structur: Standard
Source file: KO050722.ODA

Station: UW KOSICE
Device: EA04 EAG
Device type: 6MB5220-1
Packet numbe 8
Version no.: 1

Connection:
Device: LZG
Subrack: LZG-BGT
Module: AST 1
UART: 2
MUX: 4

General definitions:
Rated auxiliary voltage: 60 V, 110 V, 125 V DC
LZG monitoring: Indication
Ext. met. value tr. comm.: No
LIVE contact: No
Buffer type: I/O unit normal
Timeout monitoring: Yes

Scan cycle for ind. input:
Scan cycle for fault ind.: 10
Scan number 02: 10
Scan cycle for pos. ind.: 100
Scan number 03: 3
Scan cycle for op. ind.: 1000
Scan number 04: 1

Specifications for chatter dis
Analog interval in s:
Blockage time in s:
Number of test cycle
Number of block. cyc

Input	Connect designation	Filt. of raised & cleared	Filtering of intermed. pos.	Bay blockage	Monitored as feedback	Checkback monit. time in s	Command derivation	Indication derivation	Remote transmission FP: Master station	Name of telegram	Name of info element
1	8D4		N	N	Y	20.0			IEC 870-5-101	Meldungstelegramm DM	332
2	7D1		N	N	Y	20.0			IEC 870-5-101	Meldungstelegramm DM	332
3	7D2		N	N	Y	20.0			IEC 870-5-101	Meldungstelegramm DM	333
4	7D3		N	N	Y	20.0			IEC 870-5-101	Meldungstelegramm DM	333
5	7D4		N	N	Y	1.0			IEC 870-5-101	Meldungstelegramm DM	330
6	6D1		N	N	Y	1.0			IEC 870-5-101	Meldungstelegramm DM	330
7	6D3		N	N	Y	20.0			IEC 870-5-101	Meldungstelegramm DM	335
8	6D4		N	N	Y	20.0			IEC 870-5-101	Meldungstelegramm DM	335
9	5D1		N	N	Y	20.0			IEC 870-5-101	Meldungstelegramm DM	331
10	5D2		N	N	Y	20.0			IEC 870-5-101	Meldungstelegramm DM	331
11	5D3	N		N	N		Alarm 1 (Hupenbefehl)	KVIT 8TK			
13	8FA		N	N	Y	20.0			IEC 870-5-101	Meldungstelegramm DM	334
14	7F1		N	N	Y	20.0			IEC 870-5-101	Meldungstelegramm DM	334
15	7F2			N	N		Alarm 1 (Hupenbefehl)	KVIT 8TK			
16	7F3	N		N	N		Alarm 1 (Hupenbefehl)				
17	7F4	N		N	N		Alarm 1 (Hupenbefehl)				
18	6F1	N		N	N		Alarm 1 (Hupenbefehl)	KVIT 8TK			
19	6F3	N		N	N		Alarm 1 (Hupenbefehl)	KVIT 8TK			
20	6F4	N		N	N		Alarm 1 (Hupenbefehl)				
21	5F1	N		N	N		Alarm 1 (Hupenbefehl)				
22	5F2			N	N		Alarm 1 (Hupenbefehl)				
23	5F3	N		N	N		Alarm 1 (Hupenbefehl)				

Remarks	Date	Name	Date	22.07.2005	VSZ KOSICE	SIEMENS AG ISAOOLS	Substation control system 6MB
			Drawn	LANG			Compact I/O unit:
			Appr.				Indications
			Norm		Orig./Repl. 1/Repl. by		Table

T = /BG 25
+
-S106
Page 25

Station: UW KOSICE
Device: EA04 EAG
Device type: 6MB5220-1

Output	Connect designation	Section	Bay	Logical device	Lower limit	Value text	Column section	Column bay	Column logical device	Column information	Column value text	Type of command	Entry in event list	Entry in alarm list	Entry in SML	Display in diag. as select. field	Archive	Operational indications	SW termination time in s	Checkback monit. time in s	Interlocking type:
1	3C1/3C2	R110	EA04	ODPOJOVAC Q2	SCHALTZUSTAND	8D4 vyp.	22	27	39	0	75	DC	O		N	PV	R	Y	0.6	20.0	SCHALTGERÄT
2	3C3/3C4	R110	EA04	ODPOJOVAC Q2	SCHALTZUSTAND	8D4 zap.	22	27	39	0	75	DC	O		N	PV	R	Y	0.6	20.0	SCHALTGERÄT
3	4C1/4C2	R110	EA04	ODPOJOVAC Q7	SCHALTZUSTAND	7D2 vyp.	22	27	39	0	75	DC	O		N	PV	R	Y	0.6	20.0	SCHALTGERÄT
4	4C3/4C4	R110	EA04	ODPOJOVAC Q7	SCHALTZUSTAND	7D2 zap.	22	27	39	0	75	DC	O		N	PV	R	Y	0.6	20.0	SCHALTGERÄT
5	4D1/4D2	R110	EA04	VYPINAC Q0	SCHALTZUSTAND	7D4 vyp.	22	27	39	0	75	DC	O		N	PV	R	Y	0.6	1.0	SCHALTGERÄT
6	4D3/4D4	R110	EA04	VYPINAC Q0	SCHALTZUSTAND	7D4 zap.	22	27	39	0	75	DC	O		N	PV	R	Y	0.6	1.0	SCHALTGERÄT
7	2D1/2D2	R110	EA04		KVITOVANIE	KON ZAC	22	27	0	39	75	SC	O	N	N	PV	R	N	0.6		SCHALTGERÄT
9	3E1/3E2	R110	EA04	ODPOJOVAC Q9	SCHALTZUSTAND	6D3 vyp.	22	27	39	0	75	DC	O		N	PV	R	Y	0.6	20.0	SCHALTGERÄT
10	3E3/3E4	R110	EA04	ODPOJOVAC Q9	SCHALTZUSTAND	6D3 zap.	22	27	39	0	75	DC	O		N	PV	R	Y	0.6	20.0	SCHALTGERÄT
11	4E1/4E2	R110	EA04	ODPOJOVAC Q1	SCHALTZUSTAND	5D1 vyp.	22	27	39	0	75	DC	O		N	PV	R	Y	0.6	20.0	SCHALTGERÄT
12	4E3/4E4	R110	EA04	ODPOJOVAC Q1	SCHALTZUSTAND	5D1 zap.	22	27	39	0	75	DC	O		N	PV	R	Y	0.6	20.0	SCHALTGERÄT
13	4F1/4F2	R110	EA04	ODPOJOVAC ZEMNIACI Q8	SCHALTZUSTAND	8FA vyp.	22	27	39	0	75	DC	O		N	PV	R	Y	0.6	20.0	SCHALTGERÄT
14	4F3/4F4	R110	EA04	ODPOJOVAC ZEMNIACI Q8	SCHALTZUSTAND	8FA zap.	22	27	39	0	75	DC	O		N	PV	R	Y	0.6	20.0	SCHALTGERÄT
15	2F1/2F2	R110	EA04		DEBLOKACIA BLOKOVANIA	KON ZAC	22	27	0	39	75	SC	R/C	N	N	PV	R/C	Y			SCHALTGERÄT

Proprietary data, company confidential. All rights reserved.
Confia a tire de secret dentreprise. Tous droits r,servs.
Comunicado como segredo empresarial. Reservados todos os direitos.
Confiado como secreto industrial. Nos reservamos todos los derechos.

The reproduction, transmission or use of this document or its contents is not permitted without express written authority.
Offenders will be liable for damages. All rights, including rights created by patent grant or registration of a utility model or design, are reserved

Documentation structur: Standard
Source file: KO050722.ODA

			Date	22.07.2005	VSZ KOSICE
			Drawn	LANG	
			Appr.		
Rev.	Remarks	Date	Name	Norm	Orig./Repl. 1/Repl. by

SIEMENS AG
SAIOOLS

Substation control system 6MB
Compact I/O unit:
Commands
Table

T = /BG 26
+
-S106

Station: UW KOSICE
Device: EA04 EAG
Device type: 6MB5220-1

Analog channel no.	Connect designation	Section	Bay	Logical device	Lower limit	Display value	Dimension	Zero suppression f. display in %	Text for display	Bay blockage	Thres val. for switchover in %	Process analog value in I/O uni	With live-zero monitoring	Display in diagram
1	STROM L2	R110	EA04	MESSWERTE STROM	PRUD L2	200.00	A	1.0	PRUD L2	N	0.0	N	PV	Y
2	STROM L1	R110	EA04	MESSWERTE STROM	PRUD L1	200.00	A	1.0	PRUD L1	N	0.0	N	PV	N
3	STROM L3	R110	EA04	MESSWERTE STROM	PRUD L3	200.00	A	1.0	PRUD L3	N	0.0	N	PV	N
4	UL1-UL2	R110	EA04	MESSWERTE SPANNUNG	NAPATIE L1	63.50	KV	10.0	NAPATIE L1	N	0.0	N	PV	Y
5	UL1-UL3												PV	
6	UL2-UL3												PV	
7	W-LEISTUNG	R110	EA04		VYKON CINNY	38.10	MW	1.0	VYKON CINNY	N	0.0	N	PV	Y
8	B-LEISTUNG												PV	

Proprietary data, company confidential. All rights reserved.
Confie a titre de secret d'entreprise. Tous droits reservs.
Comunicado como segredo empresarial. Reservados todos os direitos.
Confiado como secreto industrial. Nos reservamos todos los derechos.
The reproduction, transmission or use of this document or its is not permitted without express written authority.
Offenders will be liable for damages. All rights, including rights created by patent grant or registration of a utility model or design, are reserved

Documentation structur: Standard
Source file: KO050722.ODA

Remarks	Date	Name	Date	22.07.2005	VSZ KOSICE	SIEMENS AG ISAIOOLS	Substation control system 6MB
			Drawn	LANG			Compact I/O unit:
			Appr.				Analog values
			Norm		Orig./Repl. 1/Repl. by		Table

T = /BG 27
+
-S106
Page 27

Station: UW KOSICE
Device: EA04 EAG
Device type: 6MB5220-1

Analog channel no.	Connect designation	Archive	Analog recording	Recording mode	No. of val. to be averaged	Scan interval in s	Analog value type	Max. value of analog value	Keep non-return pointer	Calculated demand value	Derive percentage value	Derive metered value	Static limit monitoring: Filtering time in s	Lower limit 1	Indication at lower limit 1	Lower limit 2	Indication at lower limit 2	Upper limit 1	Indication at higher limit 1	Upper limit 2	Indication at higher limit 2
1	STROM L2	Y	PERM	Analog value direct		900	CUR	240.00	PV	PV	PV	PV	0					239.90	PRUD L2 HH1		
2	STROM L1	Y	PERM	Analog value direct		900	CUR	240.00	PV	PV	PV	PV	0					239.90	PRUD L1 HH1		
3	STROM L3	Y	PERM	Analog value direct		900	CUR	240.00	PV	PV	PV	PV	0					239.90	PRUD L3 HH1		
4	UL1-UL2	Y	PERM	Analog value direct		900	PV	76.21	PV	PV	PV	PV	0	57.15	NAPATIE L1 DH1			69.85	NAPATIE L1 HH1		
5	UL1-UL3											PV									
6	UL2-UL3											PV									
7	W-LEISTUNG	Y	PERM	Analog value direct		900	AP	45.72	PV	PV	PV	LZM									
8	B-LEISTUNG											PV									

Proprietary data, company confidential. All rights reserved.
Confia a tifre da secret d'entreprise. Tous droits reservs.
Comunicado como segredo empresarial. Reservados todos os direitos.
Confiado como secreto industrial. Nos reservamos todos los derechos.
The reproduction, transmission or use of this document or its is not permitted without expres written authority.
Offenders will be liable for damages. All rights, including rights created by patent grant or registration of a utility model or design, are reserved

Documentation structur: Standard
Source file: KO050722.ODA

Rev.	Remarks	Date	Name	Date	22.07.2005	VSZ KOSICE	SIEMENS AG ISA TOOLS	Substation control system 6MB Compact I/O unit: Analog values Table	T = /BG 28 + -S106 Page 28
				Drawn	LANG				
				Appr.					
				Norm		Orig./Repl. 1/Repl. by			

Proprietary data, company confidential. All rights reserved
Confia a ltre da secret d'entreprise. Tous droits reservs.
Comunicado como segredo empresarial. Reservados todos os direitos.
Confiado como secreto industrial. Nos reservamos todos los derechos.

The reproduction, transmission or use of this document or its
is not permitted without expres written authority.
Offenders will be liable for damages. All rights, including rights
created by patent grant or registration of a utility model or design, are reserved

Station: UW KOSICE
Device: EA04 EAG
Device type: 6MB5220-1

Analog channel no.	Connect designation	Teletrans. FP raw val. Master station	Name of telegram	Name of info element
1	STROM L2	IEC 870-5-101	Meßwerttelegramm	730
2	STROM L1	IEC 870-5-101	Meßwerttelegramm	731
3	STROM L3	IEC 870-5-101	Meßwerttelegramm	732
4	UL1-UL2	IEC 870-5-101	Meßwerttelegramm	734
5	UL1-UL3			
6	UL2-UL3			
7	W-LEISTUNG	IEC 870-5-101	Meßwerttelegramm	733
8	B-LEISTUNG			

Documentation structur: Standard
Source file: KO050722.ODA

Date	22.07.2005	VSZ KOSICE	SIEMENS AG ISATOOLS	Substation control system 6MB	T = /BG 29
Drawn	LANG			Compact I/O unit:	+
Appr.				Analog values	-S106
Remarks	Date	Name Norm	Orig./Repl. 1/Repl. by	Table	Page 29

Proprietary data, company confidential. All rights reserved
Confiaa a titre de secret d'entreprise. Tous droits r.serv.s.
Comunicado como secreto empresarial. Reservados todos os direitos.
Confiado como secreto industrial. Nos reservamos todos los derechos.

The reproduction, transmission or use of this document or its is not permitted without expres written authority.
Offenders will be liable for damages. All rights, including rights
created by patent grant or registration of a utility model or design, are reserved

Station: UW KOSICE
Device: EA05 EAG
Device type: 6MB5220-1
Packet numbe 8
Version no.: 1

Connection:
Device: LZG
Subrack: LZG-BGT
Module: AST 1
UART: 2
MUX: 5

General definitions:

Rated auxiliary voltage: 60 V, 110 V, 125 V DC
LZG monitoring: Indication
Ext. met. value tr. comm.: No
LIVE contact: No
Buffer type: I/O unit normal
Timeout monitoring: Yes

Scan cycle for ind. input:

Scan cycle for fault ind.: 10
Scan number 02: 10
Scan cycle for pos. ind.: 100
Scan number 03: 3
Scan cycle for op. ind.: 1000
Scan number 04: 1

Specifications for chatter dis

Analog interval in s:
Blockage time in s:
Number of test cycle
Number of block. cyc

Input	Connect designation	Section	Bay	Logical device	Lower limit	Value text	Column section	Column bay	Column logical device	Column information	Column value text	With command	Indication type	Entry in event list	Entry in alarm list	Acknowledge	Display in indication area	Indication class	Entry in SML	Display in diagram	Display of intermed. pos.	Acknowledge	Display under voltage level	Indication class	Archive	Operational indications	Protection indications	Filt. of raised & cleared	Filtering of intermed. pos.
1	8D4	R110	EA05	ODPOJOVAC Q20	SCHALTZUSTAND	vyp.	22	27	39	0	75	LZM	DI	O					N	Y	N	O	Y	2	R	Y	N		N
2	7D1	R110	EA05	ODPOJOVAC Q20	SCHALTZUSTAND	zap.	22	27	39	0	75	LZM	DI	O					N	Y	N	O	Y	2	R	Y	N		N
3	7D2	R110	EA05	ODPOJOVAC Q2	SCHALTZUSTAND	vyp.	22	27	39	0	75	LZM	DI	O					N	Y	N	O	Y	2	R	Y	N		N
4	7D3	R110	EA05	ODPOJOVAC Q2	SCHALTZUSTAND	zap.	22	27	39	0	75	LZM	DI	O					N	Y	N	O	Y	2	R	Y	N		N
5	7D4																												
6	6D1																												
7	6D3	R110	EA05	ODPOJOVAC Q7	SCHALTZUSTAND	vyp.	22	27	39	0	75	LZM	DI	O					N	Y	N	O	Y	2	R	Y	N		N
8	6D4	R110	EA05	ODPOJOVAC Q7	SCHALTZUSTAND	zap.	22	27	39	0	75	LZM	DI	O					N	Y	N	O	Y	2	R	Y	N		N
9	5D1	R110	EA05	ODPOJOVAC Q1	SCHALTZUSTAND	vyp.	22	27	39	0	75	LZM	DI	O					N	Y	N	O	Y	2	R	Y	N		N
10	5D2	R110	EA05	ODPOJOVAC Q1	SCHALTZUSTAND	zap.	22	27	39	0	75	LZM	DI	O					N	Y	N	O	Y	2	R	Y	N		N
11	5D3																												
13	8FA																												
14	7F1	R110	EA05		8TK PORUCHA	KON ZAC	22	27	0	39	75	PV	SI	R/C	Y	R/C	Y	1	N	N					R/C	Y	N	N	
15	7F2	R110	EA05		VYPN.VYPINAC.BEZ POVELU	KON ZAC	22	27	0	39	75	PV	TR	O	Y	O	Y	1	N	N					R	Y	N		
16	7F3	R110	EA05		PREVADZKA S1	KON ZAC	22	27	0	39	75	PV	SI	R/C	Y	R/C	Y	1	N	Y		N	N		R/C	Y	N	N	
17	7F4	R110	EA05		S5 POLOHA VYPN./MIESTNE	KON ZAC	22	27	0	39	75	PV	SI	R/C	Y	R/C	Y	1	N	Y		N	N		R/C	Y	N	N	
18	6F1	R110	EA05		CHYBA OBSLUHY	KON ZAC	22	27	0	39	75	PV	SI	R/C	N				N	N					R/C	Y	N	N	
19	6F3	R110	EA05		PREKROCENIE CASU BEHU	KON ZAC	22	27	0	39	75	PV	SI	R/C	N				N	N					R/C	Y	N	N	
20	6F4	R110	EA05		PORUCHA VYPINACA	KON ZAC	22	27	0	39	75	PV	SI	R/C	Y	R/C	Y	1	N	N					R/C	Y	Y	N	
21	5F1	R110	EA05		STRATA js./st. NAPATI	KON ZAC	22	27	0	39	75	PV	SI	R/C	Y	R/C	Y	1	N	N					R/C	Y	Y	N	
22	5F2	R110	EA05		SYNCHROTAKT V CINNOSTI	KON ZAC	22	27	0	39	75	PV	SI	R/C	N				N	N					R/C	Y	N	N	
23	5F3	R110	EA05		PORUCHA SYNCHROTAKTU	KON ZAC	22	27	0	39	75	PV	SI	R/C	Y	R/C	Y	1	N	N					R/C	Y	Y	N	

Documentation structur: Standard
Source file: KO050722.ODA

			Date	22.07.2005	VSZ KOSICE	SIEMENS AG ISAOOLS
			Drawn	LANG		
			Appr.			
Rev.	Remarks	Date	Name	Norm	Orig./Repl. 1/Repl. by	

Substation control system 6MB
Compact I/O unit:
Indications
Table

T = /BG 30
+
-S106
Page 30

Station: UW KOSICE
Device: EA05 EAG
Device type: 6MB5220-1
Packet numbe 8
Version no.: 1

Connection:
Device: LZG
Subrack: LZG-BGT
Module: AST 1
UART: 2
MUX: 5

General definitions:
Rated auxiliary voltage: 60 V, 110 V, 125 V DC
LZG monitoring: Indication
Ext. met. value tr. comm.: No
LIVE contact: No
Buffer type: I/O unit normal
Timeout monitoring: Yes

Scan cycle for ind. input:
Scan cycle for fault ind.: 10
Scan number 02: 10
Scan cycle for pos. ind.: 100
Scan number 03: 3
Scan cycle for op. ind.: 1000
Scan number 04: 1

Specifications for chatter dis
Analog interval in s:
Blockage time in s:
Number of test cycle
Number of block. cyc

Input	Connect designation	Bay blockage	Monitored as feedback	Checkback monit. time in s	Command derivation	Indication derivation	Remote transmission FP: Master station	Name of telegram	Name of info element
1	8D4	N	Y	20.0			IEC 870-5-101	Meldungstelegramm DM	347
2	7D1	N	Y	20.0			IEC 870-5-101	Meldungstelegramm DM	347
3	7D2	N	Y	20.0			IEC 870-5-101	Meldungstelegramm DM	342
4	7D3	N	Y	20.0			IEC 870-5-101	Meldungstelegramm DM	342
5	7D4								
6	6D1								
7	6D3	N	Y	20.0			IEC 870-5-101	Meldungstelegramm DM	343
8	6D4	N	Y	20.0			IEC 870-5-101	Meldungstelegramm DM	343
9	5D1	N	Y	20.0			IEC 870-5-101	Meldungstelegramm DM	341
10	5D2	N	Y	20.0			IEC 870-5-101	Meldungstelegramm DM	341
11	5D3								
13	8FA								
14	7F1	N	N		Alarm 1 (Hupenbefehl)	KVIT 8TK			
15	7F2	N	N		Alarm 1 (Hupenbefehl)	KVIT 8TK			
16	7F3	N	N		Alarm 1 (Hupenbefehl)				
17	7F4	N	N		Alarm 1 (Hupenbefehl)				
18	6F1	N	N		Alarm 1 (Hupenbefehl)	KVIT 8TK			
19	6F3	N	N		Alarm 1 (Hupenbefehl)	KVIT 8TK			
20	6F4	N	N		Alarm 1 (Hupenbefehl)				
21	5F1	N	N		Alarm 1 (Hupenbefehl)				
22	5F2	N	N						
23	5F3	N	N		Alarm 1 (Hupenbefehl)				

Proprietary data, company confidential. All rights reserved.
Confie a titre de secret d'entreprise. Tous droits reservés.
Comunicado como segredo empresarial. Reservados todos os direitos.
Confiado como secreto industrial. Nos reservamos todos los derechos.
The reproduction, transmission or use of this document or its is not permitted without express written authority.
Offenders will be liable for damages. All rights, including rights created by patent grant or registration of a utility model or design, are reserved

Documentation structur: Standard
Source file: KO050722.ODA

Remarks	Date	Name	Date	22.07.2005	VSZ KOSICE	SIEMENS AG ISAOOLS	Substation control system 6MB
			Drawn	LANG			Compact I/O unit:
			Appr.				Indications
			Norm		Orig./Repl. 1/Repl. by		Table

T = /BG 31
+
-S106
Page 31

Station: UW KOSICE
Device: EA05 EAG
Device type: 6MB5220-1

Output	Connect designation	Section	Bay	Logical device	Lower limit	Value text	Column section	Column bay	Column logical device	Column information	Column value text	Type of command	Entry in event list	Entry in alarm list	Entry in SML	Display in diag. as select. field	Archive	Operational indications	SW termination time in s	Checkback monit. time in s	Interlocking type:
1	3C1/3C2	R110	EA05	ODPOJOVAC Q20	SCHALTZUSTAND	8D4 vyp.	22	27	39	0	75	DC	O		N	PV	R	Y	0.6	20.0	SCHALTGERÄT
2	3C3/3C4	R110	EA05	ODPOJOVAC Q20	SCHALTZUSTAND	8D4 zap.	22	27	39	0	75	DC	O		N	PV	R	Y	0.6	20.0	SCHALTGERÄT
3	4C1/4C2	R110	EA05	ODPOJOVAC Q2	SCHALTZUSTAND	7D2 vyp.	22	27	39	0	75	DC	O		N	PV	R	Y	0.6	20.0	SCHALTGERÄT
4	4C3/4C4	R110	EA05	ODPOJOVAC Q2	SCHALTZUSTAND	7D2 zap.	22	27	39	0	75	DC	O		N	PV	R	Y	0.6	20.0	SCHALTGERÄT
5	4D1/4D2															PV					
6	4D3/4D4															PV					
7	2D1/2D2	R110	EA05		KVITOVANIE	KON ZAC	22	27	0	39	75	SC	O	N	N	PV	R	N	0.6		SCHALTGERÄT
9	3E1/3E2	R110	EA05	ODPOJOVAC Q7	SCHALTZUSTAND	6D3 vyp.	22	27	39	0	75	DC	O		N	PV	R	Y	0.6	20.0	SCHALTGERÄT
10	3E3/3E4	R110	EA05	ODPOJOVAC Q7	SCHALTZUSTAND	6D3 zap.	22	27	39	0	75	DC	O		N	PV	R	Y	0.6	20.0	SCHALTGERÄT
11	4E1/4E2	R110	EA05	ODPOJOVAC Q1	SCHALTZUSTAND	5D1 vyp.	22	27	39	0	75	DC	O		N	PV	R	Y	0.6	20.0	SCHALTGERÄT
12	4E3/4E4	R110	EA05	ODPOJOVAC Q1	SCHALTZUSTAND	5D1 zap.	22	27	39	0	75	DC	O		N	PV	R	Y	0.6	20.0	SCHALTGERÄT
13	4F1/4F2															PV					
14	4F3/4F4															PV					
15	2F1/2F2	R110	EA05		DEBLOKACIA BLOKOVANIA	KON ZAC	22	27	0	39	75	SC	R/C	N	N	PV	R/C	Y			SCHALTGERÄT

Proprietary data, company confidential. All rights reserved
Confia a tire da secret d'entreprise. Tous droits reservis
Comunicado como segredo empressarial. Reservados todos os direitos.
Confiado como secreto industrial. Nos reservamos todos los derechos.

The reproduction, transmission or use of this document or its contents is not permitted without expres written authority. Offenders will be liable for damages. All rights, including rights created by patent grant or registration of a utility model or design, are reserved

Documentation structur: Standard
Source file: KO050722.ODA

Rev.	Remarks	Date	Name	Norm	Date 22.07.2005	Drawn LANG	Appr.	Orig./Repl. 1/Repl. by

VSZ KOSICE

SIEMENS AG ISAOOLS

Substation control system 6MB
Compact I/O unit:
Commands
Table

T = /BG 32
+
-S106
Page 32

Station: UW KOSICE
Device: EA05 EAG
Device type: 6MB5220-1

Analog channel no.	Connect designation	Section	Bay	Logical device	Lower limit	Display value	Dimension	Zero suppression f. display in %	Text for display	Bay blockage	Thres val. for switchover in %	Process analog value in I/O uni	With live-zero monitoring	Display in diagram	Archive	Analog recording	Recording mode	No. of val. to be averaged	Scan interval in s	Analog value type	Max. value of analog value
1	STROM L2	R110	EA05	MESSWERTE STROM	PRUD L2	500.00	A	1.0	PRUD L2	N	0.0	N	PV	Y	Y	PERM	Analog value direct		900	CUR	600.00
2	STROM L1	R110	EA05	MESSWERTE STROM	PRUD L1	500.00	A	1.0	PRUD L1	N	0.0	N	PV	N	Y	PERM	Analog value direct		900	CUR	599.90
3	STROM L3	R110	EA05	MESSWERTE STROM	PRUD L3	500.00	A	1.0	PRUD L3	N	0.0	N	PV	N	Y	PERM	Analog value direct		900	CUR	600.00
4	UL1-UL2	R110	EA05	MESSWERTE SPANNUNG	NAPATIE L1	63.50	KV	10.0	NAPATIE L1	N	0.0	N	PV	Y	Y	PERM	Analog value direct		900	PV	76.21
5	UL1-UL3												PV								
6	UL2-UL3												PV								
7	W-LEISTUNG												PV								
8	B-LEISTUNG												PV								

Proprietary data, company confidential. All rights reserved.
Confia a titre de secret d'entreprise. Tous droits reservs.
Comunicado como segredo empresarial. Reservados todos os direitos.
Confiado como secreto industrial. Nos reservamos todos los derechos.

The reproduction, transmission or use of this document or its is not permitted without expres written authority.
Offenders will be liable for damages. All rights, including rights created by patent grant or registration of a utility model or design, are reserved

Documentation structur: Standard
Source file: KO050722.ODA

Remarks	Date	Name	Date	22.07.2005	VSZ KOSICE	SIEMENS AG ISA TOOLS	Substation control system 6MB
			Drawn	LANG			Compact I/O unit:
			Appr.				Analog values
			Norm		Orig./Repl. 1/Repl. by		Table

T = /BG 33
+
-S106
Page 33

Station: UW KOSICE
Device: EA05 EAG
Device type: 6MB5220-1

Analog channel no.	Connect designation	Keep non-return pointer	Calculated demand value	Derive percentage value	Derive metered value	Static limit monitoring: Filtering time in s	Lower limit 1	Indication at lower limit 1	Lower limit 2	Indication at lower limit 2	Upper limit 1	Indication at higher limit 1	Upper limit 2	Indication at higher limit 2	Teletrans. FP raw val. Master station	Name of telegram	Name of info element
1	STROM L2	PV	PV	PV	PV	0					599.90	PRUD L2 HH1			IEC 870-5-101	Meßwerttelegramm	740
2	STROM L1	PV	PV	PV	PV	0					599.90	PRUD L1 HH1			IEC 870-5-101	Meßwerttelegramm	741
3	STROM L3	PV	PV	PV	PV	0					599.90	PRUD L3 HH1			IEC 870-5-101	Meßwerttelegramm	742
4	UL1-UL2	PV	PV	PV	PV	0	57.15	NAPATIE L1 DH1			69.85	NAPATIE L1 HH1			IEC 870-5-101	Meßwerttelegramm	743
5	UL1-UL3				PV												
6	UL2-UL3				PV												
7	W-LEISTUNG				PV												
8	B-LEISTUNG				PV												

Proprietary data, company confidential. All rights reserved.
Confie a titre de secret d'entreprise. Tous droits reservés.
Comunicado como segredo empresarial. Reservados todos os direitos.
Confiado como secreto industrial. Nos reservamos todos los derechos.

The reproduction, transmission or use of this document or its is not permitted without express written authority.
Offenders will be liable for damages. All rights, including rights created by patent grant or registration of a utility model or design, are reserved.

Documentation structur: Standard
Source file: KO050722.ODA

Rev.	Remarks	Date	Name	Date	22.07.2005
				Drawn	LANG
				Appr.	
				Norm	

VSZ
KOSICE

Orig./Repl. 1/Repl. by

SIEMENS AG
ISA TOOLS

Substation control system 6MB
Compact I/O unit:
Analog values
Table

T = /BG 34
+
-S106
Page 34

Station: UW KOSICE
Device: EA06 EAG
Device type: 6MB5220-1
Packet numbe 8
Version no.: 1

Connection:
Device: LZG
Subrack: LZG-BGT
Module: AST 1
UART: 2
MUX: 6

General definitions:

Rated auxiliary voltage: 60 V, 110 V, 125 V DC
LZG monitoring: Indication
Ext. met. value tr. comm.: No
LIVE contact: No
Buffer type: I/O unit normal
Timeout monitoring: Yes

Scan cycle for ind. input:

Scan cycle for fault ind.: 10
Scan number 02: 10
Scan cycle for pos. ind.: 100
Scan number 03: 3
Scan cycle for op. ind.: 1000
Scan number 04: 1

Specifications for chatter dis

Analog interval in s:
Blockage time in s:
Number of test cycle
Number of block. cyc

Input	Connect designation	Section	Bay	Logical device	Lower limit	Value text	Column section	Column bay	Column logical device	Column information	Column value text	With command	Indication type	Entry in event list	Entry in alarm list	Acknowledge	Display in indication area	Indication class	Entry in SML	Display in diagram	Display of intermed. pos.	Acknowledge	Display under voltage level	Indication class	Archive	Operational indications	Protection indications	Filt. of raised & cleared	Filtering of intermed. pos.	Bay blockage
1	8D4	R110	EA06	ODPOJOVAC Q2	SCHALTZUSTAND	vyp.	22	27	39	0	75	LZM	DI	O					N	Y	N	O	Y	2	R	Y	N		N	N
2	7D1	R110	EA06	ODPOJOVAC Q2	SCHALTZUSTAND	zap.	22	27	39	0	75	LZM	DI	O					N	Y	N	O	Y	2	R	Y	N		N	N
3	7D2	R110	EA06	ODPOJOVAC Q7	SCHALTZUSTAND	vyp.	22	27	39	0	75	LZM	DI	O					N	Y	N	O	Y	2	R	Y	N		N	N
4	7D3	R110	EA06	ODPOJOVAC Q7	SCHALTZUSTAND	zap.	22	27	39	0	75	LZM	DI	O					N	Y	N	O	Y	2	R	Y	N		N	N
5	7D4	R110	EA06	VYPINAC Q0	SCHALTZUSTAND	vyp.	22	27	39	0	75	LZM	DI	O					N	Y	N	O	Y	2	R	Y	N		N	N
6	6D1	R110	EA06	VYPINAC Q0	SCHALTZUSTAND	zap.	22	27	39	0	75	LZM	DI	O					N	Y	N	O	Y	2	R	Y	N		N	N
7	6D3	R110	EA06	ODPOJOVAC Q9	SCHALTZUSTAND	vyp.	22	27	39	0	75	LZM	DI	O					N	Y	N	O	Y	2	R	Y	N		N	N
8	6D4	R110	EA06	ODPOJOVAC Q9	SCHALTZUSTAND	zap.	22	27	39	0	75	LZM	DI	O					N	Y	N	O	Y	2	R	Y	N		N	N
9	5D1	R110	EA06	ODPOJOVAC Q1	SCHALTZUSTAND	vyp.	22	27	39	0	75	LZM	DI	O					N	Y	N	O	Y	2	R	Y	N		N	N
10	5D2	R110	EA06	ODPOJOVAC Q1	SCHALTZUSTAND	zap.	22	27	39	0	75	LZM	DI	O					N	Y	N	O	Y	2	R	Y	N		N	N
11	5D3																													
13	8FA																													
14	7F1	R110	EA06		8TK PORUCHA	KON ZAC	22	27	0	39	75	PV	SI	R/C	Y	R/C	Y	1	N	N					R/C	Y	N	N		N
15	7F2	R110	EA06		VYPN.VYPINAC.BEZ POVELU	KON ZAC	22	27	0	39	75	PV	TR	O	Y	O	Y	1	N	N					R	Y	N			N
16	7F3	R110	EA06		PREVADZKA S1	KON ZAC	22	27	0	39	75	PV	SI	R/C	Y	R/C	Y	1	N	Y		N	N		R/C	Y	N	N		N
17	7F4	R110	EA06		S5 POLOHA VYPN./MIESTNE	KON ZAC	22	27	0	39	75	PV	SI	R/C	Y	R/C	Y	1	N	Y		N	N		R/C	Y	N	N		N
18	6F1	R110	EA06		CHYBA OBSLUHY	KON ZAC	22	27	0	39	75	PV	SI	R/C	N				N	N					R/C	Y	N	N		N
19	6F3	R110	EA06		PREKROCENIE CASU BEHU	KON ZAC	22	27	0	39	75	PV	SI	R/C	N				N	N					R/C	Y	N	N		N
20	6F4	R110	EA06		PORUCHA VYPINACA	KON ZAC	22	27	0	39	75	PV	SI	R/C	Y	R/C	Y	1	N	N					R/C	N	Y	N		N
21	5F1	R110	EA06		STRATA js./st. NAPATI	KON ZAC	22	27	0	39	75	PV	SI	R/C	Y	R/C	Y	1	N	N					R/C	N	Y	N		N
22	5F2	R110	EA06		RUCNE VYPN. VYPINACA	KON ZAC	22	27	0	39	75	PV	TR	O	Y	O	Y	1	N	N					R	N	Y			N
23	5F3	R110	EA06		PORUCHA TRANSF. T101	KON ZAC	22	27	0	39	75	PV	SI	R/C	Y	R/C	Y	1	N	N					R/C	N	Y	N		N

Proprietary data, company confidential. All rights reserved.
Confia a tire de secret d'entreprise. Tous droits r.serv.s.
Comunicado como segredo empressarial. Reservados todos os direitos.
Confiado como secreto industrial. Nos reservamos todos los derechos.

The reproduction, transmission or use of this document or its contents is not permitted without express written authority. Offenders will be liable for damages. All rights, including rights created by patent grant or registration of a utility model or design, are reserved.

Documentation structur: Standard
Source file: KO050722.ODA

Date	22.07.2005	VSZ KOSICE	SIEMENS AG ISAOOLS	Substation control system 6MB	T = /BG 35
Drawn	LANG			Compact I/O unit:	+
Appr.				Indications	-S106
Remarks	Date	Name Norm	Orig./Repl. 1/Repl. by	Table	Page 05

Station: UW KOSICE
Device: EA06 EAG
Device type: 6MB5220-1
Packet numbe 8
Version no.: 1

Connection:
Device: LZG
Subrack: LZG-BGT
Module: AST 1
UART: 2
MUX: 6

General definitions:
Rated auxiliary voltage: 60 V, 110 V, 125 V DC
LZG monitoring: Indication
Ext. met. value tr. comm.: No
LIVE contact: No
Buffer type: I/O unit normal
Timeout monitoring: Yes

Scan cycle for ind. input:
Scan cycle for fault ind.: 10
Scan number 02: 10
Scan cycle for pos. ind.: 100
Scan number 03: 3
Scan cycle for op. ind.: 1000
Scan number 04: 1

Specifications for chatter dis
Analog interval in s:
Blockage time in s:
Number of test cycle
Number of block. cyc

Input	Connect designation	Monitored as feedback	Checkback monit. time in s	Command derivation	Indication derivation	Remote transmission FP: Master station	Name of telegram	Name of info element
1	8D4	Y	20.0			IEC 870-5-101	Meldungstelegramm DM	352
2	7D1	Y	20.0			IEC 870-5-101	Meldungstelegramm DM	352
3	7D2	Y	20.0			IEC 870-5-101	Meldungstelegramm DM	353
4	7D3	Y	20.0			IEC 870-5-101	Meldungstelegramm DM	353
5	7D4	Y	1.0			IEC 870-5-101	Meldungstelegramm DM	350
6	6D1	Y	1.0			IEC 870-5-101	Meldungstelegramm DM	350
7	6D3	Y	20.0			IEC 870-5-101	Meldungstelegramm DM	355
8	6D4	Y	20.0			IEC 870-5-101	Meldungstelegramm DM	355
9	5D1	Y	20.0			IEC 870-5-101	Meldungstelegramm DM	351
10	5D2	Y	20.0			IEC 870-5-101	Meldungstelegramm DM	351
11	5D3							
13	8FA							
14	7F1	N		Alarm 1 (Hupenbefehl)	KVIT 8TK			
15	7F2	N		Alarm 1 (Hupenbefehl)	KVIT 8TK			
16	7F3	N		Alarm 1 (Hupenbefehl)				
17	7F4	N		Alarm 1 (Hupenbefehl)				
18	6F1	N		Alarm 1 (Hupenbefehl)	KVIT 8TK			
19	6F3	N		Alarm 1 (Hupenbefehl)	KVIT 8TK			
20	6F4	N		Alarm 1 (Hupenbefehl)				
21	5F1	N		Alarm 1 (Hupenbefehl)				
22	5F2	N		Alarm 1 (Hupenbefehl)				
23	5F3	N		Alarm 1 (Hupenbefehl)				

Proprietary data, company confidential. All rights reserved.
Confie a titre de secret d'entreprise. Tous droits r,serv,s.
Comunicado como segredo empresarial. Reservados todos os direitos.
Confiado como secreto industrial. Nos reservamos todos los derechos.
The reproduction, transmission or use of this document or its is not permitted without expres written authority.
Offenders will be liable for damages. All rights, including rights created by patent grant or registration of a utility model or design, are reserved

Documentation structur: Standard
Source file: KO050722.ODA

Rev.	Remarks	Date	Name	Date	22.07.2005	VSZ KOSICE	SIEMENS AG ISAOOLS	Substation control system 6MB
				Drawn	LANG			Compact I/O unit:
				Appr.				Indications
				Norm		Orig./Repl. 1/Repl. by		Table

T = /BG 36
+
-S106
Page 36

Station: UW KOSICE
Device: EA06 EAG
Device type: 6MB5220-1

Output	Connect designation	Section	Bay	Logical device	Lower limit	Value text		Column section	Column bay	Column logical device	Column information	Column value text	Type of command	Entry in event list	Entry in alarm list	Entry in SML	Display in diag. as select. field	Archive	Operational indications	SW termination time in s	Checkback monit. time in s	Interlocking type:
1	3C1/3C2	R110	EA06	ODPOJOVAC Q2	SCHALTZUSTAND	8D4	vyp.	22	27	39	0	75	DC	O		N	PV	R	Y	0.6	20.0	SCHALTGERÄT
2	3C3/3C4	R110	EA06	ODPOJOVAC Q2	SCHALTZUSTAND	8D4	zap.	22	27	39	0	75	DC	O		N	PV	R	Y	0.6	20.0	SCHALTGERÄT
3	4C1/4C2	R110	EA06	ODPOJOVAC Q7	SCHALTZUSTAND	7D2	vyp.	22	27	39	0	75	DC	O		N	PV	R	Y	0.6	20.0	SCHALTGERÄT
4	4C3/4C4	R110	EA06	ODPOJOVAC Q7	SCHALTZUSTAND	7D2	zap.	22	27	39	0	75	DC	O		N	PV	R	Y	0.6	20.0	SCHALTGERÄT
5	4D1/4D2	R110	EA06	VYPINAC Q0	SCHALTZUSTAND	7D4	vyp.	22	27	39	0	75	DC	O		N	PV	R	Y	0.6	1.0	SCHALTGERÄT
6	4D3/4D4	R110	EA06	VYPINAC Q0	SCHALTZUSTAND	7D4	zap.	22	27	39	0	75	DC	O		N	PV	R	Y	0.6	1.0	SCHALTGERÄT
7	2D1/2D2	R110	EA06		KVITOVANIE	KON	ZAC	22	27	0	39	75	SC	O	N	N	PV	R	N	0.6		SCHALTGERÄT
9	3E1/3E2	R110	EA06	ODPOJOVAC Q9	SCHALTZUSTAND	6D3	vyp.	22	27	39	0	75	DC	O		N	PV	R	Y	0.6	20.0	SCHALTGERÄT
10	3E3/3E4	R110	EA06	ODPOJOVAC Q9	SCHALTZUSTAND	6D3	zap.	22	27	39	0	75	DC	O		N	PV	R	Y	0.6	20.0	SCHALTGERÄT
11	4E1/4E2	R110	EA06	ODPOJOVAC Q1	SCHALTZUSTAND	5D1	vyp.	22	27	39	0	75	DC	O		N	PV	R	Y	0.6	20.0	SCHALTGERÄT
12	4E3/4E4	R110	EA06	ODPOJOVAC Q1	SCHALTZUSTAND	5D1	zap.	22	27	39	0	75	DC	O		N	PV	R	Y	0.6	20.0	SCHALTGERÄT
13	4F1/4F2																PV					
14	4F3/4F4																PV					
15	2F1/2F2	R110	EA06		DEBLOKACIA BLOKOVANIA	KON	ZAC	22	27	0	39	75	SC	R/C	N	N	PV	R/C	Y			SCHALTGERÄT

Proprietary data, company confidential. All rights reserved.
Confiar a titre de secret d'entreprise. Tous droits réservés.
Comunicado como segredo empresarial. Reservados todos os direitos.
Confiado como secreto industrial. Nos reservamos todos los derechos.

The reproduction, transmission or use of this document or its is not permitted without express written authority.
Offenders will be liable for damages. All rights, including rights created by patent grant or registration of a utility model or design, are reserved

Documentation structur: Standard
Source file: KO050722.ODA

Remarks	Date	Name	Date	22.07.2005	VSZ KOSICE	SIEMENS AG ISAOOLS	Substation control system 6MB
			Drawn	LANG			Compact I/O unit:
			Appr.				Commands
			Norm		Orig./Repl. 1/Repl. by		Table

T = /BG 37
+
-S106
Page 27

Station: UW KOSICE
Device: EA06 EAG
Device type: 6MB5220-1

Analog channel no.	Connect designation	Section	Bay	Logical device	Lower limit	Display value	Dimension	Zero suppression f. display in %	Text for display	Bay blockage	Thres val. for switchover in %	Process analog value in I/O uni	With live-zero monitoring	Display in diagram	Archive	Analog recording	Recording mode	No. of val. to be averaged	Scan interval in s	Analog value type	Max. value of analog value	Keep non-return pointer	Calculated demand value
1	STROM L2	R110	EA06	MESSWERTE STROM	PRUD L2	200.00	A	1.0	PRUD L2	N	0.0	N	PV	Y	Y	PERM	Analog value direct		900	CUR	240.00	PV	PV
2	STROM L1	R110	EA06	MESSWERTE STROM	PRUD L1	200.00	A	1.0	PRUD L1	N	0.0	N	PV	N	Y	PERM	Analog value direct		900	CUR	240.00	PV	PV
3	STROM L3	R110	EA06	MESSWERTE STROM	PRUD L3	200.00	A	1.0	PRUD L3	N	0.0	N	PV	N	Y	PERM	Analog value direct		900	CUR	240.00	PV	PV
4	UL1-UL2												PV										
5	UL1-UL3												PV										
6	UL2-UL3												PV										
7	W-LEISTUNG												PV										
8	B-LEISTUNG												PV										

Proprietary data, company confidential. All rights reserved.
Confidential data. All rights reserved.
Confidential data. Tous droits réservés.
Comunicado como segredo empresarial. Reservados todos os direitos.
Comunicado como secreto industrial. Nos reservamos todos los derechos.

The reproduction, transmission or use of this document or its contents is not permitted without express written authority. Offenders will be liable for damages. All rights, including rights created by patent grant or registration of a utility model or design, are reserved.

Documentation structure: Standard
Source file: KO050722.ODA

Date	22.07.2005	VSZ KOSICE	SIEMENS AG ISAIOOLS	Substation control system 6MB
Drawn	LANG			Compact I/O unit:
Appr.				Analog values
Norm		Orig./Repl. 1/Repl. by		Table

Rev. | Remarks | Date | Name

T = /BG 38
+
-S106
Page 38

Station: UW KOSICE
Device: EA06 EAG
Device type: 6MB5220-1

Analog channel no.	Connect designation	Derive percentage value	Derive metered value	Static limit monitoring: Filtering time in s	Lower limit 1	Indication at lower limit 1	Lower limit 2	Indication at lower limit 2	Upper limit 1	Indication at higher limit 1	Upper limit 2	Indication at higher limit 2	Teletrans. FP raw val.: Master station	Name of telegram	Name of info element
1	STROM L2	PV	PV	0					239.90	PRUD L2 HH1			IEC 870-5-101	Meßwerttelegramm	750
2	STROM L1	PV	PV	0					239.90	PRUD L1 HH1			IEC 870-5-101	Meßwerttelegramm	751
3	STROM L3	PV	PV	0					239.90	PRUD L3 HH1			IEC 870-5-101	Meßwerttelegramm	752
4	UL1-UL2		PV												
5	UL1-UL3		PV												
6	UL2-UL3		PV												
7	W-LEISTUNG		PV												
8	B-LEISTUNG		PV												

Proprietary data, company confidential. All rights reserved.
Confia a litre de secret d'entreprise. Tous droits reservis.
Comunicado como segredo empresarial. Reservados todos os direitos.
Contiado como secreto industrial. Nos reservamos todos los derechos.

The reproduction, transmission or use of this document or its contents is not permitted without express written authority. Offenders will be liable for damages. All rights, including rights created by patent grant or registration of a utility model or design, are reserved.

Documentation structur: Standard
Source file: KO050722.ODA

Remarks	Date	Name	Norm	
			Date	22.07.2005
			Drawn	LANG
			Appr.	

VSZ KOSICE
Orig./Repl. 1/Repl. by

SIEMENS AG
ISAIOOLS

Substation control system 6MB
Compact I/O unit:
Analog values
Table

T = /BG 39
+
-S106
Page 29

Proprietary data, company confidential. All rights reserved.
Confia a tire de secret dentreprise. Tous droits r.serv.s.
Comunicado como segredo empresarial. Reservados todos os direitos.
Confiado como secreto industrial. Nos reservamos todos los derechos.
The reproduction, transmission or use of this document or its
is not permitted without expres written authority.
Offenders will be liable for damages. All rights, including rights
created by patent grant or registration of a utility model or design, are reserved

Station: UW KOSICE
Device: EA07 EAG
Device type: 6MB5220-1
Packet numbe 8
Version no.: 1

Connection:
Device: LZG
Subrack: LZG-BGT
Module: AST 1
UART: 2
MUX: 7

General definitions:

Rated auxiliary voltage: 60 V, 110 V, 125 V DC
LZG monitoring: Indication
Ext. met. value tr. comm.: No
LIVE contact: No
Buffer type: I/O unit normal
Timeout monitoring: Yes

Scan cycle for ind. input:

Scan cycle for fault ind.: 10
Scan number 02: 10
Scan cycle for pos. ind.: 100
Scan number 03: 3
Scan cycle for op. ind.: 1000
Scan number 04: 1

Specifications for chatter dis

Analog interval in s:
Blockage time in s:
Number of test cycle
Number of block. cyc

Input	Connect designation	Section	Bay	Logical device	Lower limit	Value text	Column section	Column bay	Column logical device	Column information	Column value text	With command	Indication type	Entry in event list	Entry in alarm list	Acknowledge	Display in indication area	Indication class	Entry in SML	Display in diagram	Display of intermed. pos.	Acknowledge	Display under voltage level	Indication class	Archive	Operational indications	Protection indications	Filt. of raised & cleared	Filtering of intermed. pos.	Bay blockage
1	8D4	R110	EA07	ODPOJOVAC Q2	SCHALTZUSTAND	vyp.	22	27	39	0	75	LZM	DI	O					N	Y	N	O	Y	2	R	Y	N		N	N
2	7D1	R110	EA07	ODPOJOVAC Q2	SCHALTZUSTAND	zap.	22	27	39	0	75	LZM	DI	O					N	Y	N	O	Y	2	R	Y	N		N	N
3	7D2	R110	EA07	ODPOJOVAC Q7	SCHALTZUSTAND	vyp.	22	27	39	0	75	LZM	DI	O					N	Y	N	O	Y	2	R	Y	N		N	N
4	7D3	R110	EA07	ODPOJOVAC Q7	SCHALTZUSTAND	zap.	22	27	39	0	75	LZM	DI	O					N	Y	N	O	Y	2	R	Y	N		N	N
5	7D4																													
6	6D1																													
7	6D3	R110	EA07	ODPOJOVAC Q9	SCHALTZUSTAND	vyp.	22	27	39	0	75	LZM	DI	O					N	Y	N	O	Y	2	R	Y	N		N	N
8	6D4	R110	EA07	ODPOJOVAC Q9	SCHALTZUSTAND	zap.	22	27	39	0	75	LZM	DI	O					N	Y	N	O	Y	2	R	Y	N		N	N
9	5D1	R110	EA07	ODPOJOVAC Q1	SCHALTZUSTAND	vyp.	22	27	39	0	75	LZM	DI	O					N	Y	N	O	Y	2	R	Y	N		N	N
10	5D2	R110	EA07	ODPOJOVAC Q1	SCHALTZUSTAND	zap.	22	27	39	0	75	LZM	DI	O					N	Y	N	O	Y	2	R	Y	N		N	N
11	5D3																													
13	8FA																													
14	7F1	R110	EA07		8TK PORUCHA	KON ZAC	22	27	0	39	75	PV	SI	R/C	Y	R/C	Y	1	N	N					R/C	Y	N	N		N
15	7F2	R110	EA07		VYPN.VYPINAC.BEZ POVELU	KON ZAC	22	27	0	39	75	PV	TR	O	Y	O	Y	1	N	N					R	Y	N			N
16	7F3	R110	EA07		PREVADZKA S1	KON ZAC	22	27	0	39	75	PV	SI	R/C	Y	R/C	Y	1	N	Y		N	N		R/C	Y	N	N		N
17	7F4	R110	EA07		S5 POLOHA VYPN./MIESTNE	KON ZAC	22	27	0	39	75	PV	SI	R/C	Y	R/C	Y	1	N	Y		N	N		R/C	Y	N	N		N
18	6F1	R110	EA07		CHYBA OBSLUHY	KON ZAC	22	27	0	39	75	PV	SI	R/C	N				N	N					R/C	Y	N	N		N
19	6F3	R110	EA07		PREKROCENIE CASU BEHU	KON ZAC	22	27	0	39	75	PV	SI	R/C	N				N	N					R/C	Y	N	N		N
20	6F4	R110	EA07		PORUCHA VYPINACA	KON ZAC	22	27	0	39	75	PV	SI	R/C	Y	R/C	Y	1	N	N					R/C	N	Y	N		N
21	5F1	R110	EA07		STRATA js./st. NAPATI	KON ZAC	22	27	0	39	75	PV	SI	R/C	Y	R/C	Y	1	N	N					R/C	N	Y	N		N
22	5F2	R110	EA07		PORUCHA FREKVENC.OCHR.	KON ZAC	22	27	0	39	75	PV	SI	R/C	Y	R/C	Y	1	N	N					R/C	N	Y	N		N
23	5F3	R110	EA07		POSOB. FREKVENC.OCHR.	KON ZAC	22	27	0	39	75	PV	TR	O	Y	O	Y	1	N	N					R	N	Y			N

Documentation structur: Standard
Source file: K0050722.ODA

Rev.	Remarks	Date	Name	Norm

Date 22.07.2005
Drawn LANG
Appr.

VSZ KOSICE
Orig./Repl. 1/Repl. by

SIEMENS AG
ISAIOOLS

Substation control system 6MB
Compact I/O unit:
Indications
Table

T = /BG 40
+
-S106
Page 40

Proprietary data, company confidential. All rights reserved.
Confiança de secreto de empresa. Tous droits réservés.
Comunicado como segredo empresarial. Reservados todos os direitos.
Confidato como secreto industrial. Nos reservamos todos los derechos.
The reproduction, transmission or use of this document or its contents is not permitted without express written authority. Offenders will be liable for damages. All rights, including rights created by patent grant or registration of a utility model or design, are reserved.

Station: UW KOSICE
Device: EA07 EAG
Device type: 6MB5220-1
Packet numbe 8
Version no.: 1

Connection:
Device: LZG
Subrack: LZG-BGT
Module: AST 1
UART: 2
MUX: 7

General definitions:

Rated auxiliary voltage:	60 V, 110 V, 125 V DC
LZG monitoring:	Indication
Ext. met. value tr. comm.:	No
LIVE contact:	No
Buffer type:	I/O unit normal
Timeout monitoring:	Yes

Scan cycle for ind. input:

Scan cycle for fault ind.:	10
Scan number 02:	10
Scan cycle for pos. ind.:	100
Scan number 03:	3
Scan cycle for op. ind.:	1000
Scan number 04:	1

Specifications for chatter dis

Analog interval in s:
Blockage time in s:
Number of test cycle
Number of block. cyc

Input	Connect designation	Monitored as feedback	Checkback monit. time in s	Command derivation	Indication derivation	Remote transmission FP: Master station	Name of telegram	Name of info element
1	8D4	Y	20.0			IEC 870-5-101	Meldungstelegramm DM	362
2	7D1	Y	20.0			IEC 870-5-101	Meldungstelegramm DM	362
3	7D2	Y	20.0			IEC 870-5-101	Meldungstelegramm DM	363
4	7D3	Y	20.0			IEC 870-5-101	Meldungstelegramm DM	363
5	7D4							
6	6D1							
7	6D3	Y	20.0			IEC 870-5-101	Meldungstelegramm DM	365
8	6D4	Y	20.0			IEC 870-5-101	Meldungstelegramm DM	365
9	5D1	Y	20.0			IEC 870-5-101	Meldungstelegramm DM	361
10	5D2	Y	20.0			IEC 870-5-101	Meldungstelegramm DM	361
11	5D3							
13	8FA							
14	7F1	N		Alarm 1 (Hupenbefehl)	KVIT 8TK			
15	7F2	N		Alarm 1 (Hupenbefehl)	KVIT 8TK			
16	7F3	N		Alarm 1 (Hupenbefehl)				
17	7F4	N		Alarm 1 (Hupenbefehl)				
18	6F1	N		Alarm 1 (Hupenbefehl)	KVIT 8TK			
19	6F3	N		Alarm 1 (Hupenbefehl)	KVIT 8TK			
20	6F4	N		Alarm 1 (Hupenbefehl)				
21	5F1	N		Alarm 1 (Hupenbefehl)				
22	5F2	N		Alarm 1 (Hupenbefehl)				
23	5F3	N		Alarm 1 (Hupenbefehl)				

Documentation structur: Standard
Source file: KO050722.ODA

Date	22.07.2005	VSZ KOSICE	SIEMENS AG ISAOOLS
Drawn	LANG		
Appr.			
Remarks	Date	Name Norm	Orig./Repl. 1/Repl. by

Substation control system 6MB
Compact I/O unit:
Indications
Table

T = /BG 41
+
-S106
Page 41

Station: UW KOSICE
Device: EA07 EAG
Device type: 6MB5220-1

Output	Connect designation	Section	Bay	Logical device	Lower limit	Value text		Column section	Column bay	Column logical device	Column information	Column value text	Type of command	Entry in event list	Entry in alarm list	Entry in SML	Display in diag. as select. field	Archive	Operational indications	SW termination time in s	Checkback monit. time in s	Interlocking type:
1	3C1/3C2	R110	EA07	ODPOJOVAC Q2	SCHALTZUSTAND	8D4	vyp.	22	27	39	0	75	DC	O		N	PV	R	Y	0.6	20.0	SCHALTGERÄT
2	3C3/3C4	R110	EA07	ODPOJOVAC Q2	SCHALTZUSTAND	8D4	zap.	22	27	39	0	75	DC	O		N	PV	R	Y	0.6	20.0	SCHALTGERÄT
3	4C1/4C2	R110	EA07	ODPOJOVAC Q7	SCHALTZUSTAND	7D2	vyp.	22	27	39	0	75	DC	O		N	PV	R	Y	0.6	20.0	SCHALTGERÄT
4	4C3/4C4	R110	EA07	ODPOJOVAC Q7	SCHALTZUSTAND	7D2	zap.	22	27	39	0	75	DC	O		N	PV	R	Y	0.6	20.0	SCHALTGERÄT
5	4D1/4D2																PV					
6	4D3/4D4																PV					
7	2D1/2D2	R110	EA07		KVITOVANIE	KON	ZAC	22	27	0	39	75	SC	O	N	N	PV	R	N	0.6		SCHALTGERÄT
9	3E1/3E2	R110	EA07	ODPOJOVAC Q9	SCHALTZUSTAND	6D3	vyp.	22	27	39	0	75	DC	O		N	PV	R	Y	0.6	20.0	SCHALTGERÄT
10	3E3/3E4	R110	EA07	ODPOJOVAC Q9	SCHALTZUSTAND	6D3	zap.	22	27	39	0	75	DC	O		N	PV	R	Y	0.6	20.0	SCHALTGERÄT
11	4E1/4E2	R110	EA07	ODPOJOVAC Q1	SCHALTZUSTAND	5D1	vyp.	22	27	39	0	75	DC	O		N	PV	R	Y	0.6	20.0	SCHALTGERÄT
12	4E3/4E4	R110	EA07	ODPOJOVAC Q1	SCHALTZUSTAND	5D1	zap.	22	27	39	0	75	DC	O		N	PV	R	Y	0.6	20.0	SCHALTGERÄT
13	4F1/4F2																PV					
14	4F3/4F4																PV					
15	2F1/2F2	R110	EA07		DEBLOKACIA BLOKOVANIA	KON	ZAC	22	27	0	39	75	SC	R/C	N	N	PV	R/C	Y			SCHALTGERÄT

Proprietary data, company confidential. All rights reserved
Confia a lita da secret dentreprise. Tous droits servis
Comunicado como segredo empresarial. Reservados todos os direitos.
Confiado como secreto industrial. Nos reservamos todos los derechos.

The reproduction, transmission or use of this document or its contents is not permitted without express written authority.
Offenders will be liable for damages. All rights, including rights created by patent grant or registration of a utility model or design, are reserved

Documentation structur: Standard
Source file: KO050722.ODA

Rev.	Remarks	Date	Name	Norm		Orig./Repl. 1/Repl. by
				Date	22.07.2005	
				Drawn	LANG	
				Appr.		

VSZ KOSICE

SIEMENS AG
ISAOOLS

Substation control system 6MB
Compact I/O unit:
Commands
Table

T = /BG 42
+
-S106
Page 42

Proprietary data, company confidential. All rights reserved.
Confidential de secret de l'entreprise. Tous droits réservés.
Comunicado como segredo empresarial. Reservados todos os direitos.
Confiado como secreto industrial. Nos reservamos todos los derechos.

The reproduction, transmission or use of this document or its contents is not permitted without express written authority. Offenders will be liable for damages. All rights, including rights created by patent grant or registration of a utility model or design, are reserved.

Station: UW KOSICE
Device: EA07 EAG
Device type: 6MB5220-1

Analog channel no.	Connect designation	Section	Bay	Logical device	Lower limit	Display value	Dimension	Zero suppression f. display in %	Text for display	Bay blockage	Thres val. for switchover in %	Process analog value in I/O uni	With live-zero monitoring	Display in diagram
1	STROM L2	R110	EA07	MESSWERTE STROM	PRUD L2	1000.00	A	1.0	PRUD L2	N	0.0	N	PV	Y
2	STROM L1	R110	EA07	MESSWERTE STROM	PRUD L1	1000.00	A	1.0	PRUD L1	N	0.0	N	PV	N
3	STROM L3	R110	EA07	MESSWERTE STROM	PRUD L3	1000.00	A	1.0	PRUD L3	N	0.0	N	PV	N
4	UL1-UL2	R110	EA07	MESSWERTE SPANNUNG	NAPATIE L1	63.50	KV	10.0	NAPATIE L1	N	0.0	N	PV	Y
5	UL1-UL3												PV	
6	UL2-UL3												PV	
7	W-LEISTUNG	R110	EA07		VYKON CINNY	190.52	MW	1.0	VYKON CINNY	N	0.0	N	PV	Y
8	B-LEISTUNG	R110	EA07		VYKON JALOVY	190.52	MVar	1.0	VYKON JALOVY	N	0.0	N	PV	Y

Documentation structur: Standard
Source file: KO050722.ODA

Date	22.07.2005	VSZ KOSICE	SIEMENS AG ISATOOLS
Drawn	LANG		
Appr.			
Remarks / Date / Name / Norm		Orig./Repl. 1/Repl. by	

Substation control system 6MB
Compact I/O unit:
Analog values
Table

T = /BG 43
+
-S106

Station: UW KOSICE
Device: EA07 EAG
Device type: 6MB5220-1

Analog channel no.	Connect designation	Archive	Analog recording	Recording mode	No. of val. to be averaged	Scan interval in s	Analog value type	Max. value of analog value	Keep non-return pointer	Calculated demand value	Derive percentage value	Derive metered value	Static limit monitoring: Filtering time in s	Lower limit 1	Indication at lower limit 1	Lower limit 2	Indication at lower limit 2	Upper limit 1	Indication at higher limit 1	Upper limit 2	Indication at higher limit 2
1	STROM L2	Y	PERM	Analog value direct		900	CUR	1200.00	PV	PV	PV	PV	0					1199.90	PRUD L2 HH1		
2	STROM L1	Y	PERM	Analog value direct		900	CUR	1200.00	PV	PV	PV	PV	0					1199.90	PRUD L1 HH1		
3	STROM L3	Y	PERM	Analog value direct		900	CUR	1200.00	PV	PV	PV	PV	0					1199.90	PRUD L3 HH1		
4	UL1-UL2	Y	PERM	Analog value direct		900	PV	76.21	PV	PV	PV	PV	0	57.15	NAPATIE L1 DH1			69.85	NAPATIE L1 HH1		
5	UL1-UL3											PV									
6	UL2-UL3											PV									
7	W-LEISTUNG	Y	PERM	Analog value direct		900	AP	228.63	PV	PV	PV	PV									
8	B-LEISTUNG	Y	PERM	Analog value direct		900	RP	228.63	PV	PV	PV	PV									

Proprietary data, company confidential. All rights reserved.
Confia a titre de secret d'entreprise. Tous droits réservés.
Comunicado como segredo empresarial. Reservados todos os direitos.
Confiado como secreto industrial. Nos reservamos todos los derechos.
The reproduction, transmission or use of this document or its contents is not permitted without express written authority.
Offenders will be liable for damages. All rights, including rights created by patent grant or registration of a utility model or design, are reserved.

Documentation structur: Standard
Source file: KO050722.ODA

Rev.	Remarks	Date	Name	Norm	Date 22.07.2005	Drawn LANG	Appr.	Orig./Repl. 1/Repl. by

VSZ KOSICE

SIEMENS AG
ISATOOLS

Substation control system 6MB
Compact I/O unit:
Analog values
Table

T = /BG 44
+
-S106
Page 44

Station: UW KOSICE
Device: EA07 EAG
Device type: 6MB5220-1

Analog channel no.	Connect designation	Teletrans. FP raw val. Master station	Name of telegram	Name of info element
1	STROM L2	IEC 870-5-101	Meßwerttelegramm	760
2	STROM L1	IEC 870-5-101	Meßwerttelegramm	761
3	STROM L3	IEC 870-5-101	Meßwerttelegramm	762
4	UL1-UL2	IEC 870-5-101	Meßwerttelegramm	763
5	UL1-UL3			
6	UL2-UL3			
7	W-LEISTUNG	IEC 870-5-101	Meßwerttelegramm	764
8	B-LEISTUNG	IEC 870-5-101	Meßwerttelegramm	765

Proprietary data, company confidential. All rights reserved.
Confie a titre de secret d'entreprise. Tous droits r,serv,s.
Comunicado como segredo empresarial. Reservados todos os direitos.
Confiado como secreto industrial. Nos reservamos todos los derechos.
The reproduction, transmission or use of this document or its is not permitted without express written authority.
Offenders will be liable for damages. All rights, including rights created by patent grant or registration of a utility model or design, are reserved

Documentation structur: Standard
Source file: KO050722.ODA

Remarks	Date	Name	Date	22.07.2005	VSZ KOSICE	SIEMENS AG ISAOOLS	Substation control system 6MB
			Drawn	LANG			Compact I/O unit:
			Appr.				Analog values
			Norm		Orig./Repl. 1/Repl. by		Table

T = /BG 45
+
-S106
Page 45

Proprietary data, company confidential. All rights reserved.
Confia a tifre da secret dentreprise. Tous droits r,serv,s.
Comunicado como segredo empresarial. Reservados todos os direitos.
Confiado como secreto industrial. Nos reservamos todos los derechos.

The reproduction, transmission or use of this document or its is not permitted without expres written authority.
Offenders will be liable for damages. All rights, including rights
created by patent grant or registration of a utility model or design, are reserved

Station: UW KOSICE
Device: EA08 EAG
Device type: 6MB5220-1
Packet numbe 8
Version no.: 1

Connection:
Device: LZG
Subrack: LZG-BGT
Module: AST 1
UART: 2
MUX: 8

General definitions:

Rated auxiliary voltage: 60 V, 110 V, 125 V DC
LZG monitoring: Indication
Ext. met. value tr. comm.: No
LIVE contact: No
Buffer type: I/O unit normal
Timeout monitoring: Yes

Scan cycle for ind. input:

Scan cycle for fault ind.: 10
Scan number 02: 10
Scan cycle for pos. ind.: 100
Scan number 03: 3
Scan cycle for op. ind.: 1000
Scan number 04: 1

Specifications for chatter dis

Analog interval in s:
Blockage time in s:
Number of test cycle
Number of block. cyc

Input	Connect designation	Section	Bay	Logical device	Lower limit	Value text	Column section	Column bay	Column logical device	Column information	Column value text	With command	Indication type	Entry in event list	Entry in alarm list	Acknowledge	Display in indication area	Indication class	Entry in SML	Display in diagram	Display of intermed. pos.	Acknowledge	Display under voltage level	Indication class	Archive	Operational indications	Protection indications	Filt. of raised & cleared	Filtering of intermed. pos.	Bay blockage
1	8D4	R110	EA08	ODPOJOVAC Q2	SCHALTZUSTAND	vyp.	22	27	39	0	75	LZM	DI	O					N	Y	N	O	Y	2	R	Y	N		N	N
2	7D1	R110	EA08	ODPOJOVAC Q2	SCHALTZUSTAND	zap.	22	27	39	0	75	LZM	DI	O					N	Y	N	O	Y	2	R	Y	N		N	N
3	7D2	R110	EA08	ODPOJOVAC Q7	SCHALTZUSTAND	vyp.	22	27	39	0	75	LZM	DI	O					N	Y	N	O	Y	2	R	Y	N		N	N
4	7D3	R110	EA08	ODPOJOVAC Q7	SCHALTZUSTAND	zap.	22	27	39	0	75	LZM	DI	O					N	Y	N	O	Y	2	R	Y	N		N	N
5	7D4	R110	EA08	VYPINAC Q0	SCHALTZUSTAND	vyp.	22	27	39	0	75	LZM	DI	O					N	Y	N	O	Y	2	R	Y	N		N	N
6	6D1	R110	EA08	VYPINAC Q0	SCHALTZUSTAND	zap.	22	27	39	0	75	LZM	DI	O					N	Y	N	O	Y	2	R	Y	N		N	N
7	6D3	R110	EA08	ODPOJOVAC Q9	SCHALTZUSTAND	vyp.	22	27	39	0	75	LZM	DI	O					N	Y	N	O	Y	2	R	Y	N		N	N
8	6D4	R110	EA08	ODPOJOVAC Q9	SCHALTZUSTAND	zap.	22	27	39	0	75	LZM	DI	O					N	Y	N	O	Y	2	R	Y	N		N	N
9	5D1	R110	EA08	ODPOJOVAC Q1	SCHALTZUSTAND	vyp.	22	27	39	0	75	LZM	DI	O					N	Y	N	O	Y	2	R	Y	N		N	N
10	5D2	R110	EA08	ODPOJOVAC Q1	SCHALTZUSTAND	zap.	22	27	39	0	75	LZM	DI	O					N	Y	N	O	Y	2	R	Y	N		N	N
11	5D3																													
13	8FA																													
14	7F1	R110	EA08		8TK PORUCHA	KON ZAC	22	27	0	39	75	PV	SI	R/C	Y	R/C	Y	1	N	N					R/C	Y	N	N		N
15	7F2	R110	EA08		VYPN.VYPINAC.BEZ POVELU	KON ZAC	22	27	0	39	75	PV	TR	O	Y	O	Y	1	N	N					R	Y	N			N
16	7F3	R110	EA08		PREVADZKA S1	KON ZAC	22	27	0	39	75	PV	SI	R/C	Y	R/C	Y	1	N	Y		N	N		R/C	Y	N	N		N
17	7F4	R110	EA08		S5 POLOHA VYPN./MIESTNE	KON ZAC	22	27	0	39	75	PV	SI	R/C	Y	R/C	Y	1	N	Y		N	N		R/C	Y	N	N		N
18	6F1	R110	EA08		CHYBA OBSLUHY	KON ZAC	22	27	0	39	75	PV	SI	R/C	N				N	N					R/C	Y	N	N		N
19	6F3	R110	EA08		PREKROCENIE CASU BEHU	KON ZAC	22	27	0	39	75	PV	SI	R/C	N				N	N					R/C	Y	N	N		N
20	6F4	R110	EA08		PORUCHA VYPINACA	KON ZAC	22	27	0	39	75	PV	SI	R/C	Y	R/C	Y	1	N	N					R/C	N	Y	N		N
21	5F1	R110	EA08		STRATA js./st. NAPATI	KON ZAC	22	27	0	39	75	PV	SI	R/C	Y	R/C	Y	1	N	N					R/C	N	Y	N		N
22	5F2	R110	EA08		RUCNE VYPN. VYPINACA	KON ZAC	22	27	0	39	75	PV	TR	O	Y	O	Y	1	N	N					R	N	Y			N
23	5F3	R110	EA08		PORUCHA TRANSF. T102	KON ZAC	22	27	0	39	75	PV	SI	R/C	Y	R/C	Y	1	N	N					R/C	N	Y	N		N

Documentation structur: Standard
Source file: KO050722.ODA

Rev.	Remarks	Date	Name	Norm	
				Date	22.07.2005
				Drawn	LANG
				Appr.	
				Orig./Repl. 1/Repl. by	

VSZ KOSICE

SIEMENS AG
ISAOOLS

Substation control system 6MB
Compact I/O unit:
Indications
Table

T = /BG 46
+
-S106
Page 46

Proprietary data, company confidential. All rights reserved.
Confie a titre de secret d'entreprise. Tous droits r,serv,s.
Comunicado como segredo empresarial. Reservados todos os direitos.
Confiado como secreto industrial. Nos reservamos todos los derechos.

The reproduction, transmission or use of this document or its is not permitted without express written authority.
Offenders will be liable for damages. All rights, including rights created by patent grant or registration of a utility model or design, are reserved

Documentation structur: Standard
Source file: KO050722.ODA

Station: UW KOSICE
Device: EA08 EAG
Device type: 6MB5220-1
Packet numbe 8
Version no.: 1

Connection:
Device: LZG
Subrack: LZG-BGT
Module: AST 1
UART: 2
MUX: 8

General definitions:
Rated auxiliary voltage: 60 V, 110 V, 125 V DC
LZG monitoring: Indication
Ext. met. value tr. comm.: No
LIVE contact: No
Buffer type: I/O unit normal
Timeout monitoring: Yes

Scan cycle for ind. input:
Scan cycle for fault ind.: 10
Scan number 02: 10
Scan cycle for pos. ind.: 100
Scan number 03: 3
Scan cycle for op. ind.: 1000
Scan number 04: 1

Specifications for chatter dis
Analog interval in s:
Blockage time in s:
Number of test cycle
Number of block. cyc

Input	Connect designation	Monitored as feedback	Checkback monit. time in s	Command derivation	Indication derivation	Remote transmission FP: Master station	Name of telegram	Name of info element
1	8D4	Y	20.0			IEC 870-5-101	Meldungstelegramm DM	372
2	7D1	Y	20.0			IEC 870-5-101	Meldungstelegramm DM	372
3	7D2	Y	20.0			IEC 870-5-101	Meldungstelegramm DM	373
4	7D3	Y	20.0			IEC 870-5-101	Meldungstelegramm DM	373
5	7D4	Y	1.0			IEC 870-5-101	Meldungstelegramm DM	370
6	6D1	Y	1.0			IEC 870-5-101	Meldungstelegramm DM	370
7	6D3	Y	20.0			IEC 870-5-101	Meldungstelegramm DM	375
8	6D4	Y	20.0			IEC 870-5-101	Meldungstelegramm DM	375
9	5D1	Y	20.0			IEC 870-5-101	Meldungstelegramm DM	371
10	5D2	Y	20.0			IEC 870-5-101	Meldungstelegramm DM	371
11	5D3							
13	8FA							
14	7F1	N		Alarm 1 (Hupenbefehl)	KVIT 8TK			
15	7F2	N		Alarm 1 (Hupenbefehl)	KVIT 8TK			
16	7F3	N		Alarm 1 (Hupenbefehl)				
17	7F4	N		Alarm 1 (Hupenbefehl)				
18	6F1	N		Alarm 1 (Hupenbefehl)	KVIT 8TK			
19	6F3	N		Alarm 1 (Hupenbefehl)	KVIT 8TK			
20	6F4	N		Alarm 1 (Hupenbefehl)				
21	5F1	N		Alarm 1 (Hupenbefehl)				
22	5F2	N		Alarm 1 (Hupenbefehl)				
23	5F3	N		Alarm 1 (Hupenbefehl)				

Remarks	Date	Name	Date	22.07.2005	VSZ KOSICE	SIEMENS AG ISAOOLS	Substation control system 6MB
			Drawn	LANG			Compact I/O unit:
			Appr.				Indications
			Norm		Orig./Repl. 1/Repl. by		Table

T = /BG 47
+
-S106
Page 47

Station: UW KOSICE
Device: EA08 EAG
Device type: 6MB5220-1

	Output	Connect designation	Section	Bay	Logical device	Lower limit	Value text		Column section	Column bay	Column logical device	Column information	Column value text	Type of command	Entry in event list	Entry in alarm list	Entry in SML	Display in diag. as select. field	Archive	Operational indications	SW termination time in s	Checkback monit. time in s	Interlocking type:
1	3C1/3C2	R110	EA08	ODPOJOVAC Q2	SCHALTZUSTAND	8D4	vyp.	22	27	39	0	75	DC	O		N	PV	R	Y	0.6	20.0	SCHALTGERÄT
2	3C3/3C4	R110	EA08	ODPOJOVAC Q2	SCHALTZUSTAND	8D4	zap.	22	27	39	0	75	DC	O		N	PV	R	Y	0.6	20.0	SCHALTGERÄT
3	4C1/4C2	R110	EA08	ODPOJOVAC Q7	SCHALTZUSTAND	7D2	vyp.	22	27	39	0	75	DC	O		N	PV	R	Y	0.6	20.0	SCHALTGERÄT
4	4C3/4C4	R110	EA08	ODPOJOVAC Q7	SCHALTZUSTAND	7D2	zap.	22	27	39	0	75	DC	O		N	PV	R	Y	0.6	20.0	SCHALTGERÄT
5	4D1/4D2	R110	EA08	VYPINAC Q0	SCHALTZUSTAND	7D4	vyp.	22	27	39	0	75	DC	O		N	PV	R	Y	0.6	1.0	SCHALTGERÄT
6	4D3/4D4	R110	EA08	VYPINAC Q0	SCHALTZUSTAND	7D4	zap.	22	27	39	0	75	DC	O		N	PV	R	Y	0.6	1.0	SCHALTGERÄT
7	2D1/2D2	R110	EA08		KVITOVANIE	KON	ZAC	22	27	0	39	75	SC	O	N	N	PV	R	N	0.6		SCHALTGERÄT
9	3E1/3E2	R110	EA08	ODPOJOVAC Q9	SCHALTZUSTAND	6D3	vyp.	22	27	39	0	75	DC	O		N	PV	R	Y	0.6	20.0	SCHALTGERÄT
10	3E3/3E4	R110	EA08	ODPOJOVAC Q9	SCHALTZUSTAND	6D3	zap.	22	27	39	0	75	DC	O		N	PV	R	Y	0.6	20.0	SCHALTGERÄT
11	4E1/4E2	R110	EA08	ODPOJOVAC Q1	SCHALTZUSTAND	5D1	vyp.	22	27	39	0	75	DC	O		N	PV	R	Y	0.6	20.0	SCHALTGERÄT
12	4E3/4E4	R110	EA08	ODPOJOVAC Q1	SCHALTZUSTAND	5D1	zap.	22	27	39	0	75	DC	O		N	PV	R	Y	0.6	20.0	SCHALTGERÄT
13	4F1/4F2																PV					
14	4F3/4F4																PV					
15	2F1/2F2	R110	EA08		DEBLOKACIA BLOKOVANIA	KON	ZAC	22	27	0	39	75	SC	R/C	N	N	PV	R/C	Y			SCHALTGERÄT

Proprietary data, company confidential. All rights reserved.
Confia a tfire da secret dentreprise. Tous dckts rservs.
Comunicado como segredo empresarial. Reservados todos os direitos.
Confiado como secreto industrial. Nos reservamos todos los derechos.

The reproduction, transmission or use of this document or its is not permitted without expres written authority.
Offenders will be liable for damages. All rights, including rights created by patent grant or registration of a utility model or design, are reserved.

Documentation structur: Standard
Source file: KO050722.ODA

Rev.	Remarks	Date	Name	Norm	Date	22.07.2005	VSZ KOSICE	SIEMENS AG ISAOOLS	Substation control system 6MB Compact I/O unit: Commands Table
					Drawn	LANG			
					Appr.				
					Orig./Repl. 1/Repl. by				

T = /BG 48
+
-S106
Page 48

Station: UW KOSICE
Device: EA08 EAG
Device type: 6MB5220-1

Analog channel no.	Connect designation	Section	Bay	Logical device	Lower limit	Display value	Dimension	Zero suppression f. display in %	Text for display	Bay blockage	Thres val. for switchover in %	Process analog value in I/O uni	With live-zero monitoring	Display in diagram	Archive	Analog recording	Recording mode	No. of val. to be averaged	Scan interval in s	Analog value type	Max. value of analog value	Keep non-return pointer	Calculated demand value
1	STROM L2	R110	EA08	MESSWERTE STROM	PRUD L2	200.00	A	1.0	PRUD L2	N	0.0	N	PV	Y	Y	PERM	Analog value direct		900	CUR	240.00	PV	PV
2	STROM L1	R110	EA08	MESSWERTE STROM	PRUD L1	200.00	A	1.0	PRUD L1	N	0.0	N	PV	N	Y	PERM	Analog value direct		900	CUR	240.00	PV	PV
3	STROM L3	R110	EA08	MESSWERTE STROM	PRUD L3	200.00	A	1.0	PRUD L3	N	0.0	N	PV	N	Y	PERM	Analog value direct		900	CUR	240.00	PV	PV
4	UL1-UL2												PV										
5	UL1-UL3												PV										
6	UL2-UL3												PV										
7	W-LEISTUNG												PV										
8	B-LEISTUNG												PV										

Proprietary data, company confidential. All rights reserved
Confia a title de secret d'entreprise. Tous droits reservs.
Comunicado como segredo empresarial. Reservados todos os direitos.
Confiado como secreto industrial. Nos reservamos todos los derechos.

The reproduction, transmission or use of this document or its is not permitted without expres written authority.
Offenders will be liable for damages. All rights, including rights
created by patent grant or registration of a utility model or design, are reserved

Documentation structur: Standard
Source file: KO050722.ODA

Date	22.07.2005	VSZ KOSICE	SIEMENS AG ISAOOLS	Substation control system 6MB	T = /BG 49
Drawn	LANG			Compact I/O unit:	+
Appr.				Analog values	-S106 Page 9
Remarks	Date	Name Norm	Orig./Repl. 1/Repl. by	Table	

Station: UW KOSICE
Device: EA08 EAG
Device type: 6MB5220-1

Analog channel no.	Connect designation	Derive percentage value	Derive metered value	Static limit monitoring: Filtering time in s	Lower limit 1	Indication at lower limit 1	Lower limit 2	Indication at lower limit 2	Upper limit 1	Indication at higher limit 1	Upper limit 2	Indication at higher limit 2	Teletrans. FP raw val. Master station	Name of telegram	Name of info element
1	STROM L2	PV	PV	0					239.90	PRUD L2 HH1			IEC 870-5-101	Meßwerttelegramm	770
2	STROM L1	PV	PV	0					239.90	PRUD L1 HH1			IEC 870-5-101	Meßwerttelegramm	771
3	STROM L3	PV	PV	0					239.90	PRUD L3 HH1			IEC 870-5-101	Meßwerttelegramm	772
4	UL1-UL2		PV												
5	UL1-UL3		PV												
6	UL2-UL3		PV												
7	W-LEISTUNG		PV												
8	B-LEISTUNG		PV												

Proprietary data, company confidential. All rights reserved.
Confia a tire de secret d'entreprise. Tous droits r.serv.s.
Comunicado como segredo empresarial. Reservados todos os direitos.
Confiado como secreto industrial. Nos reservamos todos los derechos.
The reproduction, transmission or use of this document or its is not permitted without express written authority.
Offenders will be liable for damages. All rights, including rights created by patent grant or registration of a utility model or design, are reserved

Documentation structur: Standard
Source file: KO050722.ODA

Rev.	Remarks	Date	Name	Norm	Date 22.07.2005	Drawn LANG	Appr.	Orig./Repl. 1/Repl. by

VSZ KOSICE

SIEMENS AG
ISAIOOLS

Substation control system 6MB
Compact I/O unit:
Analog values
Table

T = /BG 50
+
-S106
Page 50

Proprietary data, company confidential. All rights reserved.
Confia a ltrie da secret d'entreprise. Tous droits reservs.
Comunicado como segredo empresarial. Reservados todos os direitos.
Confiado como secreto industrial. Nos reservamos todos los derechos.
The reproduction, transmission or use of this document or its contents is not permitted without express written authority. Offenders will be liable for damages. All rights, including rights created by patent grant or registration of a utility model or design, are reserved.

Station: UW KOSICE
Device: EA09 EAG
Device type: 6MB5220-1
Packet numbe 8
Version no.: 1

Connection:
Device: LZG
Subrack: LZG-BGT
Module: AST 1
UART: 2
MUX: 9

General definitions:
Rated auxiliary voltage: 60 V, 110 V, 125 V DC
LZG monitoring: Indication
Ext. met. value tr. comm.: No
LIVE contact: No
Buffer type: I/O unit normal
Timeout monitoring: Yes

Scan cycle for ind. input:
Scan cycle for fault ind.: 10
Scan number 02: 10
Scan cycle for pos. ind.: 100
Scan number 03: 3
Scan cycle for op. ind.: 1000
Scan number 04: 1

Specifications for chatter dis
Analog interval in s:
Blockage time in s:
Number of test cycle
Number of block. cyc

Input	Connect designation	Section	Bay	Logical device	Lower limit	Value text	Column section	Column bay	Column logical device	Column information	Column value text	With command	Indication type	Entry in event list	Entry in alarm list	Acknowledge	Display in indication area	Indication class	Entry in SML	Display in diagram	Display of intermed. pos.	Acknowledge	Display under voltage level	Indication class	Archive	Operational indications	Protection indications
1	8D4	R110	EA09	ODPOJOVAC Q2	SCHALTZUSTAND	vyp.	22	27	39	0	75	LZM	DI	O					N	Y	N	O	Y	2	R	Y	N
2	7D1	R110	EA09	ODPOJOVAC Q2	SCHALTZUSTAND	zap.	22	27	39	0	75	LZM	DI	O					N	Y	N	O	Y	2	R	Y	N
3	7D2	R110	EA09	ODPOJOVAC Q7	SCHALTZUSTAND	vyp.	22	27	39	0	75	LZM	DI	O					N	Y	N	O	Y	2	R	Y	N
4	7D3	R110	EA09	ODPOJOVAC Q7	SCHALTZUSTAND	zap.	22	27	39	0	75	LZM	DI	O					N	Y	N	O	Y	2	R	Y	N
5	7D4																										
6	6D1																										
7	6D3	R110	EA09	ODPOJOVAC Q9	SCHALTZUSTAND	vyp.	22	27	39	0	75	LZM	DI	O					N	Y	N	O	Y	2	R	Y	N
8	6D4	R110	EA09	ODPOJOVAC Q9	SCHALTZUSTAND	zap.	22	27	39	0	75	LZM	DI	O					N	Y	N	O	Y	2	R	Y	N
9	5D1	R110	EA09	ODPOJOVAC Q1	SCHALTZUSTAND	vyp.	22	27	39	0	75	LZM	DI	O					N	Y	N	O	Y	2	R	Y	N
10	5D2	R110	EA09	ODPOJOVAC Q1	SCHALTZUSTAND	zap.	22	27	39	0	75	LZM	DI	O					N	Y	N	O	Y	2	R	Y	N
11	5D3	R110	EA09		8TK PORUCHA	KON ZAC	22	27	0	39	75	PV	SI	R/C	Y	R/C	Y	1	N	N					R/C	Y	N
13	8FA	R110	EA09	ODPOJOVAC ZEMNIACI Q8	SCHALTZUSTAND	vyp.	22	27	39	0	75	LZM	DI	O					N	Y	N	O	Y	2	R	Y	N
14	7F1	R110	EA09	ODPOJOVAC ZEMNIACI Q8	SCHALTZUSTAND	zap.	22	27	39	0	75	LZM	DI	O					N	Y	N	O	Y	2	R	Y	N
15	7F2	R110	EA09		VYPN.VYPINAC.BEZ POVELU	KON ZAC	22	27	0	39	75	PV	TR	O	Y	O	Y	1	N	N					R	Y	N
16	7F3	R110	EA09		PREVADZKA S1	KON ZAC	22	27	0	39	75	PV	SI	R/C	Y	R/C	Y	1	N	Y		N	N		R/C	Y	N
17	7F4	R110	EA09		S5 POLOHA VYPN./MIESTNE	KON ZAC	22	27	0	39	75	PV	SI	R/C	Y	R/C	Y	1	N	Y		N	N		R/C	Y	N
18	6F1	R110	EA09		CHYBA OBSLUHY	KON ZAC	22	27	0	39	75	PV	SI	R/C	N				N	N					R/C	Y	N
19	6F3	R110	EA09		PREKROCENIE CASU BEHU	KON ZAC	22	27	0	39	75	PV	SI	R/C	N				N	N					R/C	Y	N
20	6F4	R110	EA09		PORUCHA VYPINACA	KON ZAC	22	27	0	39	75	PV	SI	R/C	Y	R/C	Y	1	N	N					R/C	N	Y
21	5F1	R110	EA09		STRATA js./st. NAPATI	KON ZAC	22	27	0	39	75	PV	SI	R/C	Y	R/C	Y	1	N	N					R/C	N	Y
22	5F2																										
23	5F3																										

Documentation structur: Standard
Source file: KO050722.ODA

Date	22.07.2005	VSZ KOSICE	SIEMENS AG ISAOOLS	Substation control system 6MB Compact I/O unit: Indications Table
Drawn	LANG			
Appr.				
Remarks	Date	Name Norm	Orig./Repl. 1/Repl. by	

T = /BG 51
+
-S106
Page

Proprietary data, company confidential. All rights reserved
Confiado a terceiros da secret de entreprise. Tous droits r.servis.
Comunicado como segredo empresarial. Reservados todos os direitos.
Confiado como secreto industrial. Nos reservamos todos los derechos.
The reproduction, transmission or use of this document or its contents is not permitted without expres written authority. Offenders will be liable for damages. All rights, including rights created by patent grant or registration of a utility model or design, are reserved.

Documentation structur: Standard
Source file: KO050722.ODA

Station: UW KOSICE
Device: EA09 EAG
Device type: 6MB5220-1
Packet numbe 8
Version no.: 1

Connection:
Device: LZG
Subrack: LZG-BGT
Module: AST 1
UART: 2
MUX: 9

General definitions:

Rated auxiliary voltage:	60 V, 110 V, 125 V DC
LZG monitoring:	Indication
Ext. met. value tr. comm.:	No
LIVE contact:	No
Buffer type:	I/O unit normal
Timeout monitoring:	Yes

Scan cycle for ind. input:

Scan cycle for fault ind.:	10
Scan number 02:	10
Scan cycle for pos. ind.:	100
Scan number 03:	3
Scan cycle for op. ind.:	1000
Scan number 04:	1

Specifications for chatter dis

Analog interval in s:
Blockage time in s:
Number of test cycle
Number of block. cyc

Input	Connect designation	Filt. of raised & cleared	Filtering of intermed. pos.	Bay blockage	Monitored as feedback	Checkback monit. time in s	Command derivation	Indication derivation	Remote transmission FP: Master station	Name of telegram	Name of info element
1	8D4		N	N	Y	20.0			IEC 870-5-101	Meldungstelegramm DM	382
2	7D1		N	N	Y	20.0			IEC 870-5-101	Meldungstelegramm DM	382
3	7D2		N	N	Y	20.0			IEC 870-5-101	Meldungstelegramm DM	383
4	7D3		N	N	Y	20.0			IEC 870-5-101	Meldungstelegramm DM	383
5	7D4										
6	6D1										
7	6D3		N	N	Y	20.0			IEC 870-5-101	Meldungstelegramm DM	385
8	6D4		N	N	Y	20.0			IEC 870-5-101	Meldungstelegramm DM	385
9	5D1		N	N	Y	20.0			IEC 870-5-101	Meldungstelegramm DM	381
10	5D2		N	N	Y	20.0			IEC 870-5-101	Meldungstelegramm DM	381
11	5D3	N		N	N		Alarm 1 (Hupenbefehl)	KVIT 8TK			
13	8FA		N	N	Y	20.0			IEC 870-5-101	Meldungstelegramm DM	384
14	7F1		N	N	Y	20.0			IEC 870-5-101	Meldungstelegramm DM	384
15	7F2			N	N		Alarm 1 (Hupenbefehl)	KVIT 8TK			
16	7F3	N		N	N		Alarm 1 (Hupenbefehl)				
17	7F4	N		N	N		Alarm 1 (Hupenbefehl)				
18	6F1	N		N	N		Alarm 1 (Hupenbefehl)	KVIT 8TK			
19	6F3	N		N	N		Alarm 1 (Hupenbefehl)	KVIT 8TK			
20	6F4	N		N	N		Alarm 1 (Hupenbefehl)				
21	5F1	N		N	N		Alarm 1 (Hupenbefehl)				
22	5F2										
23	5F3										

Station: UW KOSICE
Device: EA09 EAG
Device type: 6MB5220-1

Output	Connect designation	Section	Bay	Logical device	Lower limit	Value text	Column section	Column bay	Column logical device	Column information	Column value text	Type of command	Entry in event list	Entry in alarm list	Entry in SML	Display in diag. as select. field	Archive	Operational indications	SW termination time in s	Checkback monit. time in s	Interlocking type:
1	3C1/3C2	R110	EA09	ODPOJOVAC Q2	SCHALTZUSTAND	8D4 vyp.	22	27	39	0	75	DC	O		N	PV	R	Y	0.6	20.0	SCHALTGERÄT
2	3C3/3C4	R110	EA09	ODPOJOVAC Q2	SCHALTZUSTAND	8D4 zap.	22	27	39	0	75	DC	O		N	PV	R	Y	0.6	20.0	SCHALTGERÄT
3	4C1/4C2	R110	EA09	ODPOJOVAC Q7	SCHALTZUSTAND	7D2 vyp.	22	27	39	0	75	DC	O		N	PV	R	Y	0.6	20.0	SCHALTGERÄT
4	4C3/4C4	R110	EA09	ODPOJOVAC Q7	SCHALTZUSTAND	7D2 zap.	22	27	39	0	75	DC	O		N	PV	R	Y	0.6	20.0	SCHALTGERÄT
5	4D1/4D2															PV					
6	4D3/4D4															PV					
7	2D1/2D2	R110	EA09		KVITOVANIE	KON ZAC	22	27	0	39	75	SC	O	N	N	PV	R	N	0.6		SCHALTGERÄT
9	3E1/3E2	R110	EA09	ODPOJOVAC Q9	SCHALTZUSTAND	6D3 vyp.	22	27	39	0	75	DC	O		N	PV	R	Y	0.6	20.0	SCHALTGERÄT
10	3E3/3E4	R110	EA09	ODPOJOVAC Q9	SCHALTZUSTAND	6D3 zap.	22	27	39	0	75	DC	O		N	PV	R	Y	0.6	20.0	SCHALTGERÄT
11	4E1/4E2	R110	EA09	ODPOJOVAC Q1	SCHALTZUSTAND	5D1 vyp.	22	27	39	0	75	DC	O		N	PV	R	Y	0.6	20.0	SCHALTGERÄT
12	4E3/4E4	R110	EA09	ODPOJOVAC Q1	SCHALTZUSTAND	5D1 zap.	22	27	39	0	75	DC	O		N	PV	R	Y	0.6	20.0	SCHALTGERÄT
13	4F1/4F2	R110	EA09	ODPOJOVAC ZEMNIACI Q8	SCHALTZUSTAND	8FA vyp.	22	27	39	0	75	DC	O		N	PV	R	Y	0.6	20.0	SCHALTGERÄT
14	4F3/4F4	R110	EA09	ODPOJOVAC ZEMNIACI Q8	SCHALTZUSTAND	8FA zap.	22	27	39	0	75	DC	O		N	PV	R	Y	0.6	20.0	SCHALTGERÄT
15	2F1/2F2	R110	EA09		DEBLOKACIA BLOKOVANIA	KON ZAC	22	27	0	39	75	SC	R/C	N	N	PV	R/C	Y			SCHALTGERÄT

Proprietary data, company confidential. All rights reserved.
Confie a titre de secret d'entreprise. Tous droits réservés.
Comunicado como segredo empresarial. Reservados todos os direitos.
Confiado como secreto industrial. Nos reservamos todos los derechos.
The reproduction, transmission or use of this document or its is not permitted without express written authority.
Offenders will be liable for damages. All rights, including rights created by patent grant or registration of a utility model or design, are reserved

Documentation structur: Standard
Source file: KO050722.ODA

Remarks	Date	Name	Norm	Date	22.07.2005	VSZ KOSICE	SIEMENS AG ISA TOOLS	Substation control system 6MB Compact I/O unit: Commands Table	T = /BG 53 + -S106	Page 53
				Drawn	LANG					
				Appr.						
						Orig./Repl. 1/Repl. by				

Station: UW KOSICE
Device: EA09 EAG
Device type: 6MB5220-1

Output	Connect designation	Switch interlocking	
1	3C1/3C2		
2	3C3/3C4		
3	4C1/4C2		
4	4C3/4C4		
5	4D1/4D2		
6	4D3/4D4		
7	2D1/2D2		
9	3E1/3E2		
10	3E3/3E4		
11	4E1/4E2		
12	4E3/4E4		
13	4F1/4F2	SCHALTVERRIEGELUNG Q8 bei UG1 L1	
14	4F3/4F4	SCHALTVERRIEGELUNG Q8 bei UG1 L1	
15	2F1/2F2		

Proprietary data, company confidential. All rights reserved.
Confie a titre de secret d'entreprise. Tous droits réservés.
Comunicado como segredo empresarial. Reservados todos os direitos.
Confiado como secreto industrial. Nos reservamos todos los derechos.
The reproduction, transmission or use of this document or its is not permitted without express written authority.
Offenders will be liable for damages. All rights, including rights created by patent grant or registration of a utility model or design, are reserved

Documentation structur: Standard
Source file: KO050722.ODA

Rev.	Remarks	Date	Name	Date	22.07.2005	VSZ KOSICE	SIEMENS AG ISAOOLS	Substation control system 6MB
				Drawn	LANG			Compact I/O unit:
				Appr.				Commands
				Norm		Orig./Repl. 1/Repl. by		Table

T = /BG 54
+
-S106
Page 54

Station: UW KOSICE
Device: EA09 EAG
Device type: 6MB5220-1

Analog channel no.	Connect designation	Section	Bay	Logical device	Lower limit	Display value	Dimension	Zero suppression f. display in %	Text for display	Bay blockage	Thres val. for switchover in %	Process analog value in I/O uni	With live-zero monitoring	Display in diagram
1	STROM L2	R110	EA09	MESSWERTE STROM	PRUD L2	400.00	A	1.0	PRUD L2	N	0.0	N	PV	Y
2	STROM L1	R110	EA09	MESSWERTE STROM	PRUD L1	400.00	A	1.0	PRUD L1	N	0.0	N	PV	N
3	STROM L3	R110	EA09	MESSWERTE STROM	PRUD L3	400.00	A	1.0	PRUD L3	N	0.0	N	PV	N
4	UL1-UL2	R110	EA09	MESSWERTE SPANNUNG	NAPATIE L1	63.50	KV	10.0	NAPATIE L1	N	0.0	N	PV	Y
5	UL1-UL3												PV	
6	UL2-UL3												PV	
7	W-LEISTUNG	R110	EA09		VYKON CINNY	76.20	MW	1.0	VYKON CINNY	N	0.0	N	PV	Y
8	B-LEISTUNG												PV	

Proprietary data, company confidential. All rights reserved.
Confie a titre de secret d'entreprise. Tous droits reservés.
Comunicado como segredo empresarial. Reservados todos os direitos.
Confiado como secreto industrial. Nos reservamos todos los derechos.
The reproduction, transmission or use of this document or its is not permitted without express written authority.
Offenders will be liable for damages. All rights, including rights created by patent grant or registration of a utility model or design, are reserved

Documentation structur: Standard
Source file: KO050722.ODA

Remarks	Date	Name	Date	22.07.2005
			Drawn	LANG
			Appr.	
			Norm	

VSZ
KOSICE
Orig./Repl. 1/Repl. by

SIEMENS AG
ISA TOOLS

Substation control system 6MB
Compact I/O unit:
Analog values
Table

T = /BG 55
+
-S106
Page 55

Station: UW KOSICE
Device: EA09 EAG
Device type: 6MB5220-1

Analog channel no.	Connect designation	Archive	Analog recording	Recording mode	No. of val. to be averaged	Scan interval in s	Analog value type	Max. value of analog value	Keep non-return pointer	Calculated demand value	Derive percentage value	Derive metered value	Static limit monitoring: Filtering time in s	Lower limit 1	Indication at lower limit 1	Lower limit 2	Indication at lower limit 2	Upper limit 1	Indication at higher limit 1	Upper limit 2	Indication at higher limit 2
1	STROM L2	Y	PERM	Analog value direct		900	CUR	480.00	PV	PV	PV	PV	0					479.90	PRUD L2 HH1		
2	STROM L1	Y	PERM	Analog value direct		900	CUR	480.00	PV	PV	PV	PV	0					479.90	PRUD L1 HH1		
3	STROM L3	Y	PERM	Analog value direct		900	CUR	480.00	PV	PV	PV	PV	0					479.90	PRUD L3 HH1		
4	UL1-UL2	Y	PERM	Analog value direct		900	PV	76.21	PV	PV	PV	PV	0	57.15	NAPATIE L1 DH1	44.45	NAPATIE L1 DH2	69.85	NAPATIE L1 HH1		
5	UL1-UL3											PV									
6	UL2-UL3											PV									
7	W-LEISTUNG	Y	PERM	Analog value direct		900	AP	91.45	PV	PV	PV	PV									
8	B-LEISTUNG											PV									

Proprietary data, company confidential. All rights reserved.
Confi a ltifo de secret dentreprise. Tous droits rserv.s.
Comunicado como segredo empresarial. Reservados todos os direitos.
Confiado como secreto industrial. Nos reservamos todos los derechos.
The reproduction, transmission or use of this document or its
is not permitted without expres written authority.
Offenders will be liable for damages. All rights, including rights
created by patent grant or registration of a utility model or design, are reserved

Documentation structur: Standard
Source file: KO050722.ODA

Rev.	Remarks	Date	Name	Norm

Date 22.07.2005
Drawn LANG
Appr.

VSZ
KOSICE

Orig./Repl. 1/Repl. by

SIEMENS AG
ISAOOLS

Substation control system 6MB
Compact I/O unit:
Analog values
Table

T = /BG 56
+
-S106
Page 56

Station: UW KOSICE
Device: EA09 EAG
Device type: 6MB5220-1

Analog channel no.	Connect designation	Teletrans. FP raw val. Master station	Name of telegram	Name of info element
1	STROM L2	IEC 870-5-101	Meßwerttelegramm	780
2	STROM L1	IEC 870-5-101	Meßwerttelegramm	781
3	STROM L3	IEC 870-5-101	Meßwerttelegramm	782
4	UL1-UL2	IEC 870-5-101	Meßwerttelegramm	783
5	UL1-UL3			
6	UL2-UL3			
7	W-LEISTUNG	IEC 870-5-101	Meßwerttelegramm	784
8	B-LEISTUNG			

Proprietary data, company confidential. All rights reserved.
Confie a titre de secret d'entreprise. Tous droits réservés.
Comunicado como segredo empresarial. Reservados todos os direitos.
Confiado como secreto industrial. Nos reservamos todos los derechos.
The reproduction, transmission or use of this document or its is not permitted without express written authority.
Offenders will be liable for damages. All rights, including rights created by patent grant or registration of a utility model or design, are reserved

Documentation structur: Standard
Source file: KO050722.ODA

Remarks	Date	Name	Date	22.07.2005	VSZ KOSICE	SIEMENS AG ISAOOLS	Substation control system 6MB
			Drawn	LANG			Compact I/O unit:
			Appr.				Analog values
			Norm		Orig./Repl. 1/Repl. by		Table

T = /BG 57
+
-S106
Page

Proprietary data, company confidential. All rights reserved.
Confidential de la société d'entreprise. Tous droits réservés.
Comunicado como segreto empresarial. Reservados todos os direitos.
Confiado como secreto industrial. Nos reservamos todos los derechos.

The reproduction, transmission or use of this document or its contents is not permitted without express written authority. Offenders will be liable for damages. All rights, including rights created by patent grant or registration of a utility model or design, are reserved.

Station: UW KOSICE
Device: EA10 EAG
Device type: 6MB5220-1
Packet numbe 8
Version no.: 1

Connection:
Device: LZG
Subrack: LZG-BGT
Module: AST 1
UART: 2
MUX: 10

General definitions:

Rated auxiliary voltage: 60 V, 110 V, 125 V DC
LZG monitoring: Indication
Ext. met. value tr. comm.: No
LIVE contact: No
Buffer type: I/O unit normal
Timeout monitoring: Yes

Scan cycle for ind. input:

Scan cycle for fault ind.: 10
Scan number 02: 10
Scan cycle for pos. ind.: 100
Scan number 03: 3
Scan cycle for op. ind.: 1000
Scan number 04: 1

Specifications for chatter dis

Analog interval in s:
Blockage time in s:
Number of test cycle
Number of block. cyc

Input	Connect designation	Section	Bay	Logical device	Lower limit	Value text	Column section	Column bay	Column logical device	Column information	Column value text	With command	Indication type	Entry in event list	Entry in alarm list	Acknowledge	Display in indication area	Indication class	Entry in SML	Display in diagram	Display of intermed. pos.	Acknowledge	Display under voltage level	Indication class	Archive	Operational indications	Protection indications	Filt. of raised & cleared	Filtering of intermed. pos.
1	8D4	R110	EA10	ODPOJOVAC Q2	SCHALTZUSTAND	vyp.	22	27	39	0	75	LZM	DI	O					N	Y	N	O	Y	2	R	Y	N		N
2	7D1	R110	EA10	ODPOJOVAC Q2	SCHALTZUSTAND	zap.	22	27	39	0	75	LZM	DI	O					N	Y	N	O	Y	2	R	Y	N		N
3	7D2	R110	EA10	ODPOJOVAC Q7	SCHALTZUSTAND	vyp.	22	27	39	0	75	LZM	DI	O					N	Y	N	O	Y	2	R	Y	N		N
4	7D3	R110	EA10	ODPOJOVAC Q7	SCHALTZUSTAND	zap.	22	27	39	0	75	LZM	DI	O					N	Y	N	O	Y	2	R	Y	N		N
5	7D4	R110	EA10	VYPINAC Q0	SCHALTZUSTAND	vyp.	22	27	39	0	75	LZM	DI	O					N	Y	N	O	Y	2	R	Y	N		N
6	6D1	R110	EA10	VYPINAC Q0	SCHALTZUSTAND	zap.	22	27	39	0	75	LZM	DI	O					N	Y	N	O	Y	2	R	Y	N		N
7	6D3	R110	EA10	ODPOJOVAC Q9	SCHALTZUSTAND	vyp.	22	27	39	0	75	LZM	DI	O					N	Y	N	O	Y	2	R	Y	N		N
8	6D4	R110	EA10	ODPOJOVAC Q9	SCHALTZUSTAND	zap.	22	27	39	0	75	LZM	DI	O					N	Y	N	O	Y	2	R	Y	N		N
9	5D1	R110	EA10	ODPOJOVAC Q1	SCHALTZUSTAND	vyp.	22	27	39	0	75	LZM	DI	O					N	Y	N	O	Y	2	R	Y	N		N
10	5D2	R110	EA10	ODPOJOVAC Q1	SCHALTZUSTAND	zap.	22	27	39	0	75	LZM	DI	O					N	Y	N	O	Y	2	R	Y	N		N
11	5D3																												
13	8FA																												
14	7F1	R110	EA10		8TK PORUCHA	KON ZAC	22	27	0	39	75	PV	SI	R/C	Y	R/C	Y	1	N	N					R/C	Y	N	N	
15	7F2	R110	EA10		VYPN.VYPINAC.BEZ POVELU	KON ZAC	22	27	0	39	75	PV	TR	O	Y	O	Y	1	N	N					R	Y	N		
16	7F3	R110	EA10		PREVADZKA S1	KON ZAC	22	27	0	39	75	PV	SI	R/C	Y	R/C	Y	1	N	Y		N	N		R/C	Y	N	N	
17	7F4	R110	EA10		S5 POLOHA VYPN./MIESTNE	KON ZAC	22	27	0	39	75	PV	SI	R/C	Y	R/C	Y	1	N	Y		N	N		R/C	Y	N	N	
18	6F1	R110	EA10		CHYBA OBSLUHY	KON ZAC	22	27	0	39	75	PV	SI	R/C	N				N	N					R/C	Y	N	N	
19	6F3	R110	EA10		PREKROCENIE CASU BEHU	KON ZAC	22	27	0	39	75	PV	SI	R/C	N				N	N					R/C	Y	N	N	
20	6F4	R110	EA10		PORUCHA VYPINACA	KON ZAC	22	27	0	39	75	PV	SI	R/C	Y	R/C	Y	1	N	N					R/C	N	Y	N	
21	5F1	R110	EA10		STRATA js./st. NAPATI	KON ZAC	22	27	0	39	75	PV	SI	R/C	Y	R/C	Y	1	N	N					R/C	N	Y	N	
22	5F2	R110	EA10		RUCNE VYPN. VYPINACA	KON ZAC	22	27	0	39	75	PV	TR	O	Y	O	Y	1	N	N					R	N	Y		
23	5F3	R110	EA10		STRATA NAPATI STRANA 6KV	KON ZAC	22	27	0	39	75	PV	SI	R/C	Y	R/C	Y	1	N	N					R/C	N	Y	N	

Standard
Documentation structur: KO050722.ODA
Source file:

Date	22.07.2005	VSZ KOSICE	SIEMENS AG ISAOOLS
Drawn	LANG		
Appr.			
Rev.	Remarks	Date	Name Norm

Orig./Repl. 1/Repl. by

Substation control system 6MB
Compact I/O unit:
Indications
Table

T = /BG 58
+
-S106
Page 58

Station: UW KOSICE
Device: EA10 EAG
Device type: 6MB5220-1
Packet numbe 8
Version no.: 1

Connection:
Device: LZG
Subrack: LZG-BGT
Module: AST 1
UART: 2
MUX: 10

General definitions:
Rated auxiliary voltage: 60 V, 110 V, 125 V DC
LZG monitoring: Indication
Ext. met. value tr. comm.: No
LIVE contact: No
Buffer type: I/O unit normal
Timeout monitoring: Yes

Scan cycle for ind. input:
Scan cycle for fault ind.: 10
Scan number 02: 10
Scan cycle for pos. ind.: 100
Scan number 03: 3
Scan cycle for op. ind.: 1000
Scan number 04: 1

Specifications for chatter dis
Analog interval in s:
Blockage time in s:
Number of test cycle
Number of block. cyc

Input	Connect designation	Bay blockage	Monitored as feedback	Checkback monit. time in s	Command derivation	Indication derivation	Remote transmission FP: Master station	Name of telegram	Name of info element
1	8D4	N	Y	20.0			IEC 870-5-101	Meldungstelegramm DM	392
2	7D1	N	Y	20.0			IEC 870-5-101	Meldungstelegramm DM	392
3	7D2	N	Y	20.0			IEC 870-5-101	Meldungstelegramm DM	393
4	7D3	N	Y	20.0			IEC 870-5-101	Meldungstelegramm DM	393
5	7D4	N	Y	1.0			IEC 870-5-101	Meldungstelegramm DM	390
6	6D1	N	Y	1.0			IEC 870-5-101	Meldungstelegramm DM	390
7	6D3	N	Y	20.0			IEC 870-5-101	Meldungstelegramm DM	395
8	6D4	N	Y	20.0			IEC 870-5-101	Meldungstelegramm DM	395
9	5D1	N	Y	20.0			IEC 870-5-101	Meldungstelegramm DM	391
10	5D2	N	Y	20.0			IEC 870-5-101	Meldungstelegramm DM	391
11	5D3								
13	8FA								
14	7F1	N	N		Alarm 1 (Hupenbefehl)	KVIT 8TK			
15	7F2	N	N		Alarm 1 (Hupenbefehl)	KVIT 8TK			
16	7F3	N	N		Alarm 1 (Hupenbefehl)				
17	7F4	N	N		Alarm 1 (Hupenbefehl)				
18	6F1	N	N		Alarm 1 (Hupenbefehl)	KVIT 8TK			
19	6F3	N	N		Alarm 1 (Hupenbefehl)	KVIT 8TK			
20	6F4	N	N		Alarm 1 (Hupenbefehl)				
21	5F1	N	N		Alarm 1 (Hupenbefehl)				
22	5F2	N	N		Alarm 1 (Hupenbefehl)				
23	5F3	N	N		Alarm 1 (Hupenbefehl)				

Proprietary data, company confidential. All rights reserved.
Confie a titre de secret d'entreprise. Tous droits r,serv,s.
Comunicado como segredo empresarial. Reservados todos os direitos.
Confiado como secreto industrial. Nos reservamos todos los derechos.
The reproduction, transmission or use of this document or its is not permitted without express written authority.
Offenders will be liable for damages. All rights, including rights created by patent grant or registration of a utility model or design, are reserved

Documentation structur: Standard
Source file: KO050722.ODA

Remarks	Date	Name	Norm	Date	22.07.2005	VSZ KOSICE	SIEMENS AG ISAOOLS	Substation control system 6MB Compact I/O unit: Indications Table	T = /BG 59
				Drawn	LANG				+
				Appr.					-S106
						Orig./Repl. 1/Repl. by			Page 59

Station: UW KOSICE
Device: EA10 EAG
Device type: 6MB5220-1

Output	Connect designation	Section	Bay	Logical device	Lower limit	Value text		Column section	Column bay	Column logical device	Column information	Column value text	Type of command	Entry in event list	Entry in alarm list	Entry in SML	Display in diag. as select. field	Archive	Operational indications	SW termination time in s	Checkback monit. time in s	Interlocking type:	
1	3C1/3C2	R110	EA10	ODPOJOVAC Q2	SCHALTZUSTAND	8D4	vyp.	22	27	39	0	75	DC	O		N	PV	R	Y	0.6	20.0	SCHALTGERÄT	
2	3C3/3C4	R110	EA10	ODPOJOVAC Q2	SCHALTZUSTAND	8D4	zap.	22	27	39	0	75	DC	O		N	PV	R	Y	0.6	20.0	SCHALTGERÄT	
3	4C1/4C2	R110	EA10	ODPOJOVAC Q7	SCHALTZUSTAND	7D2	vyp.	22	27	39	0	75	DC	O		N	PV	R	Y	0.6	20.0	SCHALTGERÄT	
4	4C3/4C4	R110	EA10	ODPOJOVAC Q7	SCHALTZUSTAND	7D2	zap.	22	27	39	0	75	DC	O		N	PV	R	Y	0.6	20.0	SCHALTGERÄT	
5	4D1/4D2	R110	EA10	VYPINAC Q0	SCHALTZUSTAND	7D4	vyp.	22	27	39	0	75	DC	O		N	PV	R	Y	0.6	1.0	SCHALTGERÄT	
6	4D3/4D4	R110	EA10	VYPINAC Q0	SCHALTZUSTAND	7D4	zap.	22	27	39	0	75	DC	O		N	PV	R	Y	0.6	1.0	SCHALTGERÄT	
7	2D1/2D2	R110	EA10		KVITOVANIE	KON	ZAC	22	27	0	39	75	SC	O	N	N	PV	R	N	0.6		SCHALTGERÄT	
9	3E1/3E2	R110	EA10	ODPOJOVAC Q9	SCHALTZUSTAND	6D3	vyp.	22	27	39	0	75	DC	O		N	PV	R	Y	0.6	20.0	SCHALTGERÄT	
10	3E3/3E4	R110	EA10	ODPOJOVAC Q9	SCHALTZUSTAND	6D3	zap.	22	27	39	0	75	DC	O		N	PV	R	Y	0.6	20.0	SCHALTGERÄT	
11	4E1/4E2	R110	EA10	ODPOJOVAC Q1	SCHALTZUSTAND	5D1	vyp.	22	27	39	0	75	DC	O		N	PV	R	Y	0.6	20.0	SCHALTGERÄT	
12	4E3/4E4	R110	EA10	ODPOJOVAC Q1	SCHALTZUSTAND	5D1	zap.	22	27	39	0	75	DC	O		N	PV	R	Y	0.6	20.0	SCHALTGERÄT	
13	4F1/4F2																PV						
14	4F3/4F4																PV						
15	2F1/2F2	R110	EA10		DEBLOKACIA BLOKOVANIA	KON	ZAC	22	27	0	39	75	SC	R/C	N	N	PV	R/C	Y			SCHALTGERÄT	

Proprietary data, company confidential. All rights reserved.
Confia a titre de secret d'entreprise. Tous droits réservés.
Comunicado como segredo empresarial. Reservados todos os direitos.
Confiado como secreto industrial. Nos reservamos todos los derechos.

The reproduction, transmission or use of this document or its is not permitted without express written authority.
Offenders will be liable for damages. All rights, including rights created by patent grant or registration of a utility model or design, are reserved

Documentation structur: Standard
Source file: KO050722.ODA

Rev.	Remarks	Date	Name	Date	22.07.2005
				Drawn	LANG
				Appr.	
				Norm	

VSZ
KOSICE

Orig./Repl. 1/Repl. by

SIEMENS AG
SAIOOLS

Substation control system 6MB
Compact I/O unit:
Commands
Table

T = /BG 60
+
-S106
Page 60

Station: UW KOSICE
Device: EA10 EAG
Device type: 6MB5220-1

Analog channel no.	Connect designation	Section	Bay	Logical device	Lower limit	Display value	Dimension	Zero suppression f. display in %	Text for display	Bay blockage	Thres val. for switchover in %	Process analog value in I/O uni	With live-zero monitoring	Display in diagram	Archive	Analog recording	Recording mode	No. of val. to be averaged	Scan interval in s	Analog value type	Max. value of analog value	Keep non-return pointer	Calculated demand value
1	STROM L2	R110	EA10	MESSWERTE STROM	PRUD L2	200.00	A	1.0	PRUD L2	N	0.0	N	PV	Y	Y	PERM	Analog value direct		900	CUR	240.00	PV	PV
2	STROM L1	R110	EA10	MESSWERTE STROM	PRUD L1	200.00	A	1.0	PRUD L1	N	0.0	N	PV	N	Y	PERM	Analog value direct		900	CUR	240.00	PV	PV
3	STROM L3	R110	EA10	MESSWERTE STROM	PRUD L3	200.00	A	1.0	PRUD L3	N	0.0	N	PV	N	Y	PERM	Analog value direct		900	CUR	240.00	PV	PV
4	UL1-UL2												PV										
5	UL1-UL3												PV										
6	UL2-UL3												PV										
7	W-LEISTUNG												PV										
8	B-LEISTUNG												PV										

Proprietary data, company confidential. All rights reserved.
Confie a titre de secret d'entreprise. Tous droits reservs.
Comunicado como segredo empresarial. Reservados todos os direitos.
Confiado como secreto industrial. Nos reservamos todos los derechos.

The reproduction, transmission or use of this document or its is not permitted without expres written authority.
Offenders will be liable for damages. All rights, including rights created by patent grant or registration of a utility model or design, are reserved

Documentation structur: Standard
Source file: KO050722.ODA

Remarks	Date	Name	Norm	Date	22.07.2005	VSZ KOSICE	SIEMENS AG ISAOOLS	Substation control system 6MB
				Drawn	LANG			Compact I/O unit:
				Appr.				Analog values
						Orig./Repl. 1/Repl. by		Table

T = /BG 61
+
-S106
Page

Station: UW KOSICE
Device: EA10 EAG
Device type: 6MB5220-1

Analog channel no.	Connect designation	Derive percentage value	Derive metered value	Static limit monitoring: Filtering time in s	Lower limit 1	Indication at lower limit 1	Lower limit 2	Indication at lower limit 2	Upper limit 1	Indication at higher limit 1	Upper limit 2	Indication at higher limit 2	Teletrans. FP raw val. Master station	Name of telegram	Name of info element
1	STROM L2	PV	PV	0					239.90	PRUD L2 HH1			IEC 870-5-101	Meßwerttelegramm	790
2	STROM L1	PV	PV	0					239.90	PRUD L1 HH1			IEC 870-5-101	Meßwerttelegramm	791
3	STROM L3	PV	PV	0					239.90	PRUD L3 HH1			IEC 870-5-101	Meßwerttelegramm	792
4	UL1-UL2		PV												
5	UL1-UL3		PV												
6	UL2-UL3		PV												
7	W-LEISTUNG		PV												
8	B-LEISTUNG		PV												

Proprietary data, company confidential. All rights reserved.
Confie a titre de secret d'entreprise. Tous droits r,serv,s.
Comunicado como segredo empresarial. Reservados todos os direitos.
Confiado como secreto industrial. Nos reservamos todos los derechos.

The reproduction, transmission or use of this document or its is not permitted without express written authority.
Offenders will be liable for damages. All rights, including rights created by patent grant or registration of a utility model or design, are reserved

Documentation structur: Standard
Source file: KO050722.ODA

Rev.	Remarks	Date	Name	Date	22.07.2005
				Drawn	LANG
				Appr.	
				Norm	

VSZ
KOSICE

Orig./Repl. 1/Repl. by

SIEMENS AG
ISAOOLS

Substation control system 6MB
Compact I/O unit:
Analog values
Table

T = /BG 62
+
-S106
Page 62

Station: UW KOSICE
Device: EA11 EAG
Device type: 6MB5220-1
Packet numbe 8
Version no.: 1

Connection:
Device: LZG
Subrack: LZG-BGT
Module: AST 1
UART: 2
MUX: 11

General definitions:

Rated auxiliary voltage: 60 V, 110 V, 125 V DC
LZG monitoring: Indication
Ext. met. value tr. comm.: No
LIVE contact: No
Buffer type: I/O unit normal
Timeout monitoring: Yes

Scan cycle for ind. input:

Scan cycle for fault ind.: 10
Scan number 02: 10
Scan cycle for pos. ind.: 100
Scan number 03: 3
Scan cycle for op. ind.: 1000
Scan number 04: 1

Specifications for chatter dis

Analog interval in s:
Blockage time in s:
Number of test cycle
Number of block. cyc

Input	Connect designation	Section	Bay	Logical device	Lower limit	Value text	Column section	Column bay	Column logical device	Column information	Column value text	With command	Indication type	Entry in event list	Entry in alarm list	Acknowledge	Display in indication area	Indication class	Entry in SML	Display in diagram	Display of intermed. pos.	Acknowledge	Display under voltage level	Indication class	Archive	Operational indications	Protection indications
1	8D4	R110	EA11	ODPOJOVAC Q2	SCHALTZUSTAND	vyp.	22	27	39	0	75	LZM	DI	O					N	Y	N	O	Y	2	R	Y	N
2	7D1	R110	EA11	ODPOJOVAC Q2	SCHALTZUSTAND	zap.	22	27	39	0	75	LZM	DI	O					N	Y	N	O	Y	2	R	Y	N
3	7D2	R110	EA11	ODPOJOVAC Q7	SCHALTZUSTAND	vyp.	22	27	39	0	75	LZM	DI	O					N	Y	N	O	Y	2	R	Y	N
4	7D3	R110	EA11	ODPOJOVAC Q7	SCHALTZUSTAND	zap.	22	27	39	0	75	LZM	DI	O					N	Y	N	O	Y	2	R	Y	N
5	7D4																										
6	6D1																										
7	6D3	R110	EA11	ODPOJOVAC Q9	SCHALTZUSTAND	vyp.	22	27	39	0	75	LZM	DI	O					N	Y	N	O	Y	2	R	Y	N
8	6D4	R110	EA11	ODPOJOVAC Q9	SCHALTZUSTAND	zap.	22	27	39	0	75	LZM	DI	O					N	Y	N	O	Y	2	R	Y	N
9	5D1	R110	EA11	ODPOJOVAC Q1	SCHALTZUSTAND	vyp.	22	27	39	0	75	LZM	DI	O					N	Y	N	O	Y	2	R	Y	N
10	5D2	R110	EA11	ODPOJOVAC Q1	SCHALTZUSTAND	zap.	22	27	39	0	75	LZM	DI	O					N	Y	N	O	Y	2	R	Y	N
11	5D3	R110	EA11		8TK PORUCHA	KON ZAC	22	27	0	39	75	PV	SI	R/C	Y	R/C	Y	1	N	N					R/C	Y	N
13	8FA	R110	EA11	ODPOJOVAC ZEMNIACI Q8	SCHALTZUSTAND	vyp.	22	27	39	0	75	LZM	DI	O					N	Y	N	O	Y	2	R	Y	N
14	7F1	R110	EA11	ODPOJOVAC ZEMNIACI Q8	SCHALTZUSTAND	zap.	22	27	39	0	75	LZM	DI	O					N	Y	N	O	Y	2	R	Y	N
15	7F2	R110	EA11		VYPN.VYPINAC.BEZ POVELU	KON ZAC	22	27	0	39	75	PV	TR	O	Y	O	Y	1	N	N					R	Y	N
16	7F3	R110	EA11		PREVADZKA S1	KON ZAC	22	27	0	39	75	PV	SI	R/C	Y	R/C	Y	1	N	Y		N	N		R/C	Y	N
17	7F4	R110	EA11		S5 POLOHA VYPN./MIESTNE	KON ZAC	22	27	0	39	75	PV	SI	R/C	Y	R/C	Y	1	N	Y		N	N		R/C	Y	N
18	6F1	R110	EA11		CHYBA OBSLUHY	KON ZAC	22	27	0	39	75	PV	SI	R/C	N				N	N					R/C	Y	N
19	6F3	R110	EA11		PREKROCENIE CASU BEHU	KON ZAC	22	27	0	39	75	PV	SI	R/C	N				N	N					R/C	Y	N
20	6F4	R110	EA11		PORUCHA VYPINACA	KON ZAC	22	27	0	39	75	PV	SI	R/C	Y	R/C	Y	1	N	N					R/C	N	Y
21	5F1	R110	EA11		STRATA js./st. NAPATI	KON ZAC	22	27	0	39	75	PV	SI	R/C	Y	R/C	Y	1	N	N					R/C	N	Y
22	5F2																										
23	5F3																										

Proprietary data, company confidential. All rights reserved
Confi a ttre da secret d'entreprise. Tous droits r,serv,s
Comunicado como segredo empresarial. Reservados todos os direitos.
Confiado como secreto industrial. Nos reservamos todos los derechos.
The reproduction, transmission or use of this document or its contents is not permitted without express written authority. Offenders will be liable for damages. All rights, including rights created by patent grant or registration of a utility model or design, are reserved

Documentation structur: Standard
Source file: KO050722.ODA

Remarks	Date	Name	Norm	Date 22.07.2005	Drawn LANG	Appr.	Orig./Repl. 1/Repl. by

VSZ KOSICE

SIEMENS AG
ISATOOLS

Substation control system 6MB
Compact I/O unit:
Indications
Table

T = /BG 63
+
-S106
Page 63

Proprietary data, company confidential. All rights reserved.
Confie a titre de secret d'entreprise. Tous droits reservs.
Comunicado como segredo empresarial. Reservados todos os direitos.
Confiado como secreto industrial. Nos reservamos todos los derechos.

The reproduction, transmission or use of this document or its is not permitted without express written authority.
Offenders will be liable for damages. All rights, including rights created by patent grant or registration of a utility model or design, are reserved

Documentation structur: Standard
Source file: KO050722.ODA

Station: UW KOSICE
Device: EA11 EAG
Device type: 6MB5220-1
Packet numbe 8
Version no.: 1

Connection:
Device: LZG
Subrack: LZG-BGT
Module: AST 1
UART: 2
MUX: 11

General definitions:
Rated auxiliary voltage: 60 V, 110 V, 125 V DC
LZG monitoring: Indication
Ext. met. value tr. comm.: No
LIVE contact: No
Buffer type: I/O unit normal
Timeout monitoring: Yes

Scan cycle for ind. input:
Scan cycle for fault ind.: 10
Scan number 02: 10
Scan cycle for pos. ind.: 100
Scan number 03: 3
Scan cycle for op. ind.: 1000
Scan number 04: 1

Specifications for chatter dis
Analog interval in s:
Blockage time in s:
Number of test cycle
Number of block. cyc

Input	Connect designation	Filt. of raised & cleared	Filtering of intermed. pos.	Bay blockage	Monitored as feedback	Checkback monit. time in s	Command derivation	Indication derivation	Remote transmission FP: Master station	Name of telegram	Name of info element
1	8D4		N	N	Y	20.0			IEC 870-5-101	Meldungstelegramm DM	402
2	7D1		N	N	Y	20.0			IEC 870-5-101	Meldungstelegramm DM	402
3	7D2		N	N	Y	20.0			IEC 870-5-101	Meldungstelegramm DM	403
4	7D3		N	N	Y	20.0			IEC 870-5-101	Meldungstelegramm DM	403
5	7D4										
6	6D1										
7	6D3		N	N	Y	20.0			IEC 870-5-101	Meldungstelegramm DM	405
8	6D4		N	N	Y	20.0			IEC 870-5-101	Meldungstelegramm DM	405
9	5D1		N	N	Y	20.0			IEC 870-5-101	Meldungstelegramm DM	401
10	5D2		N	N	Y	20.0			IEC 870-5-101	Meldungstelegramm DM	401
11	5D3	N		N	N		Alarm 1 (Hupenbefehl)	KVIT 8TK			
13	8FA		N	N	Y	20.0			IEC 870-5-101	Meldungstelegramm DM	404
14	7F1		N	N	Y	20.0			IEC 870-5-101	Meldungstelegramm DM	404
15	7F2			N	N		Alarm 1 (Hupenbefehl)	KVIT 8TK			
16	7F3	N		N	N		Alarm 1 (Hupenbefehl)				
17	7F4	N		N	N		Alarm 1 (Hupenbefehl)				
18	6F1	N		N	N		Alarm 1 (Hupenbefehl)	KVIT 8TK			
19	6F3	N		N	N		Alarm 1 (Hupenbefehl)	KVIT 8TK			
20	6F4	N		N	N		Alarm 1 (Hupenbefehl)				
21	5F1	N		N	N		Alarm 1 (Hupenbefehl)				
22	5F2										
23	5F3										

Rev.	Remarks	Date	Name	Date	22.07.2005	VSZ KOSICE	SIEMENS AG ISAOOLS	Substation control system 6MB
				Drawn	LANG			Compact I/O unit:
				Appr.				Indications
				Norm		Orig./Repl. 1/Repl. by		Table

T = /BG 64
+
-S106
Page 64

Station: UW KOSICE
Device: EA11 EAG
Device type: 6MB5220-1

Output	Connect designation	Section	Bay	Logical device	Lower limit	Value text	Column section	Column bay	Column logical device	Column information	Column value text	Type of command	Entry in event list	Entry in alarm list	Entry in SML	Display in diag. as select. field	Archive	Operational indications	SW termination time in s	Checkback monit. time in s	Interlocking type:
1	3C1/3C2	R110	EA11	ODPOJOVAC Q2	SCHALTZUSTAND	8D4 vyp.	22	27	39	0	75	DC	O		N	PV	R	Y	0.6	20.0	SCHALTGERÄT
2	3C3/3C4	R110	EA11	ODPOJOVAC Q2	SCHALTZUSTAND	8D4 zap.	22	27	39	0	75	DC	O		N	PV	R	Y	0.6	20.0	SCHALTGERÄT
3	4C1/4C2	R110	EA11	ODPOJOVAC Q7	SCHALTZUSTAND	7D2 vyp.	22	27	39	0	75	DC	O		N	PV	R	Y	0.6	20.0	SCHALTGERÄT
4	4C3/4C4	R110	EA11	ODPOJOVAC Q7	SCHALTZUSTAND	7D2 zap.	22	27	39	0	75	DC	O		N	PV	R	Y	0.6	20.0	SCHALTGERÄT
5	4D1/4D2															PV					
6	4D3/4D4															PV					
7	2D1/2D2	R110	EA11		KVITOVANIE	KON ZAC	22	27	0	39	75	SC	O	N	N	PV	R	N	0.6		SCHALTGERÄT
9	3E1/3E2	R110	EA11	ODPOJOVAC Q9	SCHALTZUSTAND	6D3 vyp.	22	27	39	0	75	DC	O		N	PV	R	Y	0.6	20.0	SCHALTGERÄT
10	3E3/3E4	R110	EA11	ODPOJOVAC Q9	SCHALTZUSTAND	6D3 zap.	22	27	39	0	75	DC	O		N	PV	R	Y	0.6	20.0	SCHALTGERÄT
11	4E1/4E2	R110	EA11	ODPOJOVAC Q1	SCHALTZUSTAND	5D1 vyp.	22	27	39	0	75	DC	O		N	PV	R	Y	0.6	20.0	SCHALTGERÄT
12	4E3/4E4	R110	EA11	ODPOJOVAC Q1	SCHALTZUSTAND	5D1 zap.	22	27	39	0	75	DC	O		N	PV	R	Y	0.6	20.0	SCHALTGERÄT
13	4F1/4F2	R110	EA11	ODPOJOVAC ZEMNIACI Q8	SCHALTZUSTAND	8FA vyp.	22	27	39	0	75	DC	O		N	PV	R	Y	0.6	20.0	SCHALTGERÄT
14	4F3/4F4	R110	EA11	ODPOJOVAC ZEMNIACI Q8	SCHALTZUSTAND	8FA zap.	22	27	39	0	75	DC	O		N	PV	R	Y	0.6	20.0	SCHALTGERÄT
15	2F1/2F2	R110	EA11		DEBLOKACIA BLOKOVANIA	KON ZAC	22	27	0	39	75	SC	R/C	N	N	PV	R/C	Y			SCHALTGERÄT

Proprietary data, company confidential. All rights reserved.
Confie a titre de secret d'entreprise. Tous droits réservés.
Comunicado como segredo empresarial. Reservados todos os direitos.
Confiado como secreto industrial. Nos reservamos todos los derechos.
The reproduction, transmission or use of this document or its is not permitted without express written authority.
Offenders will be liable for damages. All rights, including rights created by patent grant or registration of a utility model or design, are reserved

Documentation structur: Standard
Source file: KO050722.ODA

Remarks	Date	Name	Date	22.07.2005	VSZ KOSICE	SIEMENS AG ISAOOLS	Substation control system 6MB
			Drawn	LANG			Compact I/O unit:
			Appr.				Commands
			Norm		Orig./Repl. 1/Repl. by		Table

T = /BG 65
+
-S106
Page 65

Station: UW KOSICE
Device: EA11 EAG
Device type: 6MB5220-1

Output	Connect designation	Switch interlocking
1	3C1/3C2	
2	3C3/3C4	
3	4C1/4C2	
4	4C3/4C4	
5	4D1/4D2	
6	4D3/4D4	
7	2D1/2D2	
9	3E1/3E2	
10	3E3/3E4	
11	4E1/4E2	
12	4E3/4E4	
13	4F1/4F2	SCHALTVERRIEGELUNG Q8 bei UG1 L1
14	4F3/4F4	SCHALTVERRIEGELUNG Q8 bei UG1 L1
15	2F1/2F2	

Proprietary data, company confidential. All rights reserved
Confirm a titre de secret d'entreprise. Tous droits réservés.
Comunicado como segredo empresarial. Reservados todos os direitos.
Confiado como secreto industrial. Nos reservamos todos los derechos.
The reproduction, transmission or use of this document or its is not permitted without express written authority.
Offenders will be liable for damages. All rights, including rights created by patent grant or registration of a utility model or design, are reserved

Documentation structur: Standard
Source file: KO050722.ODA

Rev.	Remarks	Date	Name	Date	22.07.2005	VSZ KOSICE	SIEMENS AG ISAOOLS	Substation control system 6MB
				Drawn	LANG			Compact I/O unit:
				Appr.				Commands
				Norm		Orig./Repl. 1/Repl. by		Table

T = /BG 66
+
-S106
Page 66

Station: UW KOSICE
Device: EA11 EAG
Device type: 6MB5220-1

Analog channel no.	Connect designation	Section	Bay	Logical device	Lower limit	Display value	Dimension	Zero suppression f. display in %	Text for display	Bay blockage	Thres val. for switchover in %	Process analog value in I/O uni	With live-zero monitoring	Display in diagram
1	STROM L2	R110	EA11	MESSWERTE STROM	PRUD L2	600.00	A	1.0	PRUD L2	N	0.0	N	PV	Y
2	STROM L1	R110	EA11	MESSWERTE STROM	PRUD L1	600.00	A	1.0	PRUD L1	N	0.0	N	PV	N
3	STROM L3	R110	EA11	MESSWERTE STROM	PRUD L3	600.00	A	1.0	PRUD L3	N	0.0	N	PV	N
4	UL1-UL2	R110	EA11	MESSWERTE SPANNUNG	NAPATIE L1	63.50	KV	10.0	NAPATIE L1	N	0.0	N	PV	Y
5	UL1-UL3												PV	
6	UL2-UL3												PV	
7	W-LEISTUNG	R110	EA11		VYKON CINNY	114.31	MW	1.0	VYKON CINNY	N	0.0	N	PV	Y
8	B-LEISTUNG												PV	

Proprietary data, company confidential. All rights reserved.
Confie a titre de secret d'entreprise. Tous droits reservés.
Comunicado como segredo empresarial. Reservados todos os direitos.
Confiado como secreto industrial. Nos reservamos todos los derechos.

The reproduction, transmission or use of this document or its is not permitted without express written authority.
Offenders will be liable for damages. All rights, including rights created by patent grant or registration of a utility model or design, are reserved

Documentation structur: Standard
Source file: KO050722.ODA

			Date	22.07.2005	VSZ KOSICE	SIEMENS AG ISAOOLS	Substation control system 6MB
			Drawn	LANG			Compact I/O unit:
			Appr.				Analog values
F	Remarks	Date	Name	Norm	Orig./Repl. 1/Repl. by		Table

T = /BG 67
+
-S106
Page

Station: UW KOSICE
Device: EA11 EAG
Device type: 6MB5220-1

Analog channel no.	Connect designation	Archive	Analog recording	Recording mode	No. of val. to be averaged	Scan interval in s	Analog value type	Max. value of analog value	Keep non-return pointer	Calculated demand value	Derive percentage value	Derive metered value	Static limit monitoring: Filtering time in s	Lower limit 1	Indication at lower limit 1	Lower limit 2	Indication at lower limit 2	Upper limit 1	Indication at higher limit 1	Upper limit 2	Indication at higher limit 2
1	STROM L2	Y	PERM	Analog value direct		900	CUR	720.00	PV	PV	PV	PV	0					719.90	PRUD L2 HH1		
2	STROM L1	Y	PERM	Analog value direct		900	CUR	720.00	PV	PV	PV	PV	0					719.90	PRUD L1 HH1		
3	STROM L3	Y	PERM	Analog value direct		900	CUR	720.00	PV	PV	PV	PV	0					719.90	PRUD L3 HH1		
4	UL1-UL2	Y	PERM	Analog value direct		900	PV	76.21	PV	PV	PV	PV	0	57.15	NAPATIE L1 DH1	44.45	NAPATIE L1 DH2	69.85	NAPATIE L1 HH1		
5	UL1-UL3											PV									
6	UL2-UL3											PV									
7	W-LEISTUNG	Y	PERM	Analog value direct		900	AP	137.17	PV	PV	PV	LZM									
8	B-LEISTUNG											PV									

Proprietary data, company confidential. All rights reserved.
Confiar a titre da secret d'entreprise. Tous droits r,serv,s.
Comunicado como segredo empresarial. Reservados todos os direitos.
Confiado como secreto industrial. Nos reservamos todos los derechos.

The reproduction, transmission or use of this document or its is not permitted without express written authority.
Offenders will be liable for damages. All rights, including rights created by patent grant or registration of a utility model or design, are reserved

Documentation structur: Standard
Source file: KO050722.ODA

Rev.	Remarks	Date	Name	Date	22.07.2005
				Drawn	LANG
				Appr.	
				Norm	

VSZ
KOSICE

Orig./Repl. 1/Repl. by

SIEMENS AG
SAOOLS

Substation control system 6MB
Compact I/O unit:
Analog values
Table

T = /BG 68
+
-S106
Page 68

Station: UW KOSICE
Device: EA11 EAG
Device type: 6MB5220-1

Analog channel no.	Connect designation	Teletrans. FP raw val. Master station	Name of telegram	Name of info element
1	STROM L2	IEC 870-5-101	Meßwerttelegramm	800
2	STROM L1	IEC 870-5-101	Meßwerttelegramm	801
3	STROM L3	IEC 870-5-101	Meßwerttelegramm	802
4	UL1-UL2	IEC 870-5-101	Meßwerttelegramm	803
5	UL1-UL3			
6	UL2-UL3			
7	W-LEISTUNG	IEC 870-5-101	Meßwerttelegramm	804
8	B-LEISTUNG			

Proprietary data, company confidential. All rights reserved.
Confia a être de secret d'entreprise. Tous droits réservés.
Comunicado como segredo empresarial. Reservados todos os direitos.
Confiado como secreto industrial. Nos reservamos todos los derechos.

The reproduction, transmission or use of this document or its contents is not permitted without express written authority. Offenders will be liable for damages. All rights, including rights created by patent grant or registration of a utility model or design, are reserved.

Documentation structure: Standard
Source file: KO050722.00A

Remarks	Date	Name	Norm	
			Date	22.07.2005
			Drawn	LANG
			Appr.	

VSZ KOSICE

Orig./Repl. 1/Repl. by

SIEMENS AG
ISAOOLS

Substation control system 6MB
Compact I/O unit:
Analog values
Table

T = /BG 69
+
-S106
Page 29

Proprietary data, company confidential. All rights reserved.
Confia a tina de secret d'enteprise. Tous droits reservs.
Comunicado como segredo empresarial. Reservados todos os direitos.
Confiado como secreto industrial. Nos reservamos todos los derechos.

The reproduction, transmission or use of this document or its contents is not permitted without express written authority. Offenders will be liable for damages. All rights, including rights created by patent grant or registration of a utility model or design, are reserved.

Station: UW KOSICE
Device: EA12 EAG
Device type: 6MB5220-1
Packet numbe 8
Version no.: 1

Connection:
Device: LZG
Subrack: LZG-BGT
Module: AST 1
UART: 2
MUX: 12

General definitions:

Rated auxiliary voltage: 60 V, 110 V, 125 V DC
LZG monitoring: Indication
Ext. met. value tr. comm.: No
LIVE contact: No
Buffer type: I/O unit normal
Timeout monitoring: Yes

Scan cycle for ind. input:

Scan cycle for fault ind.: 10
Scan number 02: 10
Scan cycle for pos. ind.: 100
Scan number 03: 3
Scan cycle for op. ind.: 1000
Scan number 04: 1

Specifications for chatter dis

Analog interval in s:
Blockage time in s:
Number of test cycle
Number of block. cyc

Input	Connect designation	Section	Bay	Logical device	Lower limit	Value text	Column section	Column bay	Column logical device	Column information	Column value text	With command	Indication type	Entry in event list	Entry in alarm list	Acknowledge	Display in indication area	Indication class	Entry in SML	Display in diagram	Display of intermed. pos.	Acknowledge	Display under voltage level	Indication class	Archive	Operational indications	Protection indications	Filt. of raised & cleared	Filtering of intermed. pos.
1	8D4	R110	EA12	ODPOJOVAC Q2	SCHALTZUSTAND	vyp.	22	27	39	0	75	LZM	DI	O					N	Y	N	O	Y	2	R	Y	N		N
2	7D1	R110	EA12	ODPOJOVAC Q2	SCHALTZUSTAND	zap.	22	27	39	0	75	LZM	DI	O					N	Y	N	O	Y	2	R	Y	N		N
3	7D2	R110	EA12	ODPOJOVAC Q7	SCHALTZUSTAND	vyp.	22	27	39	0	75	LZM	DI	O					N	Y	N	O	Y	2	R	Y	N		N
4	7D3	R110	EA12	ODPOJOVAC Q7	SCHALTZUSTAND	zap.	22	27	39	0	75	LZM	DI	O					N	Y	N	O	Y	2	R	Y	N		N
5	7D4	R110	EA12	VYPINAC Q0	SCHALTZUSTAND	vyp.	22	27	39	0	75	LZM	DI	O					N	Y	N	O	Y	2	R	Y	N		N
6	6D1	R110	EA12	VYPINAC Q0	SCHALTZUSTAND	zap.	22	27	39	0	75	LZM	DI	O					N	Y	N	O	Y	2	R	Y	N		N
7	6D3	R110	EA12	ODPOJOVAC Q9	SCHALTZUSTAND	vyp.	22	27	39	0	75	LZM	DI	O					N	Y	N	O	Y	2	R	Y	N		N
8	6D4	R110	EA12	ODPOJOVAC Q9	SCHALTZUSTAND	zap.	22	27	39	0	75	LZM	DI	O					N	Y	N	O	Y	2	R	Y	N		N
9	5D1	R110	EA12	ODPOJOVAC Q1	SCHALTZUSTAND	vyp.	22	27	39	0	75	LZM	DI	O					N	Y	N	O	Y	2	R	Y	N		N
10	5D2	R110	EA12	ODPOJOVAC Q1	SCHALTZUSTAND	zap.	22	27	39	0	75	LZM	DI	O					N	Y	N	O	Y	2	R	Y	N		N
11	5D3																												
13	8FA																												
14	7F1	R110	EA12		8TK PORUCHA	KON ZAC	22	27	0	39	75	PV	SI	R/C	Y	R/C	Y	1	N	N					R/C	Y	N	N	
15	7F2	R110	EA12		VYPN.VYPINAC.BEZ POVELU	KON ZAC	22	27	0	39	75	PV	TR	O	Y	O	Y	1	N	N					R	Y	N		
16	7F3	R110	EA12		PREVADZKA S1	KON ZAC	22	27	0	39	75	PV	SI	R/C	Y	R/C	Y	1	N	Y		N	N		R/C	Y	N	N	
17	7F4	R110	EA12		S5 POLOHA VYPN./MIESTNE	KON ZAC	22	27	0	39	75	PV	SI	R/C	Y	R/C	Y	1	N	Y		N	N		R/C	Y	N	N	
18	6F1	R110	EA12		CHYBA OBSLUHY	KON ZAC	22	27	0	39	75	PV	SI	R/C	N				N	N					R/C	Y	N	N	
19	6F3	R110	EA12		PREKROCENIE CASU BEHU	KON ZAC	22	27	0	39	75	PV	SI	R/C	N				N	N					R/C	Y	N	N	
20	6F4	R110	EA12		PORUCHA VYPINACA	KON ZAC	22	27	0	39	75	PV	SI	R/C	Y	R/C	Y	1	N	N					R/C	N	Y	N	
21	5F1	R110	EA12		STRATA js./st. NAPATI	KON ZAC	22	27	0	39	75	PV	SI	R/C	Y	R/C	Y	1	N	N					R/C	N	Y	N	
22	5F2	R110	EA12		RUCNE VYPN. VYPINACA	KON ZAC	22	27	0	39	75	PV	TR	O	Y	O	Y	1	N	N					R	N	Y		
23	5F3	R110	EA12		STRATA NAPATI STRANA 6KV	KON ZAC	22	27	0	39	75	PV	SI	R/C	Y	R/C	Y	1	N	N					R/C	N	Y	N	

Standard KO050722.ODA
Documentation structur:
Source file:

Date	22.07.2005	VSZ KOSICE	SIEMENS AG ISAOOLS
Drawn	LANG		
Appr.			
Norm		Orig./Repl. 1/Repl. by	

Substation control system 6MB
Compact I/O unit:
Indications
Table

T = /BG 70
+
-S106
Page 70

Rev. | Remarks | Date | Name

Station: UW KOSICE
Device: EA12 EAG
Device type: 6MB5220-1
Packet numbe 8
Version no.: 1

Connection:
Device: LZG
Subrack: LZG-BGT
Module: AST 1
UART: 2
MUX: 12

General definitions:
Rated auxiliary voltage: 60 V, 110 V, 125 V DC
LZG monitoring: Indication
Ext. met. value tr. comm.: No
LIVE contact: No
Buffer type: I/O unit normal
Timeout monitoring: Yes

Scan cycle for ind. input:
Scan cycle for fault ind.: 10
Scan number 02: 10
Scan cycle for pos. ind.: 100
Scan number 03: 3
Scan cycle for op. ind.: 1000
Scan number 04: 1

Specifications for chatter dis
Analog interval in s:
Blockage time in s:
Number of test cycle
Number of block. cyc

Input	Connect designation	Bay blockage	Monitored as feedback	Checkback monit. time in s	Command derivation	Indication derivation	Remote transmission FP: Master station	Name of telegram	Name of info element
1	8D4	N	Y	20.0			IEC 870-5-101	Meldungstelegramm DM	412
2	7D1	N	Y	20.0			IEC 870-5-101	Meldungstelegramm DM	412
3	7D2	N	Y	20.0			IEC 870-5-101	Meldungstelegramm DM	413
4	7D3	N	Y	20.0			IEC 870-5-101	Meldungstelegramm DM	413
5	7D4	N	Y	1.0			IEC 870-5-101	Meldungstelegramm DM	410
6	6D1	N	Y	1.0			IEC 870-5-101	Meldungstelegramm DM	410
7	6D3	N	Y	20.0			IEC 870-5-101	Meldungstelegramm DM	415
8	6D4	N	Y	20.0			IEC 870-5-101	Meldungstelegramm DM	415
9	5D1	N	Y	20.0			IEC 870-5-101	Meldungstelegramm DM	411
10	5D2	N	Y	20.0			IEC 870-5-101	Meldungstelegramm DM	411
11	5D3								
13	8FA								
14	7F1	N	N		Alarm 1 (Hupenbefehl)	KVIT 8TK			
15	7F2	N	N		Alarm 1 (Hupenbefehl)	KVIT 8TK			
16	7F3	N	N		Alarm 1 (Hupenbefehl)				
17	7F4	N	N		Alarm 1 (Hupenbefehl)				
18	6F1	N	N		Alarm 1 (Hupenbefehl)	KVIT 8TK			
19	6F3	N	N		Alarm 1 (Hupenbefehl)	KVIT 8TK			
20	6F4	N	N		Alarm 1 (Hupenbefehl)				
21	5F1	N	N		Alarm 1 (Hupenbefehl)				
22	5F2	N	N		Alarm 1 (Hupenbefehl)				
23	5F3	N	N		Alarm 1 (Hupenbefehl)				

Proprietary data, company confidential. All rights reserved.
Confie a titre de secret d'entreprise. Tous droits r,serv,s.
Comunicado como segredo empresarial. Reservados todos os direitos.
Confiado como secreto industrial. Nos reservamos todos los derechos.
The reproduction, transmission or use of this document or its is not permitted without expres written authority.
Offenders will be liable for damages. All rights, including rights created by patent grant or registration of a utility model or design, are reserved

Documentation structur: Standard
Source file: KO050722.ODA

Date	22.07.2005	VSZ KOSICE	SIEMENS AG ISAOOLS	Substation control system 6MB	T = /BG 71
Drawn	LANG			Compact I/O unit:	+
Appr.				Indications	-S106 Page
Norm		Orig./Repl. 1/Repl. by		Table	

Remarks | Date | Name

Station: UW KOSICE
Device: EA12 EAG
Device type: 6MB5220-1

Output	Connect designation	Section	Bay	Logical device	Lower limit	Value text	Column section	Column bay	Column logical device	Column information	Column value text	Type of command	Entry in event list	Entry in alarm list	Entry in SML	Display in diag. as select. field	Archive	Operational indications	SW termination time in s	Checkback monit. time in s	Interlocking type:
1	3C1/3C2	R110	EA12	ODPOJOVAC Q2	SCHALTZUSTAND	8D4 vyp.	22	27	39	0	75	DC	O		N	PV	R	Y	0.6	20.0	SCHALTGERÄT
2	3C3/3C4	R110	EA12	ODPOJOVAC Q2	SCHALTZUSTAND	8D4 zap.	22	27	39	0	75	DC	O		N	PV	R	Y	0.6	20.0	SCHALTGERÄT
3	4C1/4C2	R110	EA12	ODPOJOVAC Q7	SCHALTZUSTAND	7D2 vyp.	22	27	39	0	75	DC	O		N	PV	R	Y	0.6	20.0	SCHALTGERÄT
4	4C3/4C4	R110	EA12	ODPOJOVAC Q7	SCHALTZUSTAND	7D2 zap.	22	27	39	0	75	DC	O		N	PV	R	Y	0.6	20.0	SCHALTGERÄT
5	4D1/4D2	R110	EA12	VYPINAC Q0	SCHALTZUSTAND	7D4 vyp.	22	27	39	0	75	DC	O		N	PV	R	Y	0.6	1.0	SCHALTGERÄT
6	4D3/4D4	R110	EA12	VYPINAC Q0	SCHALTZUSTAND	7D4 zap.	22	27	39	0	75	DC	O		N	PV	R	Y	0.6	1.0	SCHALTGERÄT
7	2D1/2D2	R110	EA12		KVITOVANIE	KON ZAC	22	27	0	39	75	SC	O	N	N	PV	R	N	0.6		SCHALTGERÄT
9	3E1/3E2	R110	EA12	ODPOJOVAC Q9	SCHALTZUSTAND	6D3 vyp.	22	27	39	0	75	DC	O		N	PV	R	Y	0.6	20.0	SCHALTGERÄT
10	3E3/3E4	R110	EA12	ODPOJOVAC Q9	SCHALTZUSTAND	6D3 zap.	22	27	39	0	75	DC	O		N	PV	R	Y	0.6	20.0	SCHALTGERÄT
11	4E1/4E2	R110	EA12	ODPOJOVAC Q1	SCHALTZUSTAND	5D1 vyp.	22	27	39	0	75	DC	O		N	PV	R	Y	0.6	20.0	SCHALTGERÄT
12	4E3/4E4	R110	EA12	ODPOJOVAC Q1	SCHALTZUSTAND	5D1 zap.	22	27	39	0	75	DC	O		N	PV	R	Y	0.6	20.0	SCHALTGERÄT
13	4F1/4F2															PV					
14	4F3/4F4															PV					
15	2F1/2F2	R110	EA12		DEBLOKACIA BLOKOVANIA	KON ZAC	22	27	0	39	75	SC	R/C	N	N	PV	R/C	Y			SCHALTGERÄT

Proprietary data, company confidential. All rights reserved.
Confie a titre de secret d'entreprise. Tous droits réservés.
Comunicado como segredo empresarial. Reservados todos os direitos.
Confiado como secreto industrial. Nos reservamos todos los derechos.
The reproduction, transmission or use of this document or its is not permitted without express written authority.
Offenders will be liable for damages. All rights, including rights created by patent grant or registration of a utility model or design, are reserved

Documentation structur: Standard
Source file: KO050722.ODA

Rev.	Remarks	Date	Name	Date	22.07.2005	VSZ KOSICE	SIEMENS AG ISAOOLS	Substation control system 6MB
				Drawn	LANG			Compact I/O unit:
				Appr.				Commands
				Norm		Orig./Repl. 1/Repl. by		Table

T = /BG 72
+
-S106
Page 72

Station: UW KOSICE
Device: EA12 EAG
Device type: 6MB5220-1

Analog channel no.	Connect designation	Section	Bay	Logical device	Lower limit	Display value	Dimension	Zero suppression f. display in %	Text for display	Bay blockage	Thres val. for switchover in %	Process analog value in I/O uni	With live-zero monitoring	Display in diagram	Archive	Analog recording	Recording mode	No. of val. to be averaged	Scan interval in s	Analog value type	Max. value of analog value	Keep non-return pointer	Calculated demand value
1	STROM L2	R110	EA12	MESSWERTE STROM	PRUD L2	200.00	A	1.0	PRUD L2	N	0.0	N	PV	Y	Y	PERM	Analog value direct		900	CUR	240.00	PV	PV
2	STROM L1	R110	EA12	MESSWERTE STROM	PRUD L1	200.00	A	1.0	PRUD L1	N	0.0	N	PV	N	Y	PERM	Analog value direct		900	CUR	240.00	PV	PV
3	STROM L3	R110	EA12	MESSWERTE STROM	PRUD L3	200.00	A	1.0	PRUD L3	N	0.0	N	PV	N	Y	PERM	Analog value direct		900	CUR	240.00	PV	PV
4	UL1-UL2												PV										
5	UL1-UL3												PV										
6	UL2-UL3												PV										
7	W-LEISTUNG												PV										
8	B-LEISTUNG												PV										

Proprietary data, company confidential. All rights reserved.
Confirm a titre de secret d'entreprise. Tous droits réservés.
Comunicado como segredo empresarial. Reservados todos os direitos.
Confiado como secreto industrial. Nos reservamos todos los derechos.

The reproduction, transmission or use of this document or its is not permitted without express written authority.
Offenders will be liable for damages. All rights, including rights created by patent grant or registration of a utility model or design, are reserved

Documentation structur: Standard
Source file: KO050722.ODA

Remarks	Date	Name	Date	22.07.2005	VSZ KOSICE	SIEMENS AG ISAOOLS	Substation control system 6MB
			Drawn	LANG			Compact I/O unit:
			Appr.				Analog values
			Norm		Orig./Repl. 1/Repl. by		Table

T = /BG 73
+
-S106
Page 3

Station: UW KOSICE
Device: EA12 EAG
Device type: 6MB5220-1

Analog channel no.	Connect designation	Derive percentage value	Derive metered value	Static limit monitoring: Filtering time in s	Lower limit 1	Indication at lower limit 1	Lower limit 2	Indication at lower limit 2	Upper limit 1	Indication at higher limit 1	Upper limit 2	Indication at higher limit 2	Teletrans. FP raw val. Master station	Name of telegram	Name of info element
1	STROM L2	PV	PV	0					239.90	PRUD L2 HH1			IEC 870-5-101	Meßwerttelegramm	810
2	STROM L1	PV	PV	0					239.90	PRUD L1 HH1			IEC 870-5-101	Meßwerttelegramm	811
3	STROM L3	PV	PV	0					239.90	PRUD L3 HH1			IEC 870-5-101	Meßwerttelegramm	812
4	UL1-UL2		PV												
5	UL1-UL3		PV												
6	UL2-UL3		PV												
7	W-LEISTUNG		PV												
8	B-LEISTUNG		PV												

Proprietary data, company confidential. All rights reserved.
Confidential data, trade secret dentreprise. Tous droits réservés.
Comunicado como segredo empresarial. Reservados todos os direitos.
Confiado como secreto industrial. Nos reservamos todos los derechos.

The reproduction, transmission or use of this document or its is not permitted without express written authority.
Offenders will be liable for damages. All rights, including rights created by patent grant or registration of a utility model or design, are reserved.

Documentation structur: Standard
Source file: KO050722.ODA

Rev.	Remarks	Date	Name	Norm
			Date	22.07.2005
			Drawn	LANG
			Appr.	

VSZ KOSICE
Orig./Repl. 1/Repl. by

SIEMENS AG
ISATOOLS

Substation control system 6MB
Compact I/O unit:
Analog values
Table

T = /BG 74
+
-S106
Page 74

Proprietary data, company confidential. All rights reserved
Confia a ltra de secret dentreprise. Tous drolts yserv/s.
Comunicado como segredo empresarial. Reservados todos os direitos.
Confiado como secreto industrial. Nos reservamos todos los derechos.

The reproduction, transmission or use of this document or its
is not permitted without express written authority.
Offenders will be liable for damages. All rights, including rights
created by patent grant or registration of a utility model or design, are reserved

Documentation structur: Standard
Source file: KO050722.ODA

Station: UW KOSICE
Device: EA13 EAG
Device type: 6MB5220-1
Packet numbe 8
Version no.: 1

Connection:
Device: LZG
Subrack: LZG-BGT
Module: AST 1
UART: 2
MUX: 13

General definitions:

Rated auxiliary voltage: 60 V, 110 V, 125 V DC
LZG monitoring: Indication
Ext. met. value tr. comm.: No
LIVE contact: No
Buffer type: I/O unit normal
Timeout monitoring: Yes

Scan cycle for ind. input:

Scan cycle for fault ind.: 10
Scan number 02: 10
Scan cycle for pos. ind.: 100
Scan number 03: 3
Scan cycle for op. ind.: 1000
Scan number 04: 1

Specifications for chatter dis

Analog interval in s:
Blockage time in s:
Number of test cycle
Number of block. cyc

Input	Connect designation	Section	Bay	Logical device	Lower limit	Value text	Column section	Column bay	Column logical device	Column information	Column value text	With command	Indication type	Entry in event list	Entry in alarm list	Acknowledge	Display in indication area	Indication class	Entry in SML	Display in diagram	Display of intermed. pos.	Acknowledge	Display under voltage level	Indication class	Archive	Operational indications	Protection indications
1	8D4	R110	EA13	ODPOJOVAC Q2	SCHALTZUSTAND	vyp.	22	27	39	0	75	LZM	DI	O					N	Y	N	O	Y	2	R	Y	N
2	7D1	R110	EA13	ODPOJOVAC Q2	SCHALTZUSTAND	zap.	22	27	39	0	75	LZM	DI	O					N	Y	N	O	Y	2	R	Y	N
3	7D2	R110	EA13	ODPOJOVAC Q7	SCHALTZUSTAND	vyp.	22	27	39	0	75	LZM	DI	O					N	Y	N	O	Y	2	R	Y	N
4	7D3	R110	EA13	ODPOJOVAC Q7	SCHALTZUSTAND	zap.	22	27	39	0	75	LZM	DI	O					N	Y	N	O	Y	2	R	Y	N
5	7D4																										
6	6D1																										
7	6D3	R110	EA13	ODPOJOVAC Q9	SCHALTZUSTAND	vyp.	22	27	39	0	75	LZM	DI	O					N	Y	N	O	Y	2	R	Y	N
8	6D4	R110	EA13	ODPOJOVAC Q9	SCHALTZUSTAND	zap.	22	27	39	0	75	LZM	DI	O					N	Y	N	O	Y	2	R	Y	N
9	5D1	R110	EA13	ODPOJOVAC Q1	SCHALTZUSTAND	vyp.	22	27	39	0	75	LZM	DI	O					N	Y	N	O	Y	2	R	Y	N
10	5D2	R110	EA13	ODPOJOVAC Q1	SCHALTZUSTAND	zap.	22	27	39	0	75	LZM	DI	O					N	Y	N	O	Y	2	R	Y	N
11	5D3	R110	EA13		8TK PORUCHA	KON ZAC	22	27	0	39	75	PV	SI	R/C	Y	R/C	Y	1	N	N					R/C	Y	N
13	8FA	R110	EA13	ODPOJOVAC ZEMNIACI Q8	SCHALTZUSTAND	vyp.	22	27	39	0	75	LZM	DI	O					N	Y	N	O	Y	2	R	Y	N
14	7F1	R110	EA13	ODPOJOVAC ZEMNIACI Q8	SCHALTZUSTAND	zap.	22	27	39	0	75	LZM	DI	O					N	Y	N	O	Y	2	R	Y	N
15	7F2	R110	EA13		VYPN.VYPINAC.BEZ POVELU	KON ZAC	22	27	0	39	75	PV	TR	O	Y	O	Y	1	N	N					R	Y	N
16	7F3	R110	EA13		PREVADZKA S1	KON ZAC	22	27	0	39	75	PV	SI	R/C	Y	R/C	Y	1	N	Y		N	N		R/C	Y	N
17	7F4	R110	EA13		S5 POLOHA VYPN./MIESTNE	KON ZAC	22	27	0	39	75	PV	SI	R/C	Y	R/C	Y	1	N	Y		N	N		R/C	Y	N
18	6F1	R110	EA13		CHYBA OBSLUHY	KON ZAC	22	27	0	39	75	PV	SI	R/C	N				N	N					R/C	Y	N
19	6F3	R110	EA13		PREKROCENIE CASU BEHU	KON ZAC	22	27	0	39	75	PV	SI	R/C	N				N	N					R/C	Y	N
20	6F4	R110	EA13		PORUCHA VYPINACA	KON ZAC	22	27	0	39	75	PV	SI	R/C	Y	R/C	Y	1	N	N					R/C	N	Y
21	5F1	R110	EA13		STRATA js./st. NAPATI	KON ZAC	22	27	0	39	75	PV	SI	R/C	Y	R/C	Y	1	N	N					R/C	N	Y
22	5F2	R110	EA13		PORUCHA FREKVENC.OCHR.	KON ZAC	22	27	0	39	75	PV	SI	R/C	Y	R/C	Y	1	N	N					R/C	N	Y
23	5F3	R110	EA13		POSOB. FREKVENC.OCHR.	KON ZAC	22	27	0	39	75	PV	TR	O	Y	O	Y	1	N	N					R	N	Y

Date	22.07.2005	VSZ KOSICE	SIEMENS AG ISATOOLS
Drawn	LANG		Substation control system 6MB
Appr.			Compact I/O unit:
Norm			Indications
			Table

Remarks | Date | Name | Orig./Repl. 1/Repl. by

T = /BG 75
+
-S106
Page 75

Proprietary data, company confidential. All rights reserved.
Confia a título de secret d'entreprise. Tous droits r.serv.s.
Comunicado como segredo empresarial. Reservados todos os direitos.
Confiado como secreto industrial. Nos reservamos todos los derechos.
The reproduction, transmission or use of this document or its contents is not permitted without express written authority. Offenders will be liable for damages. All rights, including rights created by patent grant or registration of a utility model or design, are reserved.

Station: UW KOSICE
Device: EA13 EAG
Device type: 6MB5220-1
Packet numbe 8
Version no.: 1

Connection:
Device: LZG
Subrack: LZG-BGT
Module: AST 1
UART: 2
MUX: 13

General definitions:

Rated auxiliary voltage:	60 V, 110 V, 125 V DC
LZG monitoring:	Indication
Ext. met. value tr. comm.:	No
LIVE contact:	No
Buffer type:	I/O unit normal
Timeout monitoring:	Yes

Scan cycle for ind. input:

Scan cycle for fault ind.:	10
Scan number 02:	10
Scan cycle for pos. ind.:	100
Scan number 03:	3
Scan cycle for op. ind.:	1000
Scan number 04:	1

Specifications for chatter dis

Analog interval in s:
Blockage time in s:
Number of test cycle
Number of block. cyc

Input	Connect designation	Filt. of raised & cleared	Filtering of intermed. pos.	Bay blockage	Monitored as feedback	Checkback monit. time in s	Command derivation	Indication derivation	Remote transmission FP: Master station	Name of telegram	Name of info element
1	8D4		N	N	Y	20.0			IEC 870-5-101	Meldungstelegramm DM	422
2	7D1		N	N	Y	20.0			IEC 870-5-101	Meldungstelegramm DM	422
3	7D2		N	N	Y	20.0			IEC 870-5-101	Meldungstelegramm DM	423
4	7D3		N	N	Y	20.0			IEC 870-5-101	Meldungstelegramm DM	423
5	7D4										
6	6D1										
7	6D3		N	N	Y	20.0			IEC 870-5-101	Meldungstelegramm DM	425
8	6D4		N	N	Y	20.0			IEC 870-5-101	Meldungstelegramm DM	425
9	5D1		N	N	Y	20.0			IEC 870-5-101	Meldungstelegramm DM	421
10	5D2		N	N	Y	20.0			IEC 870-5-101	Meldungstelegramm DM	421
11	5D3	N		N	N		Alarm 1 (Hupenbefehl)	KVIT 8TK			
13	8FA		N	N	Y	20.0			IEC 870-5-101	Meldungstelegramm DM	424
14	7F1		N	N	Y	20.0			IEC 870-5-101	Meldungstelegramm DM	424
15	7F2			N	N		Alarm 1 (Hupenbefehl)	KVIT 8TK			
16	7F3	N		N	N		Alarm 1 (Hupenbefehl)				
17	7F4	N		N	N		Alarm 1 (Hupenbefehl)				
18	6F1	N		N	N		Alarm 1 (Hupenbefehl)	KVIT 8TK			
19	6F3	N		N	N		Alarm 1 (Hupenbefehl)	KVIT 8TK			
20	6F4	N		N	N		Alarm 1 (Hupenbefehl)				
21	5F1	N		N	N		Alarm 1 (Hupenbefehl)				
22	5F2	N		N	N		Alarm 1 (Hupenbefehl)				
23	5F3			N	N		Alarm 1 (Hupenbefehl)				

Documentation structur: Standard
Source file: KO050722.ODA

Rev.	Remarks	Date	Name	Norm	Date 22.07.2005	Drawn LANG	Appr.	Orig./Repl. 1/Repl. by

VSZ KOSICE

SIEMENS AG
ISAOOLS

Substation control system 6MB
Compact I/O unit:
Indications
Table

T = /BG 76
+
-S106
Page 76

Station: UW KOSICE
Device: EA13 EAG
Device type: 6MB5220-1

Output	Connect designation	Section	Bay	Logical device	Lower limit	Value text	Column section	Column bay	Column logical device	Column information	Column value text	Type of command	Entry in event list	Entry in alarm list	Entry in SML	Display in diag. as select. field	Archive	Operational indications	SW termination time in s	Checkback monit. time in s	Interlocking type:
1	3C1/3C2	R110	EA13	ODPOJOVAC Q2	SCHALTZUSTAND	8D4 vyp.	22	27	39	0	75	DC	O		N	PV	R	Y	0.6	20.0	SCHALTGERÄT
2	3C3/3C4	R110	EA13	ODPOJOVAC Q2	SCHALTZUSTAND	8D4 zap.	22	27	39	0	75	DC	O		N	PV	R	Y	0.6	20.0	SCHALTGERÄT
3	4C1/4C2	R110	EA13	ODPOJOVAC Q7	SCHALTZUSTAND	7D2 vyp.	22	27	39	0	75	DC	O		N	PV	R	Y	0.6	20.0	SCHALTGERÄT
4	4C3/4C4	R110	EA13	ODPOJOVAC Q7	SCHALTZUSTAND	7D2 zap.	22	27	39	0	75	DC	O		N	PV	R	Y	0.6	20.0	SCHALTGERÄT
5	4D1/4D2															PV					
6	4D3/4D4															PV					
7	2D1/2D2	R110	EA13		KVITOVANIE	KON ZAC	22	27	0	39	75	SC	O	N	N	PV	R	N	0.6		SCHALTGERÄT
9	3E1/3E2	R110	EA13	ODPOJOVAC Q9	SCHALTZUSTAND	6D3 vyp.	22	27	39	0	75	DC	O		N	PV	R	Y	0.6	20.0	SCHALTGERÄT
10	3E3/3E4	R110	EA13	ODPOJOVAC Q9	SCHALTZUSTAND	6D3 zap.	22	27	39	0	75	DC	O		N	PV	R	Y	0.6	20.0	SCHALTGERÄT
11	4E1/4E2	R110	EA13	ODPOJOVAC Q1	SCHALTZUSTAND	5D1 vyp.	22	27	39	0	75	DC	O		N	PV	R	Y	0.6	20.0	SCHALTGERÄT
12	4E3/4E4	R110	EA13	ODPOJOVAC Q1	SCHALTZUSTAND	5D1 zap.	22	27	39	0	75	DC	O		N	PV	R	Y	0.6	20.0	SCHALTGERÄT
13	4F1/4F2	R110	EA13	ODPOJOVAC ZEMNIACI Q8	SCHALTZUSTAND	8FA vyp.	22	27	39	0	75	DC	O		N	PV	R	Y	0.6	20.0	SCHALTGERÄT
14	4F3/4F4	R110	EA13	ODPOJOVAC ZEMNIACI Q8	SCHALTZUSTAND	8FA zap.	22	27	39	0	75	DC	O		N	PV	R	Y	0.6	20.0	SCHALTGERÄT
15	2F1/2F2	R110	EA13		DEBLOKACIA BLOKOVANIA	KON ZAC	22	27	0	39	75	SC	R/C	N	N	PV	R/C	Y			SCHALTGERÄT

Proprietary data, company confidential. All rights reserved.
Confie a titre de secret d'entreprise. Tous droits réservés.
Comunicado como segredo empresarial. Reservados todos os direitos.
Confiado como secreto industrial. Nos reservamos todos los derechos.
The reproduction, transmission or use of this document or its is not permitted without express written authority.
Offenders will be liable for damages. All rights, including rights created by patent grant or registration of a utility model or design, are reserved

Documentation structur: Standard
Source file: KO050722.ODA

Remarks	Date	Name	Date	22.07.2005	VSZ KOSICE	SIEMENS AG ISAOOLS	Substation control system 6MB
			Drawn	LANG			Compact I/O unit:
			Appr.				Commands
			Norm		Orig./Repl. 1/Repl. by		Table

T = /BG 77
+
-S106
Page 7

Station: UW KOSICE
Device: EA13 EAG
Device type: 6MB5220-1

Output	Connect designation	Switch interlocking
1	3C1/3C2	
2	3C3/3C4	
3	4C1/4C2	
4	4C3/4C4	
5	4D1/4D2	
6	4D3/4D4	
7	2D1/2D2	
9	3E1/3E2	
10	3E3/3E4	
11	4E1/4E2	
12	4E3/4E4	
13	4F1/4F2	SCHALTVERRIEGELUNG Q8 bei UG1 L1
14	4F3/4F4	SCHALTVERRIEGELUNG Q8 bei UG1 L1
15	2F1/2F2	

Proprietary data, company confidential. All rights reserved
Confia a titre de secret d'entreprise. Tous droits reservés
Comunicado como secreto empresarial. Reservados todos os direitos.
Confiado como secreto industrial. Nos reservamos todos los derechos.
The reproduction, transmission or use of this document or its contents is not permitted without expres written authority. Offenders will be liable for damages. All rights, including rights created by patent grant or registration of a utility model or design, are reserved

Documentation structur: Standard
Source file: KO050722.ODA

Rev.	Remarks	Date	Name	Norm	
				Date	22.07.2005
				Drawn	LANG
				Appr.	

VSZ KOSICE
Orig./Repl. 1/Repl. by

SIEMENS AG
ISATOOLS

Substation control system 6MB
Compact I/O unit:
Commands
Table

T = /BG 78
+
-S106
Page 78

Station: UW KOSICE
Device: EA13 EAG
Device type: 6MB5220-1

Analog channel no.	Connect designation	Section	Bay	Logical device	Lower limit	Display value	Dimension	Zero suppression f. display in %	Text for display	Bay blockage	Thres val. for switchover in %	Process analog value in I/O uni	With live-zero monitoring	Display in diagram
1	STROM L2	R110	EA13	MESSWERTE STROM	PRUD L2	400.00	A	1.0	PRUD L2	N	0.0	N	PV	Y
2	STROM L1	R110	EA13	MESSWERTE STROM	PRUD L1	400.00	A	1.0	PRUD L1	N	0.0	N	PV	N
3	STROM L3	R110	EA13	MESSWERTE STROM	PRUD L3	400.00	A	1.0	PRUD L3	N	0.0	N	PV	N
4	UL1-UL2	R110	EA13	MESSWERTE SPANNUNG	NAPATIE L1-L2	110.00	KV	10.0	NAPATIE L1-L2	N	0.0	N	PV	Y
5	UL1-UL3	R110	EA13	MESSWERTE SPANNUNG	NAPATIE L1-L3	110.00	KV	10.0	NAPATIE L1-L3	N	0.0	N	PV	Y
6	UL2-UL3	R110	EA13	MESSWERTE SPANNUNG	NAPATIE L2-L3	110.00	KV	10.0	NAPATIE L2-L3	N	0.0	N	PV	Y
7	W-LEISTUNG	R110	EA13		VYKON CINNY	76.20	MW	1.0	VYKON CINNY	N	0.0	N	PV	Y
8	B-LEISTUNG	R110	EA13		VYKON JALOVY	76.20	MVar	1.0	VYKON JALOVY	N	0.0	N	PV	Y

Proprietary data, company confidential. All rights reserved.
Confie a titre de secret d'entreprise. Tous droits reservés.
Comunicado como segredo empresarial. Reservados todos os direitos.
Confiado como secreto industrial. Nos reservamos todos los derechos.

The reproduction, transmission or use of this document or its is not permitted without express written authority.
Offenders will be liable for damages. All rights, including rights created by patent grant or registration of a utility model or design, are reserved

Documentation structur: Standard
Source file: KO050722.ODA

			Date	22.07.2005	VSZ KOSICE	SIEMENS AG ISA TOOLS	Substation control system 6MB
			Drawn	LANG			Compact I/O unit:
			Appr.				Analog values
F	Remarks	Date	Name Norm		Orig./Repl. 1/Repl. by		Table

T = /BG 79
+
-S106
Page

Proprietary data, company confidential. All rights reserved
Confia a tira da secret dentreprise. Tous droits reservs
Comunicado como segredo empresarial. Reservados todos os direitos
Confiado como secreto industrial. Nos reservamos todos los derechos.

The reproduction, transmission or use of this document or its
is not permitted without expres written authority.
Offenders will be liable for damages. All rights, including rights
created by patent grant or registration of a utility model or design, are reserved

Station: UW KOSICE
Device: EA13 EAG
Device type: 6MB5220-1

Analog channel no.	Connect designation	Archive	Analog recording	Recording mode	No. of val. to be averaged	Scan interval in s	Analog value type	Max. value of analog value	Keep non-return pointer	Calculated demand value	Derive percentage value	Derive metered value
1	STROM L2	Y	PERM	Analog value direct		900	CUR	480.00	PV	PV	PV	PV
2	STROM L1	Y	PERM	Analog value direct		900	CUR	480.00	PV	PV	PV	PV
3	STROM L3	Y	PERM	Analog value direct		900	CUR	480.00	PV	PV	PV	PV
4	UL1-UL2	Y	PERM	Analog value direct		900	PPV	132.00	PV	PV	PV	PV
5	UL1-UL3	Y	PERM	Analog value direct		900	PPV	132.00	PV	PV	PV	PV
6	UL2-UL3	Y	PERM	Analog value direct		900	PPV	132.00	PV	PV	PV	PV
7	W-LEISTUNG	Y	PERM	Analog value direct		900	AP	91.45	PV	PV	PV	LZM
8	B-LEISTUNG	Y	PERM	Analog value direct		900	RP	91.45	PV	PV	PV	PV

Documentation structur: Standard
Source file: KO050722.ODA

Rev.	Remarks	Date	Name	Norm
			Date	22.07.2005
			Drawn	LANG
			Appr.	

VSZ KOSICE
Orig./Repl. 1/Repl. by

SIEMENS AG
ISATOOLS

Substation control system 6MB
Compact I/O unit:
Analog values
Table

T = /BG 80
+
-S106
Page 80

Station: UW KOSICE
Device: EA13 EAG
Device type: 6MB5220-1

Analog channel no.	Connect designation	Static limit monitoring: Filtering time in s	Lower limit 1	Indication at lower limit 1	Lower limit 2	Indication at lower limit 2	Upper limit 1	Indication at higher limit 1	Upper limit 2	Indication at higher limit 2	Teletrans. FP raw val. Master station	Name of telegram	Name of info element
1	STROM L2	0					479.90	PRUD L2 HH1			IEC 870-5-101	Meßwerttelegramm	820
2	STROM L1	0					479.90	PRUD L1 HH1			IEC 870-5-101	Meßwerttelegramm	821
3	STROM L3	0					479.90	PRUD L3 HH1			IEC 870-5-101	Meßwerttelegramm	822
4	UL1-UL2	0	99.00	NAPATIE L1-L2 DH1	77.00	NAPATIE L1-L2 DH2	123.00	NAPATIE L1-L2 HH1			IEC 870-5-101	Meßwerttelegramm	823
5	UL1-UL3	0	99.00	NAPATIE L1-L3 DH1			123.00	NAPATIE L1-L3 HH1			IEC 870-5-101	Meßwerttelegramm	824
6	UL2-UL3	0	99.00	NAPATIE L2-L3 DH1			123.00	NAPATIE L2-L3 HH1			IEC 870-5-101	Meßwerttelegramm	825
7	W-LEISTUNG										IEC 870-5-101	Meßwerttelegramm	826
8	B-LEISTUNG										IEC 870-5-101	Meßwerttelegramm	827

Proprietary data, company confidential. All rights reserved
Confie a titre de secret d'entreprise. Tous droits r.serv.s.
Comunicado como segredo empresarial. Reservados todos os direitos.
Confiado como secreto industrial. Nos reservamos todos los derechos.

The reproduction, transmission or use of this document or its is not permitted without expres written authority. Offenders will be liable for damages. All rights, including rights created by patent grant or registration of a utility model or design, are reserved

Documentation structur: Standard
Source file: KO050722.ODA

Remarks	Date	Name	Date	22.07.2005	VSZ KOSICE	SIEMENS AG SAIOOLS	Substation control system 6MB
			Drawn	LANG			Compact I/O unit:
			Appr.				Analog values
			Norm		Orig./Repl. 1/Repl. by		Table

T = /BG 81
+
-S106
Page 1

Proprietary data, company confidential. All rights reserved.
Confie a titre de secret d'entreprise. Tous droits réservés.
Comunicado como segredo empresarial. Reservados todos os direitos.
Confiado como secreto industrial. Nos reservamos todos los derechos.

The reproduction, transmission or use of this document or its contents is not permitted without express written authority. Offenders will be liable for damages. All rights, including rights created by patent grant or registration of a utility model or design, are reserved.

Station: UW KOSICE
Device: EA15 EAG
Device type: 6MB5220-1
Packet numbe 8
Version no.: 1

Connection:
Device: LZG
Subrack: LZG-BGT
Module: AST 1
UART: 2
MUX: 15

General definitions:

Rated auxiliary voltage: 60 V, 110 V, 125 V DC
LZG monitoring: Indication
Ext. met. value tr. comm.: No
LIVE contact: No
Buffer type: I/O unit normal
Timeout monitoring: Yes

Scan cycle for ind. input:

Scan cycle for fault ind.: 10
Scan number 02: 10
Scan cycle for pos. ind.: 100
Scan number 03: 3
Scan cycle for op. ind.: 1000
Scan number 04: 1

Specifications for chatter dis

Analog interval in s:
Blockage time in s:
Number of test cycle
Number of block. cyc

Input	Connect designation	Section	Bay	Logical device	Lower limit	Value text	Column section	Column bay	Column logical device	Column information	Column value text	With command	Indication type	Entry in event list	Entry in alarm list	Acknowledge	Display in indication area	Indication class	Entry in SML	Display in diagram	Display of intermed. pos.	Acknowledge	Display under voltage level	Indication class	Archive	Operational indications	Protection indications
1	8D4	R110	EA15	ODPOJOVAC Q2	SCHALTZUSTAND	vyp.	22	27	39	0	75	LZM	DI	O					N	Y	N	O	Y	2	R	Y	N
2	7D1	R110	EA15	ODPOJOVAC Q2	SCHALTZUSTAND	zap.	22	27	39	0	75	LZM	DI	O					N	Y	N	O	Y	2	R	Y	N
3	7D2	R110	EA15	ODPOJOVAC Q7	SCHALTZUSTAND	vyp.	22	27	39	0	75	LZM	DI	O					N	Y	N	O	Y	2	R	Y	N
4	7D3	R110	EA15	ODPOJOVAC Q7	SCHALTZUSTAND	zap.	22	27	39	0	75	LZM	DI	O					N	Y	N	O	Y	2	R	Y	N
5	7D4	R110	EA15	ODPOJOVAC POM.PRIP.Q71	SCHALTZUSTAND	vyp.	22	27	39	0	75	LZM	DI	O					N	Y	N	O	Y	2	R	Y	N
6	6D1	R110	EA15	ODPOJOVAC POM.PRIP.Q71	SCHALTZUSTAND	zap.	22	27	39	0	75	LZM	DI	O					N	Y	N	O	Y	2	R	Y	N
7	6D3	R110	EA15	ODPOJOVAC Q9	SCHALTZUSTAND	vyp.	22	27	39	0	75	LZM	DI	O					N	Y	N	O	Y	2	R	Y	N
8	6D4	R110	EA15	ODPOJOVAC Q9	SCHALTZUSTAND	zap.	22	27	39	0	75	LZM	DI	O					N	Y	N	O	Y	2	R	Y	N
9	5D1	R110	EA15	ODPOJOVAC Q1	SCHALTZUSTAND	vyp.	22	27	39	0	75	LZM	DI	O					N	Y	N	O	Y	2	R	Y	N
10	5D2	R110	EA15	ODPOJOVAC Q1	SCHALTZUSTAND	zap.	22	27	39	0	75	LZM	DI	O					N	Y	N	O	Y	2	R	Y	N
11	5D3	R110	EA15		8TK PORUCHA	KON ZAC	22	27	0	39	75	PV	SI	R/C	Y	R/C	Y	1	N	N					R/C	Y	N
13	8FA	R110	EA15	ODPOJOVAC ZEMNIACI Q8	SCHALTZUSTAND	vyp.	22	27	39	0	75	LZM	DI	O					N	Y	N	O	Y	2	R	Y	N
14	7F1	R110	EA15	ODPOJOVAC ZEMNIACI Q8	SCHALTZUSTAND	zap.	22	27	39	0	75	LZM	DI	O					N	Y	N	O	Y	2	R	Y	N
15	7F2	R110	EA15		VYPN.VYPINAC.BEZ POVELU	KON ZAC	22	27	0	39	75	PV	TR	O	Y	O	Y	1	N	N					R	Y	N
16	7F3	R110	EA15		PREVADZKA S1	KON ZAC	22	27	0	39	75	PV	SI	R/C	Y	R/C	Y	1	N	Y		N	N		R/C	Y	N
17	7F4	R110	EA15		S5 POLOHA VYPN./MIESTNE	KON ZAC	22	27	0	39	75	PV	SI	R/C	Y	R/C	Y	1	N	Y		N	N		R/C	Y	N
18	6F1	R110	EA15		CHYBA OBSLUHY	KON ZAC	22	27	0	39	75	PV	SI	R/C	N				N	N					R/C	Y	N
19	6F3	R110	EA15		PREKROCENIE CASU BEHU	KON ZAC	22	27	0	39	75	PV	SI	R/C	N				N	N					R/C	Y	N
20	6F4	R110	EA15		PORUCHA VYPINACA	KON ZAC	22	27	0	39	75	PV	SI	R/C	Y	R/C	Y	1	N	N					R/C	N	Y
21	5F1	R110	EA15		STRATA js./st. NAPATI	KON ZAC	22	27	0	39	75	PV	SI	R/C	Y	R/C	Y	1	N	N					R/C	N	Y
22	5F2	R110	EA15		PORUCHA FREKVENC.OCHR.	KON ZAC	22	27	0	39	75	PV	SI	R/C	Y	R/C	Y	1	N	N					R/C	N	Y
23	5F3	R110	EA15		POSOB. FREKVENC.OCHR.	KON ZAC	22	27	0	39	75	PV	TR	O	Y	O	Y	1	N	N					R	N	Y

Documentation structur: Standard
Source file: KO050722.ODA

				Date	22.07.2005	VSZ KOSICE	SIEMENS AG ISAOOLS
				Drawn	LANG		
				Appr.			
Rev.	Remarks	Date	Name	Norm		Orig./Repl. 1/Repl. by	

Substation control system 6MB
Compact I/O unit:
Indications
Table

T = /BG 82
+
-S106
Page 82

Proprietary data, company confidential. All rights reserved
Confie a titre de secret d'entreprise. Tous droits reservs.
Comunicado como segredo empresarial. Reservados todos os direitos.
Confiado como secreto industrial. Nos reservamos todos los derechos.

The reproduction, transmission or use of this document or its contents is not permitted without express written authority. Offenders will be liable for damages. All rights, including rights created by patent grant or registration of a utility model or design, are reserved

Station: UW KOSICE
Device: EA15 EAG
Device type: 6MB5220-1
Packet numbe 8
Version no.: 1

Connection:
Device: LZG
Subrack: LZG-BGT
Module: AST 1
UART: 2
MUX: 15

General definitions:

Rated auxiliary voltage: 60 V, 110 V, 125 V DC
LZG monitoring: Indication
Ext. met. value tr. comm.: No
LIVE contact: No
Buffer type: I/O unit normal
Timeout monitoring: Yes

Scan cycle for ind. input:

Scan cycle for fault ind.: 10
Scan number 02: 10
Scan cycle for pos. ind.: 100
Scan number 03: 3
Scan cycle for op. ind.: 1000
Scan number 04: 1

Specifications for chatter dis

Analog interval in s:
Blockage time in s:
Number of test cycle
Number of block. cyc

Input	Connect designation	Filt. of raised & cleared	Filtering of intermed. pos.	Bay blockage	Monitored as feedback	Checkback monit. time in s	Command derivation	Indication derivation	Remote transmission FP: Master station	Name of telegram	Name of info element
1	8D4		N	N	Y	20.0			IEC 870-5-101	Meldungstelegramm DM	432
2	7D1		N	N	Y	20.0			IEC 870-5-101	Meldungstelegramm DM	432
3	7D2		N	N	Y	20.0			IEC 870-5-101	Meldungstelegramm DM	433
4	7D3		N	N	Y	20.0			IEC 870-5-101	Meldungstelegramm DM	433
5	7D4		N	N	Y	20.0			IEC 870-5-101	Meldungstelegramm DM	437
6	6D1		N	N	Y	20.0			IEC 870-5-101	Meldungstelegramm DM	437
7	6D3		N	N	Y	20.0			IEC 870-5-101	Meldungstelegramm DM	435
8	6D4		N	N	Y	20.0			IEC 870-5-101	Meldungstelegramm DM	435
9	5D1		N	N	Y	20.0			IEC 870-5-101	Meldungstelegramm DM	431
10	5D2		N	N	Y	20.0			IEC 870-5-101	Meldungstelegramm DM	431
11	5D3	N		N	N		Alarm 1 (Hupenbefehl)	KVIT 8TK			
13	8FA		N	N	Y	20.0			IEC 870-5-101	Meldungstelegramm DM	434
14	7F1		N	N	Y	20.0			IEC 870-5-101	Meldungstelegramm DM	434
15	7F2			N	N		Alarm 1 (Hupenbefehl)	KVIT 8TK			
16	7F3	N		N	N		Alarm 1 (Hupenbefehl)				
17	7F4	N		N	N		Alarm 1 (Hupenbefehl)				
18	6F1	N		N	N		Alarm 1 (Hupenbefehl)	KVIT 8TK			
19	6F3	N		N	N		Alarm 1 (Hupenbefehl)	KVIT 8TK			
20	6F4	N		N	N		Alarm 1 (Hupenbefehl)				
21	5F1	N		N	N		Alarm 1 (Hupenbefehl)				
22	5F2	N		N	N		Alarm 1 (Hupenbefehl)				
23	5F3			N	N		Alarm 1 (Hupenbefehl)				

Documentation structur: Standard
Source file: KO050722.ODA

Date 22.07.2005
Drawn LANG
Appr.
Norm

VSZ KOSICE

SIEMENS AG
ISALOOLS

Substation control system 6MB
Compact I/O unit:
Indications
Table

T = /BG 83
+
-S106
Page

Remarks | Date | Name | Orig./Repl. 1/Repl. by

Station: UW KOSICE
Device: EA15 EAG
Device type: 6MB5220-1

Output	Connect designation	Section	Bay	Logical device	Lower limit	Value text	Column section	Column bay	Column logical device	Column information	Column value text	Type of command	Entry in event list	Entry in alarm list	Entry in SML	Display in diag. as select. field	Archive	Operational indications	SW termination time in s	Checkback monit. time in s	Interlocking type:
1	3C1/3C2	R110	EA15	ODPOJOVAC Q2	SCHALTZUSTAND	8D4 vyp.	22	27	39	0	75	DC	O		N	PV	R	Y	0.6	20.0	SCHALTGERÄT
2	3C3/3C4	R110	EA15	ODPOJOVAC Q2	SCHALTZUSTAND	8D4 zap.	22	27	39	0	75	DC	O		N	PV	R	Y	0.6	20.0	SCHALTGERÄT
3	4C1/4C2	R110	EA15	ODPOJOVAC Q7	SCHALTZUSTAND	7D2 vyp.	22	27	39	0	75	DC	O		N	PV	R	Y	0.6	20.0	SCHALTGERÄT
4	4C3/4C4	R110	EA15	ODPOJOVAC Q7	SCHALTZUSTAND	7D2 zap.	22	27	39	0	75	DC	O		N	PV	R	Y	0.6	20.0	SCHALTGERÄT
5	4D1/4D2	R110	EA15	ODPOJOVAC POM.PRIP.Q71	SCHALTZUSTAND	7D4 vyp.	22	27	39	0	75	DC	O		N	PV	R	Y	0.6	20.0	SCHALTGERÄT
6	4D3/4D4	R110	EA15	ODPOJOVAC POM.PRIP.Q71	SCHALTZUSTAND	7D4 zap.	22	27	39	0	75	DC	O		N	PV	R	Y	0.6	20.0	SCHALTGERÄT
7	2D1/2D2	R110	EA15		KVITOVANIE	KON ZAC	22	27	0	39	75	SC	O	N	N	PV	R	N	0.6		SCHALTGERÄT
9	3E1/3E2	R110	EA15	ODPOJOVAC Q9	SCHALTZUSTAND	6D3 vyp.	22	27	39	0	75	DC	O		N	PV	R	Y	0.6	20.0	SCHALTGERÄT
10	3E3/3E4	R110	EA15	ODPOJOVAC Q9	SCHALTZUSTAND	6D3 zap.	22	27	39	0	75	DC	O		N	PV	R	Y	0.6	20.0	SCHALTGERÄT
11	4E1/4E2	R110	EA15	ODPOJOVAC Q1	SCHALTZUSTAND	5D1 vyp.	22	27	39	0	75	DC	O		N	PV	R	Y	0.6	20.0	SCHALTGERÄT
12	4E3/4E4	R110	EA15	ODPOJOVAC Q1	SCHALTZUSTAND	5D1 zap.	22	27	39	0	75	DC	O		N	PV	R	Y	0.6	20.0	SCHALTGERÄT
13	4F1/4F2	R110	EA15	ODPOJOVAC ZEMNIACI Q8	SCHALTZUSTAND	8FA vyp.	22	27	39	0	75	DC	O		N	PV	R	Y	0.6	20.0	SCHALTGERÄT
14	4F3/4F4	R110	EA15	ODPOJOVAC ZEMNIACI Q8	SCHALTZUSTAND	8FA zap.	22	27	39	0	75	DC	O		N	PV	R	Y	0.6	20.0	SCHALTGERÄT
15	2F1/2F2	R110	EA15		DEBLOKACIA BLOKOVANIA	KON ZAC	22	27	0	39	75	SC	R/C	N	N	PV	R/C	Y			SCHALTGERÄT

Proprietary data, company confidential. All rights reserved
Dados a título de secreto de empresa. Todos direitos reservados
Comunicado como segredo empresarial. Reservados todos os direitos.
Confiado como secreto industrial. Nos reservamos todos los derechos.

The reproduction, transmission or use of this document or its contents is not permitted without express written authority. Offenders will be liable for damages. All rights, including rights created by patent grant or registration of a utility model or design, are reserved.

Documentation structur: Standard
Source file: KO050722.ODA

Rev.	Remarks	Date	Name	Norm
			Date	22.07.2005
			Drawn	LANG
			Appr.	

VSZ KOSICE
Orig./Repl. 1/Repl. by

SIEMENS AG
ISAOOLS

Substation control system 6MB
Compact I/O unit:
Commands
Table

T = /BG 84
+
-S106
Page 84

Station: UW KOSICE
Device: EA15 EAG
Device type: 6MB5220-1

Output	Connect designation	Switch interlocking
1	3C1/3C2	
2	3C3/3C4	
3	4C1/4C2	
4	4C3/4C4	
5	4D1/4D2	
6	4D3/4D4	
7	2D1/2D2	
9	3E1/3E2	
10	3E3/3E4	
11	4E1/4E2	
12	4E3/4E4	
13	4F1/4F2	SCHALTVERRIEGELUNG Q8 bei UG1 L1
14	4F3/4F4	SCHALTVERRIEGELUNG Q8 bei UG1 L1
15	2F1/2F2	

Proprietary data, company confidential. All rights reserved.
Confie a tire de secret d'entreprise. Tous droits reservis.
Comunicado como segredo empresarial. Reservados todos os direitos.
Confiado como secreto industrial. Nos reservamos todos los derechos.

The reproduction, transmission or use of this document or its
is not permitted without expres written authority.
Offenders will be liable for damages. All rights, including rights
created by patent grant or registration of a utility model or design, are reserved

Documentation structur: Standard
Source file: KO050722.ODA

			Date	22.07.2005
			Drawn	LANG
			Appr.	
Remarks	Date	Name	Norm	

VSZ
KOSICE

Orig./Repl. 1/Repl. by

SIEMENS AG
ISAIOOLS

Substation control system 6MB
Compact I/O unit:
Commands
Table

T = /BG 85
+
-S106
Page

Station: UW KOSICE
Device: EA15 EAG
Device type: 6MB5220-1

Analog channel no.	Connect designation	Section	Bay	Logical device	Lower limit	Display value	Dimension	Zero suppression f. display in %	Text for display	Bay blockage	Thres val. for switchover in %	Process analog value in I/O uni	With live-zero monitoring	Display in diagram
1	STROM L2	R110	EA15	MESSWERTE STROM	PRUD L2	400.00	A	1.0	PRUD L2	N	0.0	N	PV	Y
2	STROM L1	R110	EA15	MESSWERTE STROM	PRUD L1	400.00	A	1.0	PRUD L1	N	0.0	N	PV	N
3	STROM L3	R110	EA15	MESSWERTE STROM	PRUD L3	400.00	A	1.0	PRUD L3	N	0.0	N	PV	N
4	UL1-UL2	R110	EA15	MESSWERTE SPANNUNG	NAPATIE L1-L2	110.00	KV	10.0	NAPATIE L1-L2	N	0.0	N	PV	Y
5	UL1-UL3	R110	EA15	MESSWERTE SPANNUNG	NAPATIE L1-L3	110.00	KV	10.0	NAPATIE L1-L3	N	0.0	N	PV	Y
6	UL2-UL3	R110	EA15	MESSWERTE SPANNUNG	NAPATIE L2-L3	110.00	KV	10.0	NAPATIE L2-L3	N	0.0	N	PV	Y
7	W-LEISTUNG	R110	EA15		VYKON CINNY	76.20	MW	1.0	VYKON CINNY	N	0.0	N	PV	Y
8	B-LEISTUNG	R110	EA15		VYKON JALOVY	76.20	MVar	1.0	VYKON JALOVY	N	0.0	N	PV	Y

Proprietary data, company confidential. All rights reserved
Confia a titre de secret d'entreprise. Tous droits réservés.
Comunicado como segredo empresarial. Reservados todos os direitos.
Confiado como secreto industrial. Nos reservamos todos los derechos.
The reproduction, transmission or use of this document or its contents is not permitted without expres written authority. Offenders will be liable for damages. All rights, including rights created by patent grant or registration of a utility model or design, are reserved

Documentation structur: Standard
Source file: KO050722.ODA

Rev.	Remarks	Date	Name	Norm	Date 22.07.2005	Drawn LANG	Appr.	Orig./Repl. 1/Repl. by

VSZ KOSICE

SIEMENS AG
ISATOOLS

Substation control system 6MB
Compact I/O unit:
Analog values
Table

T = /BG 86
+
-S106
Page 86

Station: UW KOSICE
Device: EA15 EAG
Device type: 6MB5220-1

Analog channel no.	Connect designation	Archive	Analog recording	Recording mode	No. of val. to be averaged	Scan interval in s	Analog value type	Max. value of analog value	Keep non-return pointer	Calculated demand value	Derive percentage value	Derive metered value
1	STROM L2	Y	PERM	Analog value direct		900	CUR	480.00	PV	PV	PV	PV
2	STROM L1	Y	PERM	Analog value direct		900	CUR	480.00	PV	PV	PV	PV
3	STROM L3	Y	PERM	Analog value direct		900	CUR	480.00	PV	PV	PV	PV
4	UL1-UL2	Y	PERM	Analog value direct		900	PPV	132.00	PV	PV	PV	PV
5	UL1-UL3	Y	PERM	Analog value direct		900	PPV	132.00	PV	PV	PV	PV
6	UL2-UL3	Y	PERM	Analog value direct		900	PPV	132.00	PV	PV	PV	PV
7	W-LEISTUNG	Y	PERM	Analog value direct		900	AP	91.45	PV	PV	PV	PV
8	B-LEISTUNG	Y	PERM	Analog value direct		900	RP	91.45	PV	PV	PV	PV

Proprietary data, company confidential. All rights reserved.
Confie a titre de secret d'entreprise. Tous droits r,serv,s.
Comunicado como segredo empresarial. Reservados todos os direitos.
Confiado como secreto industrial. Nos reservamos todos los derechos.

The reproduction, transmission or use of this document or its is not permitted without expres written authority.
Offenders will be liable for damages. All rights, including rights created by patent grant or registration of a utility model or design, are reserved

Documentation structur: Standard
Source file: KO050722.ODA

Remarks	Date	Name	Date	22.07.2005	VSZ KOSICE	SIEMENS AG ISA TOOLS	Substation control system 6MB
			Drawn	LANG			Compact I/O unit:
			Appr.				Analog values
			Norm		Orig./Repl. 1/Repl. by		Table

T = /BG 87
+
-S106
Page 7

Station: UW KOSICE
Device: EA15 EAG
Device type: 6MB5220-1

Analog channel no.	Connect designation	Static limit monitoring: Filtering time in s	Lower limit 1	Indication at lower limit 1	Lower limit 2	Indication at lower limit 2	Upper limit 1	Indication at higher limit 1	Upper limit 2	Indication at higher limit 2	Teletrans. FP raw val. Master station	Name of telegram	Name of info element
1	STROM L2	0					479.90	PRUD L2 HH1			IEC 870-5-101	Meßwerttelegramm	830
2	STROM L1	0					479.90	PRUD L1 HH1			IEC 870-5-101	Meßwerttelegramm	831
3	STROM L3	0					479.90	PRUD L3 HH1			IEC 870-5-101	Meßwerttelegramm	832
4	UL1-UL2	0	99.00	NAPATIE L1-L2 DH1	77.00	NAPATIE L1-L2 DH2	123.00	NAPATIE L1-L2 HH1			IEC 870-5-101	Meßwerttelegramm	833
5	UL1-UL3	0	99.00	NAPATIE L1-L3 DH1			123.00	NAPATIE L1-L3 HH1			IEC 870-5-101	Meßwerttelegramm	834
6	UL2-UL3	0	99.00	NAPATIE L2-L3 DH1			123.00	NAPATIE L2-L3 HH1			IEC 870-5-101	Meßwerttelegramm	835
7	W-LEISTUNG										IEC 870-5-101	Meßwerttelegramm	836
8	B-LEISTUNG										IEC 870-5-101	Meßwerttelegramm	837

Proprietary data, company confidential. All rights reserved.
Confie a titre de secret d'entreprise. Tous droits reservs.
Comunicado como segredo empresarial. Reservados todos os direitos.
Confiado como secreto industrial. Nos reservamos todos los derechos.
The reproduction, transmission or use of this document or its is not permitted without express written authority.
Offenders will be liable for damages. All rights, including rights created by patent grant or registration of a utility model or design, are reserved

Documentation structur: Standard
Source file: KO050722.ODA

Rev.	Remarks	Date	Name	Date 22.07.2005 / Drawn LANG / Appr. / Norm	VSZ KOSICE / Orig./Repl. 1/Repl. by	SIEMENS AG ISAOOLS	Substation control system 6MB / Compact I/O unit: / Analog values / Table	T = /BG 88 / + / -S106	Page 88

Proprietary data, company confidential. All rights reserved.
Confiaa a tine de secret d'entreprise. Tous droits r.serv.s.
Comunicado como segredo empresarial. Reservados todos os direitos.
Confiado como secreto industrial. Nos reservamos todos los derechos.

The reproduction, transmission or use of this document or its
is not permitted without expres written authority.
Offenders will be liable for damages. All rights, including rights
created by patent grant or registration of a utility model or design, are reserved

Station: UW KOSICE
Device: EA16 EAG
Device type: 6MB5220-1
Packet numbe 8
Version no.: 1

Connection:
Device: LZG
Subrack: LZG-BGT
Module: AST 1
UART: 2
MUX: 16

General definitions:

Rated auxiliary voltage:	60 V, 110 V, 125 V DC
LZG monitoring:	Indication
Ext. met. value tr. comm.:	No
LIVE contact:	No
Buffer type:	I/O unit normal
Timeout monitoring:	Yes

Scan cycle for ind. input:

Scan cycle for fault ind.:	10
Scan number 02:	10
Scan cycle for pos. ind.:	100
Scan number 03:	3
Scan cycle for op. ind.:	1000
Scan number 04:	1

Specifications for chatter dis

Analog interval in s:
Blockage time in s:
Number of test cycle
Number of block. cyc

Input	Connect designation	Section	Bay	Logical device	Lower limit	Value text	Column section	Column bay	Column logical device	Column information	Column value text	With command	Indication type	Entry in event list	Entry in alarm list	Acknowledge	Display in indication area	Indication class	Entry in SML	Display in diagram	Display of intermed. pos.	Acknowledge	Display under voltage level	Indication class	Archive	Operational indications	Protection indications	Filt. of raised & cleared	Filtering of intermed. pos.	Bay blockage
1	8D4	R110	EA16	ODPOJOVAC Q2	SCHALTZUSTAND	vyp.	22	27	39	0	75	LZM	DI	O					N	Y	N	O	Y	2	R	Y	N		N	N
2	7D1	R110	EA16	ODPOJOVAC Q2	SCHALTZUSTAND	zap.	22	27	39	0	75	LZM	DI	O					N	Y	N	O	Y	2	R	Y	N		N	N
3	7D2	R110	EA16	ODPOJOVAC Q1	SCHALTZUSTAND	vyp.	22	27	39	0	75	LZM	DI	O					N	Y	N	O	Y	2	R	Y	N		N	N
4	7D3	R110	EA16	ODPOJOVAC Q1	SCHALTZUSTAND	zap.	22	27	39	0	75	LZM	DI	O					N	Y	N	O	Y	2	R	Y	N		N	N
5	7D4																													
6	6D1																													
7	6D3																													
8	6D4																													
9	5D1																													
10	5D2																													
11	5D3																													
13	8FA																													
14	7F1	R110	EA16		8TK PORUCHA	KON ZAC	22	27	0	39	75	PV	SI	R/C	Y	R/C	Y	1	N	N					R/C	Y	N	N		N
15	7F2	R110	EA16		VYPN.VYPINAC.BEZ POVELU	KON ZAC	22	27	0	39	75	PV	TR	O	Y	O	Y	1	N	N					R	Y	N			N
16	7F3	R110	EA16		PREVADZKA S1	KON ZAC	22	27	0	39	75	PV	SI	R/C	Y	R/C	Y	1	N	Y		N	N		R/C	Y	N	N		N
17	7F4	R110	EA16		S5 POLOHA VYPN./MIESTNE	KON ZAC	22	27	0	39	75	PV	SI	R/C	Y	R/C	Y	1	N	Y		N	N		R/C	Y	N	N		N
18	6F1	R110	EA16		CHYBA OBSLUHY	KON ZAC	22	27	0	39	75	PV	SI	R/C	N				N	N					R/C	Y	N	N		N
19	6F3	R110	EA16		PREKROCENIE CASU BEHU	KON ZAC	22	27	0	39	75	PV	SI	R/C	N				N	N					R/C	Y	N	N		N
20	6F4																													
21	5F1	R110	EA16		STRATA js./st. NAPATI	KON ZAC	22	27	0	39	75	PV	SI	R/C	Y	R/C	Y	1	N	N					R/C	N	Y	N		N
22	5F2																													
23	5F3																													

Documentation structur: Standard
Source file: KO050722.ODA

Date	22.07.2005	VSZ KOSICE	SIEMENS AG ISAOOLS
Drawn	LANG		
Appr.			
Remarks	Date	Name Norm	Orig./Repl. 1/Repl. by

Substation control system 6MB
Compact I/O unit:
Indications
Table

T = /BG 89
+
-S106
Page

Proprietary data, company confidential. All rights reserved
Confia a tfne de secret dentreprise. Tous droits r.ser.v.s.
Comunicado como secreto empresarial Reservados todos os direitos.
Confiado como secreto industrial. Nos reservamos todos los derechos.

The reproduction, transmission or use of this document or its contents is not permitted without express written authority. Offenders will be liable for damages. All rights, including rights created by patent grant or registration of a utility model or design, are reserved.

Documentation structur: Standard
Source file: KO050722.ODA

Station: UW KOSICE
Device: EA16 EAG
Device type: 6MB5220-1
Packet numbe 8
Version no.: 1

Connection:
Device: LZG
Subrack: LZG-BGT
Module: AST 1
UART: 2
MUX: 16

General definitions:
Rated auxiliary voltage: 60 V, 110 V, 125 V DC
LZG monitoring: Indication
Ext. met. value tr. comm.: No
LIVE contact: No
Buffer type: I/O unit normal
Timeout monitoring: Yes

Scan cycle for ind. input:
Scan cycle for fault ind.: 10
Scan number 02: 10
Scan cycle for pos. ind.: 100
Scan number 03: 3
Scan cycle for op. ind.: 1000
Scan number 04: 1

Specifications for chatter dis
Analog interval in s:
Blockage time in s:
Number of test cycle
Number of block. cyc

Input	Connect designation	Monitored as feedback	Checkback monit. time in s	Command derivation	Indication derivation	Remote transmission FP: Master station	Name of telegram	Name of info element
1	8D4	Y	20.0			IEC 870-5-101	Meldungstelegramm DM	442
2	7D1	Y	20.0			IEC 870-5-101	Meldungstelegramm DM	442
3	7D2	Y	20.0			IEC 870-5-101	Meldungstelegramm DM	441
4	7D3	Y	20.0			IEC 870-5-101	Meldungstelegramm DM	441
5	7D4							
6	6D1							
7	6D3							
8	6D4							
9	5D1							
10	5D2							
11	5D3							
13	8FA							
14	7F1	N		Alarm 1 (Hupenbefehl)	KVIT 8TK			
15	7F2	N		Alarm 1 (Hupenbefehl)	KVIT 8TK			
16	7F3	N		Alarm 1 (Hupenbefehl)				
17	7F4	N		Alarm 1 (Hupenbefehl)				
18	6F1	N		Alarm 1 (Hupenbefehl)	KVIT 8TK			
19	6F3	N		Alarm 1 (Hupenbefehl)	KVIT 8TK			
20	6F4							
21	5F1	N		Alarm 1 (Hupenbefehl)				
22	5F2							
23	5F3							

Rev.	Remarks	Date	Name	Norm

Date 22.07.2005
Drawn LANG
Appr.

VSZ KOSICE
Orig./Repl. 1/Repl. by

SIEMENS AG
SAIOOLS

Substation control system 6MB
Compact I/O unit:
Indications
Table

T = /BG 90
+
-S106
Page 90

Station: UW KOSICE
Device: EA16 EAG
Device type: 6MB5220-1

Output	Connect designation	Section	Bay	Logical device	Lower limit	Value text		Column section	Column bay	Column logical device	Column information	Column value text	Type of command	Entry in event list	Entry in alarm list	Entry in SML	Display in diag. as select. field	Archive	Operational indications	SW termination time in s	Checkback monit. time in s	Interlocking type:
1	3C1/3C2	R110	EA16	ODPOJOVAC Q2	SCHALTZUSTAND	8D4	vyp.	22	27	39	0	75	DC	O		N	PV	R	Y	0.6	20.0	SCHALTGERÄT
2	3C3/3C4	R110	EA16	ODPOJOVAC Q2	SCHALTZUSTAND	8D4	zap.	22	27	39	0	75	DC	O		N	PV	R	Y	0.6	20.0	SCHALTGERÄT
3	4C1/4C2	R110	EA16	ODPOJOVAC Q1	SCHALTZUSTAND	7D2	vyp.	22	27	39	0	75	DC	O		N	PV	R	Y	0.6	20.0	SCHALTGERÄT
4	4C3/4C4	R110	EA16	ODPOJOVAC Q1	SCHALTZUSTAND	7D2	zap.	22	27	39	0	75	DC	O		N	PV	R	Y	0.6	20.0	SCHALTGERÄT
5	4D1/4D2																PV					
6	4D3/4D4																PV					
7	2D1/2D2	R110	EA16		KVITOVANIE	KON	ZAC	22	27	0	39	75	SC	O	N	N	PV	R	N	0.6		SCHALTGERÄT
9	3E1/3E2																PV					
10	3E3/3E4																PV					
11	4E1/4E2																PV					
12	4E3/4E4																PV					
13	4F1/4F2																PV					
14	4F3/4F4																PV					
15	2F1/2F2	R110	EA16		DEBLOKACIA BLOKOVANIA	KON	ZAC	22	27	0	39	75	SC	R/C	N	N	PV	R/C	Y			SCHALTGERÄT

Proprietary data, company confidential. All rights reserved.
Confia a título de secret d'entreprise. Tous droits reservés.
Comunicado como segredo empresarial. Reservados todos os direitos.
Confiado como secreto industrial. Nos reservamos todos los derechos.

The reproduction, transmission or use of this document or its contents is not permitted without express written authority. Offenders will be liable for damages. All rights, including rights created by patent grant or registration of a utility model or design, are reserved

Documentation structur: Standard
Source file: KO050722.ODA

Date	22.07.2005	VSZ KOSICE	SIEMENS AG ISATOOLS	Substation control system 6MB Compact I/O unit: Commands Table
Drawn	LANG			
Appr.				
Remarks	Date	Name Norm	Orig./Repl. 1/Repl. by	

T = /BG 91
+
-S106
Page 01

Station: UW KOSICE
Device: EA16 EAG
Device type: 6MB5220-1

Analog channel no.	Connect designation	Section	Bay	Logical device	Lower limit	Display value	Dimension	Zero suppression f. display in %	Text for display	Bay blockage	Thres val. for switchover in %	Process analog value in I/O uni	Knee point: Acquisition value in mA	Knee point: Display value	With live-zero monitoring	Display in diagram
1	STROM L2														PV	
2	STROM L1														PV	
3	STROM L3														PV	
4	UL1-UL2	R110	EA16	MESSWERTE SPANNUNG	NAPATIE L1-L2	110.00	KV	10.0	NAPATIE L1-L2	N	0.0	N			PV	Y
5	UL1-UL3	R110	EA16	MESSWERTE SPANNUNG	NAPATIE L1-L3	110.00	KV	10.0	NAPATIE L1-L3	N	0.0	N			PV	Y
6	UL2-UL3	R110	EA16	MESSWERTE SPANNUNG	NAPATIE L2-L3	110.00	KV	10.0	NAPATIE L2-L3	N	0.0	N			PV	Y
7	W-LEISTUNG	R110	EA16		FREKVENCIA W	55.00	Hz	10.0	FREKVENCIA W	N	0.0	N	0.00	45.00	PV	Y
8	B-LEISTUNG														PV	

Proprietary data, company confidential. All rights reserved.
Confia a ttre de secret d'entreprise. Tous droits reservs.
Comunicado como segredo empresarial. Reservados todos os direitos.
Contado como secreto industrial. Nos reservamos todos los derechos.

The reproduction, transmission or use of this document or its contents is not permitted without expres written authority.
Offenders will be liable for damages. All rights, including rights created by patent grant or registration of a utility model or design, are reserved.

Documentation structur: Standard
Source file: KO050722.ODA

Rev.	Remarks	Date	Name	Norm
			Date	22.07.2005
			Drawn	LANG
			Appr.	

VSZ KOSICE

Orig./Repl. 1/Repl. by

SIEMENS AG
SAOOLS

Substation control system 6MB
Compact I/O unit:
Analog values
Table

T = /BG 92
+
-S106
Page 92

Station: UW KOSICE
Device: EA16 EAG
Device type: 6MB5220-1

Analog channel no.	Connect designation	Archive	Analog recording	Recording mode	No. of val. to be averaged	Scan interval in s	Analog value type	Max. value of analog value	Keep non-return pointer	Calculated demand value	Derive percentage value	Derive metered value
1	STROM L2											PV
2	STROM L1											PV
3	STROM L3											PV
4	UL1-UL2	Y	PERM	Analog value direct		900	PPV	132.00	PV	PV	PV	PV
5	UL1-UL3	Y	PERM	Analog value direct		900	PPV	132.00	PV	PV	PV	PV
6	UL2-UL3	Y	PERM	Analog value direct		900	PPV	132.00	PV	PV	PV	PV
7	W-LEISTUNG	Y	PERM	Analog value direct		900	F	66.00	PV	PV	PV	PV
8	B-LEISTUNG											PV

Proprietary data, company confidential. All rights reserved.
Confiée à titre de secret d'entreprise. Tous droits réservés.
Comunicado como segredo empresarial. Reservados todos os direitos.
Confiado como secreto industrial. Nos reservamos todos los derechos.

The reproduction, transmission or use of this document or its contents is not permitted without express written authority. Offenders will be liable for damages. All rights, including rights created by patent grant or registration of a utility model or design, are reserved.

Documentation structure: Standard
Source file: KO050722.ODA

Remarks	Date	Name	Norm		
			Date	22.07.2005	
			Drawn	LANG	
			Appr.		

VSZ KOSICE
Orig./Repl. 1/Repl. by

SIEMENS AG
ISA TOOLS

Substation control system 6MB
Compact I/O unit:
Analog values
Table

T = /BG 93
+
-S106
Page

Station: UW KOSICE
Device: EA16 EAG
Device type: 6MB5220-1

Analog channel no.	Connect designation	Static limit monitoring: Filtering time in s	Lower limit 1	Indication at lower limit 1	Lower limit 2	Indication at lower limit 2	Upper limit 1	Indication at higher limit 1	Upper limit 2	Indication at higher limit 2	Teletrans. FP raw val. Master station	Name of telegram	Name of info element
1	STROM L2												
2	STROM L1												
3	STROM L3												
4	UL1-UL2	0	99.00	NAPATIE L1-L2 DH1	5.50	NAPATIE L1-L2 DH2	121.00	NAPATIE L1-L2 HH1			IEC 870-5-101	Meßwerttelegramm	840
5	UL1-UL3	0	99.00	NAPATIE L1-L3 DH1			121.00	NAPATIE L1-L3 HH1			IEC 870-5-101	Meßwerttelegramm	841
6	UL2-UL3	0	99.00	NAPATIE L2-L3 DH1			121.00	NAPATIE L2-L3 HH1			IEC 870-5-101	Meßwerttelegramm	842
7	W-LEISTUNG										IEC 870-5-101	Meßwerttelegramm	843
8	B-LEISTUNG												

Proprietary data, company confidential. All rights reserved.
Confie a titre de secret d'entreprise. Tous droits r.serv.s.
Comunicado como segredo empresarial. Reservados todos os direitos.
Confiado como secreto industrial. Nos reservamos todos los derechos.
The reproduction, transmission or use of this document or its is not permitted without express written authority.
Offenders will be liable for damages. All rights, including rights created by patent grant or registration of a utility model or design, are reserved.

Documentation structur: Standard
Source file: KO050722.ODA

Rev.	Remarks	Date	Name	Date	22.07.2005	VSZ KOSICE	SIEMENS AG ISAOOLS	Substation control system 6MB Compact I/O unit: Analog values Table	T = /BG 94 + -S106 Page 94
				Drawn	LANG				
				Appr.					
				Norm		Orig./Repl. 1/Repl. by			

Proprietary data, company confidential. All rights reserved.
Confia a tire de secret dentreprise. Tous droits r.serv.s.
Comunicado como segredo empresarial. Reservados todos os direitos.
Confiado como secreto industrial. Nos reservamos todos los derechos.
The reproduction, transmission or use of this document or its is not permitted without expres written authority.
Offenders will be liable for damages. All rights, including rights created by patent grant or registration of a utility model or design, are reserved

Station: UW KOSICE
Device: EA17 EAG
Device type: 6MB5220-1
Packet numbe 8
Version no.: 1

Connection:
Device: LZG
Subrack: LZG-BGT
Module: AST 2
UART: 2
MUX: 1

General definitions:

Rated auxiliary voltage: 60 V, 110 V, 125 V DC
LZG monitoring: Indication
Ext. met. value tr. comm.: No
LIVE contact: No
Buffer type: I/O unit normal
Timeout monitoring: Yes

Scan cycle for ind. input:

Scan cycle for fault ind.: 10
Scan number 02: 10
Scan cycle for pos. ind.: 100
Scan number 03: 3
Scan cycle for op. ind.: 1000
Scan number 04: 1

Specifications for chatter dis

Analog interval in s:
Blockage time in s:
Number of test cycle
Number of block. cyc

Input	Connect designation	Section	Bay	Logical device	Lower limit	Value text	Column section	Column bay	Column logical device	Column information	Column value text	With command	Indication type	Entry in event list	Entry in alarm list	Acknowledge	Display in indication area	Indication class	Entry in SML	Display in diagram	Display of intermed. pos.	Acknowledge	Display under voltage level	Indication class	Archive	Operational indications	Protection indications
1	8D4	R110	EA17	ODPOJOVAC Q2	SCHALTZUSTAND	vyp.	22	27	39	0	75	LZM	DI	O					N	Y	N	O	Y	2	R	Y	N
2	7D1	R110	EA17	ODPOJOVAC Q2	SCHALTZUSTAND	zap.	22	27	39	0	75	LZM	DI	O					N	Y	N	O	Y	2	R	Y	N
3	7D2	R110	EA17	ODPOJOVAC Q7	SCHALTZUSTAND	vyp.	22	27	39	0	75	LZM	DI	O					N	Y	N	O	Y	2	R	Y	N
4	7D3	R110	EA17	ODPOJOVAC Q7	SCHALTZUSTAND	zap.	22	27	39	0	75	LZM	DI	O					N	Y	N	O	Y	2	R	Y	N
5	7D4	R110	EA17	VYPINAC Q0	SCHALTZUSTAND	vyp.	22	27	39	0	75	LZM	DI	O					N	Y	N	O	Y	2	R	Y	N
6	6D1	R110	EA17	VYPINAC Q0	SCHALTZUSTAND	zap.	22	27	39	0	75	LZM	DI	O					N	Y	N	O	Y	2	R	Y	N
7	6D3	R110	EA17	ODPOJOVAC Q9	SCHALTZUSTAND	vyp.	22	27	39	0	75	LZM	DI	O					N	Y	N	O	Y	2	R	Y	N
8	6D4	R110	EA17	ODPOJOVAC Q9	SCHALTZUSTAND	zap.	22	27	39	0	75	LZM	DI	O					N	Y	N	O	Y	2	R	Y	N
9	5D1	R110	EA17	ODPOJOVAC Q1	SCHALTZUSTAND	vyp.	22	27	39	0	75	LZM	DI	O					N	Y	N	O	Y	2	R	Y	N
10	5D2	R110	EA17	ODPOJOVAC Q1	SCHALTZUSTAND	zap.	22	27	39	0	75	LZM	DI	O					N	Y	N	O	Y	2	R	Y	N
11	5D3	R110	EA17		8TK PORUCHA	KON ZAC	22	27	0	39	75	PV	SI	R/C	Y	R/C	Y	1	N	N					R/C	Y	N
13	8FA	R110	EA17	ODPOJOVAC ZEMNIACI Q8	SCHALTZUSTAND	vyp.	22	27	39	0	75	LZM	DI	O					N	Y	N	O	Y	2	R	Y	N
14	7F1	R110	EA17	ODPOJOVAC ZEMNIACI Q8	SCHALTZUSTAND	zap.	22	27	39	0	75	LZM	DI	O					N	Y	N	O	Y	2	R	Y	N
15	7F2	R110	EA17		VYPN.VYPINAC.BEZ POVELU	KON ZAC	22	27	0	39	75	PV	TR	O	Y	O	Y	1	N	N					R	Y	N
16	7F3	R110	EA17		PREVADZKA S1	KON ZAC	22	27	0	39	75	PV	SI	R/C	Y	R/C	Y	1	N	Y		N	N		R/C	Y	N
17	7F4	R110	EA17		S5 POLOHA VYPN./MIESTNE	KON ZAC	22	27	0	39	75	PV	SI	R/C	Y	R/C	Y	1	N	Y		N	N		R/C	Y	N
18	6F1	R110	EA17		CHYBA OBSLUHY	KON ZAC	22	27	0	39	75	PV	SI	R/C	N				N	N					R/C	Y	N
19	6F3	R110	EA17		PREKROCENIE CASU BEHU	KON ZAC	22	27	0	39	75	PV	SI	R/C	N				N	N					R/C	Y	N
20	6F4	R110	EA17		PORUCHA VYPINACA	KON ZAC	22	27	0	39	75	PV	SI	R/C	Y	R/C	Y	1	N	N					R/C	N	Y
21	5F1	R110	EA17		STRATA js./st. NAPATI	KON ZAC	22	27	0	39	75	PV	SI	R/C	Y	R/C	Y	1	N	N					R/C	N	Y
22	5F2																										
23	5F3																										

Documentation structur: Standard
Source file: KO050722.ODA

Remarks	Date	Name	Norm	Orig./Repl. 1/Repl. by

Date 22.07.2005
Drawn LANG
Appr.

VSZ KOSICE

SIEMENS AG
ISATOOLS

Substation control system 6MB
Compact I/O unit:
Indications
Table

T = /BG 95
+

-S106

Page

Station: UW KOSICE
Device: EA17 EAG
Device type: 6MB5220-1
Packet numbe 8
Version no.: 1

Connection:
Device: LZG
Subrack: LZG-BGT
Module: AST 2
UART: 2
MUX: 1

General definitions:
Rated auxiliary voltage: 60 V, 110 V, 125 V DC
LZG monitoring: Indication
Ext. met. value tr. comm.: No
LIVE contact: No
Buffer type: I/O unit normal
Timeout monitoring: Yes

Scan cycle for ind. input:
Scan cycle for fault ind.: 10
Scan number 02: 10
Scan cycle for pos. ind.: 100
Scan number 03: 3
Scan cycle for op. ind.: 1000
Scan number 04: 1

Specifications for chatter dis
Analog interval in s:
Blockage time in s:
Number of test cycle
Number of block. cyc

Input	Connect designation	Filt. of raised & cleared	Filtering of intermed. pos.	Bay blockage	Monitored as feedback	Checkback monit. time in s	Command derivation	Indication derivation	Remote transmission FP: Master station	Name of telegram	Name of info element
1	8D4		N	N	Y	20.0			IEC 870-5-101	Meldungstelegramm DM	452
2	7D1		N	N	Y	20.0			IEC 870-5-101	Meldungstelegramm DM	452
3	7D2		N	N	Y	20.0			IEC 870-5-101	Meldungstelegramm DM	453
4	7D3		N	N	Y	20.0			IEC 870-5-101	Meldungstelegramm DM	453
5	7D4		N	N	Y	1.0			IEC 870-5-101	Meldungstelegramm DM	450
6	6D1		N	N	Y	1.0			IEC 870-5-101	Meldungstelegramm DM	450
7	6D3		N	N	Y	20.0			IEC 870-5-101	Meldungstelegramm DM	455
8	6D4		N	N	Y	20.0			IEC 870-5-101	Meldungstelegramm DM	455
9	5D1		N	N	Y	20.0			IEC 870-5-101	Meldungstelegramm DM	451
10	5D2		N	N	Y	20.0			IEC 870-5-101	Meldungstelegramm DM	451
11	5D3	N		N	N		Alarm 1 (Hupenbefehl)	KVIT 8TK			
13	8FA		N	N	Y	20.0			IEC 870-5-101	Meldungstelegramm DM	454
14	7F1		N	N	Y	20.0			IEC 870-5-101	Meldungstelegramm DM	454
15	7F2			N	N		Alarm 1 (Hupenbefehl)	KVIT 8TK			
16	7F3	N		N	N		Alarm 1 (Hupenbefehl)				
17	7F4	N		N	N		Alarm 1 (Hupenbefehl)				
18	6F1	N		N	N		Alarm 1 (Hupenbefehl)	KVIT 8TK			
19	6F3	N		N	N		Alarm 1 (Hupenbefehl)	KVIT 8TK			
20	6F4	N		N	N		Alarm 1 (Hupenbefehl)				
21	5F1	N		N	N		Alarm 1 (Hupenbefehl)				
22	5F2										
23	5F3										

Proprietary data, company confidential. All rights reserved.
Confie a titre de secret d'entreprise. Tous droits r.serv.s.
Comunicado como segredo empresarial. Reservados todos os direitos.
Confiado como secreto industrial. Nos reservamos todos los derechos.
The reproduction, transmission or use of this document or its is not permitted without express written authority.
Offenders will be liable for damages. All rights, including rights created by patent grant or registration of a utility model or design, are reserved

Documentation structur: Standard
Source file: KO050722.ODA

Rev.	Remarks	Date	Name	Date	22.07.2005	VSZ KOSICE	SIEMENS AG ISAOOLS	Substation control system 6MB
				Drawn	LANG			Compact I/O unit:
				Appr.				Indications
				Norm		Orig./Repl. 1/Repl. by		Table

T = /BG 96
+
-S106
Page 96

Station: UW KOSICE
Device: EA17 EAG
Device type: 6MB5220-1

Output	Connect designation	Section	Bay	Logical device	Lower limit	Value text	Column section	Column bay	Column logical device	Column information	Column value text	Type of command	Entry in event list	Entry in alarm list	Entry in SML	Display in diag. as select. field	Archive	Operational indications	SW termination time in s	Checkback monit. time in s	Interlocking type:
1	3C1/3C2	R110	EA17	ODPOJOVAC Q2	SCHALTZUSTAND	8D4 vyp.	22	27	39	0	75	DC	O		N	PV	R	Y	0.6	20.0	SCHALTGERÄT
2	3C3/3C4	R110	EA17	ODPOJOVAC Q2	SCHALTZUSTAND	8D4 zap.	22	27	39	0	75	DC	O		N	PV	R	Y	0.6	20.0	SCHALTGERÄT
3	4C1/4C2	R110	EA17	ODPOJOVAC Q7	SCHALTZUSTAND	7D2 vyp.	22	27	39	0	75	DC	O		N	PV	R	Y	0.6	20.0	SCHALTGERÄT
4	4C3/4C4	R110	EA17	ODPOJOVAC Q7	SCHALTZUSTAND	7D2 zap.	22	27	39	0	75	DC	O		N	PV	R	Y	0.6	20.0	SCHALTGERÄT
5	4D1/4D2	R110	EA17	VYPINAC Q0	SCHALTZUSTAND	7D4 vyp.	22	27	39	0	75	DC	O		N	PV	R	Y	0.6	1.0	SCHALTGERÄT
6	4D3/4D4	R110	EA17	VYPINAC Q0	SCHALTZUSTAND	7D4 zap.	22	27	39	0	75	DC	O		N	PV	R	Y	0.6	1.0	SCHALTGERÄT
7	2D1/2D2	R110	EA17		KVITOVANIE	KON ZAC	22	27	0	39	75	SC	O	N	N	PV	R	N	0.6		SCHALTGERÄT
9	3E1/3E2	R110	EA17	ODPOJOVAC Q9	SCHALTZUSTAND	6D3 vyp.	22	27	39	0	75	DC	O		N	PV	R	Y	0.6	20.0	SCHALTGERÄT
10	3E3/3E4	R110	EA17	ODPOJOVAC Q9	SCHALTZUSTAND	6D3 zap.	22	27	39	0	75	DC	O		N	PV	R	Y	0.6	20.0	SCHALTGERÄT
11	4E1/4E2	R110	EA17	ODPOJOVAC Q1	SCHALTZUSTAND	5D1 vyp.	22	27	39	0	75	DC	O		N	PV	R	Y	0.6	20.0	SCHALTGERÄT
12	4E3/4E4	R110	EA17	ODPOJOVAC Q1	SCHALTZUSTAND	5D1 zap.	22	27	39	0	75	DC	O		N	PV	R	Y	0.6	20.0	SCHALTGERÄT
13	4F1/4F2	R110	EA17	ODPOJOVAC ZEMNIACI Q8	SCHALTZUSTAND	8FA vyp.	22	27	39	0	75	DC	O		N	PV	R	Y	0.6	20.0	SCHALTGERÄT
14	4F3/4F4	R110	EA17	ODPOJOVAC ZEMNIACI Q8	SCHALTZUSTAND	8FA zap.	22	27	39	0	75	DC	O		N	PV	R	Y	0.6	20.0	SCHALTGERÄT
15	2F1/2F2	R110	EA17		DEBLOKACIA BLOKOVANIA	KON ZAC	22	27	0	39	75	SC	R/C	N	N	PV	R/C	Y			SCHALTGERÄT

Proprietary data, company confidential. All rights reserved.
Confie a titre de secret d'entreprise. Tous droits reservs.
Comunicado como segredo empresarial. Reservados todos os direitos.
Confiado como secreto industrial. Nos reservamos todos los derechos.
The reproduction, transmission or use of this document or its is not permitted without expres written authority.
Offenders will be liable for damages. All rights, including rights created by patent grant or registration of a utility model or design, are reserved

Documentation structur: Standard
Source file: KO050722.ODA

Remarks	Date	Name	Norm	Date	22.07.2005	VSZ KOSICE	SIEMENS AG ISAIOOLS	Substation control system 6MB	T = /BG 97
				Drawn	LANG			Compact I/O unit:	+
				Appr.				Commands	-S106 Page
						Orig./Repl. 1/Repl. by		Table	

Station: UW KOSICE
Device: EA17 EAG
Device type: 6MB5220-1

Output	Connect designation	Switch interlocking
1	3C1/3C2	
2	3C3/3C4	
3	4C1/4C2	
4	4C3/4C4	
5	4D1/4D2	
6	4D3/4D4	
7	2D1/2D2	
9	3E1/3E2	
10	3E3/3E4	
11	4E1/4E2	
12	4E3/4E4	
13	4F1/4F2	SCHALTVERRIEGELUNG Q8 bei UG1 L1
14	4F3/4F4	SCHALTVERRIEGELUNG Q8 bei UG1 L1
15	2F1/2F2	

Proprietary data, company confidential. All rights reserved.
Confie a titre de secret d'entreprise. Tous droits réservés.
Comunicado como segredo empresarial. Reservados todos os direitos.
Confiado como secreto industrial. Nos reservamos todos los derechos.
The reproduction, transmission or use of this document or its is not permitted without express written authority.
Offenders will be liable for damages. All rights, including rights created by patent grant or registration of a utility model or design, are reserved

Documentation structur: Standard
Source file: KO050722.ODA

Rev.	Remarks	Date	Name	Date	22.07.2005
				Drawn	LANG
				Appr.	
				Norm	

VSZ
KOSICE

Orig./Repl. 1/Repl. by

SIEMENS AG
ISA TOOLS

Substation control system 6MB
Compact I/O unit:
Commands
Table

T = /BG 98
+
-S106
Page 98

Station: UW KOSICE
Device: EA17 EAG
Device type: 6MB5220-1

Analog channel no.	Connect designation	Section	Bay	Logical device	Lower limit	Display value	Dimension	Zero suppression f. display in %	Text for display	Bay blockage	Thres val. for switchover in %	Process analog value in I/O uni	With live-zero monitoring	Display in diagram
1	STROM L2	R110	EA17	MESSWERTE STROM	PRUD L2	200.00	A	1.0	PRUD L2	N	0.0	N	PV	Y
2	STROM L1	R110	EA17	MESSWERTE STROM	PRUD L1	200.00	A	1.0	PRUD L1	N	0.0	N	PV	N
3	STROM L3	R110	EA17	MESSWERTE STROM	PRUD L3	200.00	A	1.0	PRUD L3	N	0.0	N	PV	N
4	UL1-UL2	R110	EA17	MESSWERTE SPANNUNG	NAPATIE L1	63.50	KV	10.0	NAPATIE L1	N	0.0	N	PV	Y
5	UL1-UL3												PV	
6	UL2-UL3												PV	
7	W-LEISTUNG	R110	EA17		VYKON CINNY	38.10	MW	1.0	VYKON CINNY	N	0.0	N	PV	Y
8	B-LEISTUNG												PV	

The reproduction, transmission or use of this document or its is not permitted without express written authority. Offenders will be liable for damages. All rights, including rights created by patent grant or registration of a utility model or design, are reserved. Proprietary data, company confidential. All rights reserved. Confiance a titre de secret d'entreprise. Tous droits reservés. Comunicado como segredo empresarial. Reservados todos os direitos. Confiado como secreto industrial. Nos reservamos todos los derechos.

Documentation structur: Standard
Source file: KO050722.ODA

Remarks	Date	Name	Date	22.07.2005
			Drawn	LANG
			Appr.	
			Norm	

VSZ
KOSICE

Orig./Repl. 1/Repl. by

SIEMENS AG
ISA TOOLS

Substation control system 6MB
Compact I/O unit:
Analog values
Table

T = /BG 99
+
-S106
Page 99

Station: UW KOSICE
Device: EA17 EAG
Device type: 6MB5220-1

Analog channel no.	Connect designation	Archive	Analog recording	Recording mode	No. of val. to be averaged	Scan interval in s	Analog value type	Max. value of analog value	Keep non-return pointer	Calculated demand value	Derive percentage value	Derive metered value	Static limit monitoring: Filtering time in s	Lower limit 1	Indication at lower limit 1	Lower limit 2	Indication at lower limit 2	Upper limit 1	Indication at higher limit 1	Upper limit 2	Indication at higher limit 2
1	STROM L2	Y	PERM	Analog value direct		900	CUR	240.00	PV	PV	PV	PV	0					239.90	PRUD L2 HH1		
2	STROM L1	Y	PERM	Analog value direct		900	CUR	240.00	PV	PV	PV	PV	0					239.90	PRUD L1 HH1		
3	STROM L3	Y	PERM	Analog value direct		900	CUR	240.00	PV	PV	PV	PV	0					239.90	PRUD L3 HH1		
4	UL1-UL2	Y	PERM	Analog value direct		900	PV	76.21	PV	PV	PV	PV	0	57.15	NAPATIE L1 DH1	44.45	NAPATIE L1 DH2	69.85	NAPATIE L1 HH1		
5	UL1-UL3											PV									
6	UL2-UL3											PV									
7	W-LEISTUNG	Y	PERM	Analog value direct		900	AP	45.72	PV	PV	PV	PV									
8	B-LEISTUNG											PV									

Proprietary data, company confidential. All rights reserved.
Confidential secret d'entreprise. Tous droits réservés.
Comunicado como segredo empresarial. Reservados todos os direitos.
Confiado como secreto industrial. Nos reservamos todos los derechos.

The reproduction, transmission or use of this document or its contents is not permitted without express written authority. Offenders will be liable for damages. All rights, including rights created by patent grant or registration of a utility model or design, are reserved.

Documentation structur: Standard
Source file: KO050722.ODA

Rev.	Remarks	Date	Name	Norm

Date 22.07.2005
Drawn LANG
Appr.
Orig./Repl. 1/Repl. by

VSZ KOSICE

SIEMENS AG
ISATOOLS

Substation control system 6MB
Compact I/O unit:
Analog values
Table

T = /BG 100
+
-S106
Page 100

Station: UW KOSICE
Device: EA17 EAG
Device type: 6MB5220-1

Analog channel no.	Connect designation	Teletrans. FP raw val. Master station	Name of telegram	Name of info element
1	STROM L2	IEC 870-5-101	Meßwerttelegramm	850
2	STROM L1	IEC 870-5-101	Meßwerttelegramm	851
3	STROM L3	IEC 870-5-101	Meßwerttelegramm	852
4	UL1-UL2	IEC 870-5-101	Meßwerttelegramm	853
5	UL1-UL3			
6	UL2-UL3			
7	W-LEISTUNG	IEC 870-5-101	Meßwerttelegramm	854
8	B-LEISTUNG			

Proprietary data, company confidential. All rights reserved.
Confiée à titre de secret d'entreprise. Tous droits réservés.
Comunicado como segredo empresarial. Reservados todos os direitos
Confiado como secreto industrial. Nos reservamos todos los derechos

The reproduction, transmission or use of this document or its contents is not permitted without express written authority. Offenders will be liable for damages. All rights, including rights created by patent grant or registration of a utility model or design, are reserved

Documentation structur: Standard
Source file: KO050722.ODA

Remarks	Date	Name	Norm

Date	22.07.2005	VSZ KOSICE
Drawn	LANG	
Appr.		
		Orig./Repl. 1/Repl. by

SIEMENS AG
ISAOOLS

Substation control system 6MB
Compact I/O unit:
Analog values
Table

T = /BG 101
+
-S106
Page

Proprietary data, company confidential. All rights reserved.
Confia a titre de secret d'entreprise. Tous droits réservés.
Comunicado como secreto empresarial. Reservados todos os direitos.
Confiado como secreto industrial. Nos reservamos todos los derechos.

The reproduction, transmission or use of this document or its contents is not permitted without express written authority. Offenders will be liable for damages. All rights, including rights created by patent grant or registration of a utility model or design, are reserved.

Station: UW KOSICE
Device: EA18 EAG
Device type: 6MB5220-1
Packet numbe 8
Version no.: 1

Connection:
Device: LZG
Subrack: LZG-BGT
Module: AST 2
UART: 2
MUX: 2

General definitions:

Rated auxiliary voltage: 60 V, 110 V, 125 V DC
LZG monitoring: Indication
Ext. met. value tr. comm.: No
LIVE contact: No
Buffer type: I/O unit normal
Timeout monitoring: Yes

Scan cycle for ind. input:

Scan cycle for fault ind.: 10
Scan number 02: 10
Scan cycle for pos. ind.: 100
Scan number 03: 3
Scan cycle for op. ind.: 1000
Scan number 04: 1

Specifications for chatter dis

Analog interval in s:
Blockage time in s:
Number of test cycle
Number of block. cyc

Input	Connect designation	Section	Bay	Logical device	Lower limit	Value text	Column section	Column bay	Column logical device	Column information	Column value text	With command	Indication type	Entry in event list	Entry in alarm list	Acknowledge	Display in indication area	Indication class	Entry in SML	Display in diagram	Display of intermed. pos.	Acknowledge	Display under voltage level	Indication class	Archive	Operational indications	Protection indications
1	8D4	R110	EA18	ODPOJOVAC Q2	SCHALTZUSTAND	vyp.	22	27	39	0	75	LZM	DI	O					N	Y	N	O	Y	2	R	Y	N
2	7D1	R110	EA18	ODPOJOVAC Q2	SCHALTZUSTAND	zap.	22	27	39	0	75	LZM	DI	O					N	Y	N	O	Y	2	R	Y	N
3	7D2	R110	EA18	ODPOJOVAC Q7	SCHALTZUSTAND	vyp.	22	27	39	0	75	LZM	DI	O					N	Y	N	O	Y	2	R	Y	N
4	7D3	R110	EA18	ODPOJOVAC Q7	SCHALTZUSTAND	zap.	22	27	39	0	75	LZM	DI	O					N	Y	N	O	Y	2	R	Y	N
5	7D4																										
6	6D1																										
7	6D3	R110	EA18	ODPOJOVAC Q9	SCHALTZUSTAND	vyp.	22	27	39	0	75	LZM	DI	O					N	Y	N	O	Y	2	R	Y	N
8	6D4	R110	EA18	ODPOJOVAC Q9	SCHALTZUSTAND	zap.	22	27	39	0	75	LZM	DI	O					N	Y	N	O	Y	2	R	Y	N
9	5D1	R110	EA18	ODPOJOVAC Q1	SCHALTZUSTAND	vyp.	22	27	39	0	75	LZM	DI	O					N	Y	N	O	Y	2	R	Y	N
10	5D2	R110	EA18	ODPOJOVAC Q1	SCHALTZUSTAND	zap.	22	27	39	0	75	LZM	DI	O					N	Y	N	O	Y	2	R	Y	N
11	5D3	R110	EA18		8TK PORUCHA	KON ZAC	22	27	0	39	75	PV	SI	R/C	Y	R/C	Y	1	N	N					R/C	Y	N
13	8FA	R110	EA18	ODPOJOVAC ZEMNIACI Q8	SCHALTZUSTAND	vyp.	22	27	39	0	75	LZM	DI	O					N	Y	N	O	Y	2	R	Y	N
14	7F1	R110	EA18	ODPOJOVAC ZEMNIACI Q8	SCHALTZUSTAND	zap.	22	27	39	0	75	LZM	DI	O					N	Y	N	O	Y	2	R	Y	N
15	7F2	R110	EA18		VYPN.VYPINAC.BEZ POVELU	KON ZAC	22	27	0	39	75	PV	TR	O	Y	O	Y	1	N	N					R	Y	N
16	7F3	R110	EA18		PREVADZKA S1	KON ZAC	22	27	0	39	75	PV	SI	R/C	Y	R/C	Y	1	N	Y		N	N		R/C	Y	N
17	7F4	R110	EA18		S5 POLOHA VYPN./MIESTNE	KON ZAC	22	27	0	39	75	PV	SI	R/C	Y	R/C	Y	1	N	Y		N	N		R/C	Y	N
18	6F1	R110	EA18		CHYBA OBSLUHY	KON ZAC	22	27	0	39	75	PV	SI	R/C	N				N	N					R/C	Y	N
19	6F3	R110	EA18		PREKROCENIE CASU BEHU	KON ZAC	22	27	0	39	75	PV	SI	R/C	N				N	N					R/C	Y	N
20	6F4	R110	EA18		PORUCHA VYPINACA	KON ZAC	22	27	0	39	75	PV	SI	R/C	Y	R/C	Y	1	N	N					R/C	N	Y
21	5F1	R110	EA18		STRATA js./st. NAPATI	KON ZAC	22	27	0	39	75	PV	SI	R/C	Y	R/C	Y	1	N	N					R/C	N	Y
22	5F2																										
23	5F3																										

Proprietary data, company confidential. All rights reserved.
Confie a titre de secret d'entreprise. Tous droits reservis.
Comunicado como secreto empresarial. Reservados todos os direitos.
Confiado como secreto industrial. Nos reservamos todos los derechos.
The reproduction, transmission or use of this document or its contents is not permitted without express written authority. Offenders will be liable for damages. All rights, including rights created by patent grant or registration of a utility model or design, are reserved.

Station: UW KOSICE
Device: EA18 EAG
Device type: 6MB5220-1
Packet numbe 8
Version no.: 1

Connection:
Device: LZG
Subrack: LZG-BGT
Module: AST 2
UART: 2
MUX: 2

General definitions:

Rated auxiliary voltage:	60 V, 110 V, 125 V DC
LZG monitoring:	Indication
Ext. met. value tr. comm.:	No
LIVE contact:	No
Buffer type:	I/O unit normal
Timeout monitoring:	Yes

Scan cycle for ind. input:

Scan cycle for fault ind.:	10
Scan number 02:	10
Scan cycle for pos. ind.:	100
Scan number 03:	3
Scan cycle for op. ind.:	1000
Scan number 04:	1

Specifications for chatter dis

Analog interval in s:
Blockage time in s:
Number of test cycle
Number of block. cyc

Input	Connect designation	Filt. of raised & cleared	Filtering of intermed. pos.	Bay blockage	Monitored as feedback	Checkback monit. time in s	Command derivation	Indication derivation	Remote transmission FP: Master station	Name of telegram	Name of info element
1	8D4		N	N	Y	20.0			IEC 870-5-101	Meldungstelegramm DM	462
2	7D1		N	N	Y	20.0			IEC 870-5-101	Meldungstelegramm DM	462
3	7D2		N	N	Y	20.0			IEC 870-5-101	Meldungstelegramm DM	463
4	7D3		N	N	Y	20.0			IEC 870-5-101	Meldungstelegramm DM	463
5	7D4										
6	6D1										
7	6D3		N	N	Y	20.0			IEC 870-5-101	Meldungstelegramm DM	465
8	6D4		N	N	Y	20.0			IEC 870-5-101	Meldungstelegramm DM	465
9	5D1		N	N	Y	20.0			IEC 870-5-101	Meldungstelegramm DM	461
10	5D2		N	N	Y	20.0			IEC 870-5-101	Meldungstelegramm DM	461
11	5D3	N		N	N		Alarm 1 (Hupenbefehl)	KVIT 8TK			
13	8FA		N	N	N	Y	20.0		IEC 870-5-101	Meldungstelegramm DM	464
14	7F1		N	N	Y	20.0			IEC 870-5-101	Meldungstelegramm DM	464
15	7F2			N	N		Alarm 1 (Hupenbefehl)	KVIT 8TK			
16	7F3	N		N	N		Alarm 1 (Hupenbefehl)				
17	7F4	N		N	N		Alarm 1 (Hupenbefehl)				
18	6F1	N		N	N		Alarm 1 (Hupenbefehl)	KVIT 8TK			
19	6F3	N		N	N		Alarm 1 (Hupenbefehl)	KVIT 8TK			
20	6F4	N		N	N		Alarm 1 (Hupenbefehl)				
21	5F1	N		N	N		Alarm 1 (Hupenbefehl)				
22	5F2										
23	5F3										

Documentation structur: Standard
Source file: KO050722.ODA

Date	22.07.2005	VSZ KOSICE	SIEMENS AG ISATOOLS
Drawn	LANG		
Appr.			
Remarks	Date	Name Norm	Orig./Repl. 1/Repl. by

Substation control system 6MB
Compact I/O unit:
Indications
Table

T = /BG 103
+
-S106
Page

Station: UW KOSICE
Device: EA18 EAG
Device type: 6MB5220-1

Output	Connect designation	Section	Bay	Logical device	Lower limit	Value text	Column section	Column bay	Column logical device	Column information	Column value text	Type of command	Entry in event list	Entry in alarm list	Entry in SML	Display in diag. as select. field	Archive	Operational indications	SW termination time in s	Checkback monit. time in s	Interlocking type:
1	3C1/3C2	R110	EA18	ODPOJOVAC Q2	SCHALTZUSTAND	8D4 vyp.	22	27	39	0	75	DC	O		N	PV	R	Y	0.6	20.0	SCHALTGERÄT
2	3C3/3C4	R110	EA18	ODPOJOVAC Q2	SCHALTZUSTAND	8D4 zap.	22	27	39	0	75	DC	O		N	PV	R	Y	0.6	20.0	SCHALTGERÄT
3	4C1/4C2	R110	EA18	ODPOJOVAC Q7	SCHALTZUSTAND	7D2 vyp.	22	27	39	0	75	DC	O		N	PV	R	Y	0.6	20.0	SCHALTGERÄT
4	4C3/4C4	R110	EA18	ODPOJOVAC Q7	SCHALTZUSTAND	7D2 zap.	22	27	39	0	75	DC	O		N	PV	R	Y	0.6	20.0	SCHALTGERÄT
5	4D1/4D2															PV					
6	4D3/4D4															PV					
7	2D1/2D2	R110	EA18		KVITOVANIE	KON ZAC	22	27	0	39	75	SC	O	N	N	PV	R	N	0.6		SCHALTGERÄT
9	3E1/3E2	R110	EA18	ODPOJOVAC Q9	SCHALTZUSTAND	6D3 vyp.	22	27	39	0	75	DC	O		N	PV	R	Y	0.6	20.0	SCHALTGERÄT
10	3E3/3E4	R110	EA18	ODPOJOVAC Q9	SCHALTZUSTAND	6D3 zap.	22	27	39	0	75	DC	O		N	PV	R	Y	0.6	20.0	SCHALTGERÄT
11	4E1/4E2	R110	EA18	ODPOJOVAC Q1	SCHALTZUSTAND	5D1 vyp.	22	27	39	0	75	DC	O		N	PV	R	Y	0.6	20.0	SCHALTGERÄT
12	4E3/4E4	R110	EA18	ODPOJOVAC Q1	SCHALTZUSTAND	5D1 zap.	22	27	39	0	75	DC	O		N	PV	R	Y	0.6	20.0	SCHALTGERÄT
13	4F1/4F2	R110	EA18	ODPOJOVAC ZEMNIACI Q8	SCHALTZUSTAND	8FA vyp.	22	27	39	0	75	DC	O		N	PV	R	Y	0.6	20.0	SCHALTGERÄT
14	4F3/4F4	R110	EA18	ODPOJOVAC ZEMNIACI Q8	SCHALTZUSTAND	8FA zap.	22	27	39	0	75	DC	O		N	PV	R	Y	0.6	20.0	SCHALTGERÄT
15	2F1/2F2	R110	EA18		DEBLOKACIA BLOKOVANIA	KON ZAC	22	27	0	39	75	SC	R/C	N	N	PV	R/C	Y			SCHALTGERÄT

Proprietary data, company confidential. All rights reserved
Confia a tire da secret dèntreprise. Tous droits r,serv.s.
Comunicado como segredo empresarial. Reservados todos os direitos.
Confiado como secreto industrial. Nos reservamos todos los derechos.

The reproduction, transmission or use of this document or its contents is not permitted without express written authority. Offenders will be liable for damages. All rights, including rights created by patent grant or registration of a utility model or design, are reserved

Documentation structur: Standard
Source file: KO050722.ODA

Rev.	Remarks	Date	Name	Norm	Date 22.07.2005	Drawn LANG	Appr.	Orig./Repl. 1/Repl. by

VSZ KOSICE

SIEMENS AG
ISAOOLS

Substation control system 6MB
Compact I/O unit:
Commands
Table

T = /BG 104
+
-S106
Page 104

Station: UW KOSICE
Device: EA18 EAG
Device type: 6MB5220-1

Output	Connect designation	Switch interlocking
1	3C1/3C2	
2	3C3/3C4	
3	4C1/4C2	
4	4C3/4C4	
5	4D1/4D2	
6	4D3/4D4	
7	2D1/2D2	
9	3E1/3E2	
10	3E3/3E4	
11	4E1/4E2	
12	4E3/4E4	
13	4F1/4F2	SCHALTVERRIEGELUNG Q8 bei UG1 L1
14	4F3/4F4	SCHALTVERRIEGELUNG Q8 bei UG1 L1
15	2F1/2F2	

Proprietary data, company confidential. All rights reserved.
Confie a titre de secret d'entreprise. Tous droits réservés.
Comunicado como segredo empresarial. Reservados todos os direitos.
Confiado como secreto industrial. Nos reservamos todos los derechos.

The reproduction, transmission or use of this document or its is not permitted without expres written authority. Offenders will be liable for damages. All rights, including rights created by patent grant or registration of a utility model or design, are reserved

Documentation structur: Standard
Source file: KO050722.ODA

			Date	22.07.2005	VSZ KOSICE	SIEMENS AG ISA TOOLS	Substation control system 6MB
			Drawn	LANG			Compact I/O unit:
			Appr.				Commands
R	marks	Date	Name	Norm	Orig./Repl. 1/Repl. by		Table

T = /BG 105
+
-S106
Page

Station: UW KOSICE
Device: EA18 EAG
Device type: 6MB5220-1

Analog channel no.	Connect designation	Section	Bay	Logical device	Lower limit	Display value	Dimension	Zero suppression f. display in %	Text for display	Bay blockage	Thres val. for switchover in %	Process analog value in I/O uni	With live-zero monitoring	Display in diagram
1	STROM L2	R110	EA18	MESSWERTE STROM	PRUD L2	400.00	A	1.0	PRUD L2	N	0.0	N	PV	Y
2	STROM L1	R110	EA18	MESSWERTE STROM	PRUD L1	400.00	A	1.0	PRUD L1	N	0.0	N	PV	N
3	STROM L3	R110	EA18	MESSWERTE STROM	PRUD L3	400.00	A	1.0	PRUD L3	N	0.0	N	PV	N
4	UL1-UL2	R110	EA18	MESSWERTE SPANNUNG	NAPATIE L1	63.50	KV	10.0	NAPATIE L1	N	0.0	N	PV	Y
5	UL1-UL3												PV	
6	UL2-UL3												PV	
7	W-LEISTUNG	R110	EA18		VYKON CINNY	76.20	MW	1.0	VYKON CINNY	N	0.0	N	PV	Y
8	B-LEISTUNG												PV	

Proprietary data, company confidential. All rights reserved
Confia a tire de secret d'entreprise. Tous droits reservs.
Comunicado como segredo empresarial. Reservados todos os direitos.
Confiado como secreto industrial. Nos reservamos todos los derechos.

The reproduction, transmission or use of this document or its contents is not permitted without express written authority. Offenders will be liable for damages. All rights, including rights created by patent grant or registration of a utility model or design, are reserved

Documentation structure: Standard
Source file: K0050722.ODA

Rev.	Remarks	Date	Name	Norm	Date 22.07.2005	Drawn LANG	Appr.	Orig./Repl. 1/Repl. by

VSZ KOSICE

SIEMENS AG
ISAIOOLS

Substation control system 6MB
Compact I/O unit:
Analog values
Table

T = /BG 106
+
-S106
Page 106

Station: UW KOSICE
Device: EA18 EAG
Device type: 6MB5220-1

Analog channel no.	Connect designation	Archive	Analog recording	Recording mode	No. of val. to be averaged	Scan interval in s	Analog value type	Max. value of analog value	Keep non-return pointer	Calculated demand value	Derive percentage value	Derive metered value	Static limit monitoring: Filtering time in s	Lower limit 1	Indication at lower limit 1	Lower limit 2	Indication at lower limit 2	Upper limit 1	Indication at higher limit 1	Upper limit 2	Indication at higher limit 2
1	STROM L2	Y	PERM	Analog value direct		900	CUR	480.00	PV	PV	PV	PV	0					479.90	PRUD L2 HH1		
2	STROM L1	Y	PERM	Analog value direct		900	CUR	480.00	PV	PV	PV	PV	0					479.90	PRUD L1 HH1		
3	STROM L3	Y	PERM	Analog value direct		900	CUR	480.00	PV	PV	PV	PV	0					479.90	PRUD L3 HH1		
4	UL1-UL2	Y	PERM	Analog value direct		900	PV	76.21	PV	PV	PV	PV	0	57.15	NAPATIE L1 DH1	44.45	NAPATIE L1 DH2	69.85	NAPATIE L1 HH1		
5	UL1-UL3											PV									
6	UL2-UL3											PV									
7	W-LEISTUNG	Y	PERM	Analog value direct		900	AP	91.45	PV	PV	PV	PV									
8	B-LEISTUNG											PV									

Proprietary data, company confidential. All rights reserved.
Confie a titre de secret d'entreprise. Tous droits reservs.
Comunicado como segredo empresarial. Reservados todos os direitos.
Confiado como secreto industrial. Nos reservamos todos los derechos.
The reproduction, transmission or use of this document or its is not permitted without expres written authority.
Offenders will be liable for damages. All rights, including rights created by patent grant or registration of a utility model or design, are reserved

Documentation structur: Standard
Source file: KO050722.ODA

			Date	22.07.2005	VSZ KOSICE	SIEMENS AG ISA TOOLS	Substation control system 6MB	T = /BG 107
			Drawn	LANG			Compact I/O unit:	+
			Appr.				Analog values	-S106 Page
R	marks	Date	Name	Norm	Orig./Repl. 1/Repl. by		Table	

Station: UW KOSICE
Device: EA18 EAG
Device type: 6MB5220-1

Analog channel no.	Connect designation	Teletrans. FP raw val. Master station	Name of telegram	Name of info element
1	STROM L2	IEC 870-5-101	Meßwerttelegramm	860
2	STROM L1	IEC 870-5-101	Meßwerttelegramm	861
3	STROM L3	IEC 870-5-101	Meßwerttelegramm	862
4	UL1-UL2	IEC 870-5-101	Meßwerttelegramm	863
5	UL1-UL3			
6	UL2-UL3			
7	W-LEISTUNG	IEC 870-5-101	Meßwerttelegramm	864
8	B-LEISTUNG			

Proprietary data, company confidential. All rights reserved.
Confia a titre de secret d'entreprise. Tous droits réservés.
Comunicado como segredo empresarial. Reservados todos os direitos.
Confiado como secreto industrial. Nos reservamos todos los derechos.

The reproduction, transmission or use of this document or its is not permitted without express written authority.
Offenders will be liable for damages. All rights, including rights created by patent grant or registration of a utility model or design, are reserved

Documentation structur: Standard
Source file: KO050722.ODA

Rev.	Remarks	Date	Name	Date	22.07.2005	VSZ KOSICE	SIEMENS AG ISA TOOLS	Substation control system 6MB
				Drawn	LANG			Compact I/O unit:
				Appr.				Analog values
				Norm		Orig./Repl. 1/Repl. by		Table

T = /BG 108
+
-S106

Proprietary data, company confidential. All rights reserved.
Confia a ltrie de secret dentreprise. Tous droits reservs.
Comunicado como segredo empresarial. Reservados todos os direitos.
Contado como secreto industrial. Nos reservamos todos los derechos.

The reproduction, transmission or use of this document or its contents is not permitted without express written authority. Offenders will be liable for damages. All rights, including rights created by patent grant or registration of a utility model or design, are reserved.

Station: UW KOSICE
Device: EA19 EAG
Device type: 6MB5220-1
Packet numbe 8
Version no.: 1

Connection:
Device: LZG
Subrack: LZG-BGT
Module: AST 2
UART: 2
MUX: 3

General definitions:

Rated auxiliary voltage:	60 V, 110 V, 125 V DC
LZG monitoring:	Indication
Ext. met. value tr. comm.:	No
LIVE contact:	No
Buffer type:	I/O unit normal
Timeout monitoring:	Yes

Scan cycle for ind. input:

Scan cycle for fault ind.:	10
Scan number 02:	10
Scan cycle for pos. ind.:	100
Scan number 03:	3
Scan cycle for op. ind.:	1000
Scan number 04:	1

Specifications for chatter dis

Analog interval in s:
Blockage time in s:
Number of test cycle
Number of block. cyc

Input	Connect designation	Section	Bay	Logical device	Lower limit	Value text	Column section	Column bay	Column logical device	Column information	Column value text	With command	Indication type	Entry in event list	Entry in alarm list	Acknowledge	Display in indication area	Indication class	Entry in SML	Display in diagram	Display of intermed. pos.	Acknowledge	Display under voltage level	Indication class	Archive	Operational indications	Protection indications
1	8D4	R110	EA19	ODPOJOVAC Q2	SCHALTZUSTAND	vyp.	22	27	39	0	75	LZM	DI	O					N	Y	N	O	Y	2	R	Y	N
2	7D1	R110	EA19	ODPOJOVAC Q2	SCHALTZUSTAND	zap.	22	27	39	0	75	LZM	DI	O					N	Y	N	O	Y	2	R	Y	N
3	7D2	R110	EA19	ODPOJOVAC Q7	SCHALTZUSTAND	vyp.	22	27	39	0	75	LZM	DI	O					N	Y	N	O	Y	2	R	Y	N
4	7D3	R110	EA19	ODPOJOVAC Q7	SCHALTZUSTAND	zap.	22	27	39	0	75	LZM	DI	O					N	Y	N	O	Y	2	R	Y	N
5	7D4	R110	EA19	VYPINAC Q01	SCHALTZUSTAND	vyp.	22	27	39	0	75	LZM	DI	O					N	Y	N	O	Y	2	R	Y	N
6	6D1	R110	EA19	VYPINAC Q01	SCHALTZUSTAND	zap.	22	27	39	0	75	LZM	DI	O					N	Y	N	O	Y	2	R	Y	N
7	6D3	R110	EA19	ODPOJOVAC Q9	SCHALTZUSTAND	vyp.	22	27	39	0	75	LZM	DI	O					N	Y	N	O	Y	2	R	Y	N
8	6D4	R110	EA19	ODPOJOVAC Q9	SCHALTZUSTAND	zap.	22	27	39	0	75	LZM	DI	O					N	Y	N	O	Y	2	R	Y	N
9	5D1	R110	EA19	ODPOJOVAC Q1	SCHALTZUSTAND	vyp.	22	27	39	0	75	LZM	DI	O					N	Y	N	O	Y	2	R	Y	N
10	5D2	R110	EA19	ODPOJOVAC Q1	SCHALTZUSTAND	zap.	22	27	39	0	75	LZM	DI	O					N	Y	N	O	Y	2	R	Y	N
11	5D3	R110	EA19		8TK PORUCHA	KON ZAC	22	27	0	39	75	PV	SI	R/C	Y	R/C	Y	1	N	N					R/C	Y	N
13	8FA	R110	EA19	ODPOJOVAC ZEMNIACI Q8	SCHALTZUSTAND	vyp.	22	27	39	0	75	LZM	DI	O					N	Y	N	O	Y	2	R	Y	N
14	7F1	R110	EA19	ODPOJOVAC ZEMNIACI Q8	SCHALTZUSTAND	zap.	22	27	39	0	75	LZM	DI	O					N	Y	N	O	Y	2	R	Y	N
15	7F2	R110	EA19		VYPN.VYPINAC.BEZ POVELU	KON ZAC	22	27	0	39	75	PV	TR	O	Y	O	Y	1	N	N					R	Y	N
16	7F3	R110	EA19		PREVADZKA S1	KON ZAC	22	27	0	39	75	PV	SI	R/C	Y	R/C	Y	1	N	Y		N	N		R/C	Y	N
17	7F4	R110	EA19		S5 POLOHA VYPN./MIESTNE	KON ZAC	22	27	0	39	75	PV	SI	R/C	Y	R/C	Y	1	N	Y		N	N		R/C	Y	N
18	6F1	R110	EA19		CHYBA OBSLUHY	KON ZAC	22	27	0	39	75	PV	SI	R/C	N				N	N					R/C	Y	N
19	6F3	R110	EA19		PREKROCENIE CASU BEHU	KON ZAC	22	27	0	39	75	PV	SI	R/C	N				N	N					R/C	Y	N
20	6F4	R110	EA19		PORUCHA VYPINACA	KON ZAC	22	27	0	39	75	PV	SI	R/C	Y	R/C	Y	1	N	N					R/C	N	Y
21	5F1	R110	EA19		STRATA js./st. NAPATI	KON ZAC	22	27	0	39	75	PV	SI	R/C	Y	R/C	Y	1	N	N					R/C	N	Y
22	5F2	R110	EA19		PORUCHA VYPINACA Q01	KON ZAC	22	27	0	39	75	PV	SI	R/C	Y	R/C	Y	1	N	N					R/C	N	Y
23	5F3																										

Documentation structur: Standard
Source file: KO050722.ODA

Date	22.07.2005	VSZ KOSICE	SIEMENS AG ISALOOLS
Drawn	LANG		
Appr.			
Remarks	Date	Name Norm	Orig./Repl. 1/Repl. by

Substation control system 6MB
Compact I/O unit:
Indications
Table

T = /BG 109
+
-S106
Page

Proprietary data, company confidential. All rights reserved.
Confie a titre de secret d'entreprise. Tous droits r,serv,s.
Comunicado como segredo empresarial. Reservados todos os direitos.
Confiado como secreto industrial. Nos reservamos todos los derechos.

The reproduction, transmission or use of this document or its is not permitted without expres written authority.
Offenders will be liable for damages. All rights, including rights created by patent grant or registration of a utility model or design, are reserved

Documentation structur: Standard
Source file: KO050722.ODA

Station: UW KOSICE
Device: EA19 EAG
Device type: 6MB5220-1
Packet numbe 8
Version no.: 1

Connection:
Device: LZG
Subrack: LZG-BGT
Module: AST 2
UART: 2
MUX: 3

General definitions:
Rated auxiliary voltage: 60 V, 110 V, 125 V DC
LZG monitoring: Indication
Ext. met. value tr. comm.: No
LIVE contact: No
Buffer type: I/O unit normal
Timeout monitoring: Yes

Scan cycle for ind. input:
Scan cycle for fault ind.: 10
Scan number 02: 10
Scan cycle for pos. ind.: 100
Scan number 03: 3
Scan cycle for op. ind.: 1000
Scan number 04: 1

Specifications for chatter dis
Analog interval in s:
Blockage time in s:
Number of test cycle
Number of block. cyc

Input	Connect designation	Filt. of raised & cleared	Filtering of intermed. pos.	Bay blockage	Monitored as feedback	Checkback monit. time in s	Command derivation	Indication derivation	Remote transmission FP: Master station	Name of telegram	Name of info element
1	8D4		N	N	Y	20.0			IEC 870-5-101	Meldungstelegramm DM	472
2	7D1		N	N	Y	20.0			IEC 870-5-101	Meldungstelegramm DM	472
3	7D2		N	N	Y	20.0			IEC 870-5-101	Meldungstelegramm DM	473
4	7D3		N	N	Y	20.0			IEC 870-5-101	Meldungstelegramm DM	473
5	7D4		N	N	Y	1.0			IEC 870-5-101	Meldungstelegramm DM	476
6	6D1		N	N	Y	1.0			IEC 870-5-101	Meldungstelegramm DM	476
7	6D3		N	N	Y	20.0			IEC 870-5-101	Meldungstelegramm DM	475
8	6D4		N	N	Y	20.0			IEC 870-5-101	Meldungstelegramm DM	475
9	5D1		N	N	Y	20.0			IEC 870-5-101	Meldungstelegramm DM	471
10	5D2		N	N	Y	20.0			IEC 870-5-101	Meldungstelegramm DM	471
11	5D3	N		N	N		Alarm 1 (Hupenbefehl)	KVIT 8TK			
13	8FA		N	N	Y	20.0			IEC 870-5-101	Meldungstelegramm DM	474
14	7F1		N	N	Y	20.0			IEC 870-5-101	Meldungstelegramm DM	474
15	7F2			N	N		Alarm 1 (Hupenbefehl)	KVIT 8TK			
16	7F3	N		N	N		Alarm 1 (Hupenbefehl)				
17	7F4	N		N	N		Alarm 1 (Hupenbefehl)				
18	6F1	N		N	N		Alarm 1 (Hupenbefehl)	KVIT 8TK			
19	6F3	N		N	N		Alarm 1 (Hupenbefehl)	KVIT 8TK			
20	6F4	N		N	N		Alarm 1 (Hupenbefehl)				
21	5F1	N		N	N		Alarm 1 (Hupenbefehl)				
22	5F2	N		N	N		Alarm 1 (Hupenbefehl)				
23	5F3										

Rev.	Remarks	Date	Name	Date	22.07.2005	VSZ KOSICE	SIEMENS AG ISAOOLS	Substation control system 6MB
				Drawn	LANG			Compact I/O unit:
				Appr.				Indications
				Norm		Orig./Repl. 1/Repl. by		Table

T = /BG 110
+
-S106
Page 110

Station: UW KOSICE
Device: EA19 EAG
Device type: 6MB5220-1

Output	Connect designation	Section	Bay	Logical device	Lower limit	Value text		Column section	Column bay	Column logical device	Column information	Column value text	Type of command	Entry in event list	Entry in alarm list	Entry in SML	Display in diag. as select. field	Archive	Operational indications	SW termination time in s	Checkback monit. time in s	Interlocking type:
1	3C1/3C2	R110	EA19	ODPOJOVAC Q2	SCHALTZUSTAND	8D4	vyp.	22	27	39	0	75	DC	O		N	PV	R	Y	0.6	20.0	SCHALTGERÄT
2	3C3/3C4	R110	EA19	ODPOJOVAC Q2	SCHALTZUSTAND	8D4	zap.	22	27	39	0	75	DC	O		N	PV	R	Y	0.6	20.0	SCHALTGERÄT
3	4C1/4C2	R110	EA19	ODPOJOVAC Q7	SCHALTZUSTAND	7D2	vyp.	22	27	39	0	75	DC	O		N	PV	R	Y	0.6	20.0	SCHALTGERÄT
4	4C3/4C4	R110	EA19	ODPOJOVAC Q7	SCHALTZUSTAND	7D2	zap.	22	27	39	0	75	DC	O		N	PV	R	Y	0.6	20.0	SCHALTGERÄT
5	4D1/4D2	R110	EA19	VYPINAC Q01	SCHALTZUSTAND	7D4	vyp.	22	27	39	0	75	DC	O		N	PV	R	Y	0.6	1.0	SCHALTGERÄT
6	4D3/4D4	R110	EA19	VYPINAC Q01	SCHALTZUSTAND	7D4	zap.	22	27	39	0	75	DC	O		N	PV	R	Y	0.6	1.0	SCHALTGERÄT
7	2D1/2D2	R110	EA19		KVITOVANIE	KON	ZAC	22	27	0	39	75	SC	O	N	N	PV	R	N	0.6		SCHALTGERÄT
9	3E1/3E2	R110	EA19	ODPOJOVAC Q9	SCHALTZUSTAND	6D3	vyp.	22	27	39	0	75	DC	O		N	PV	R	Y	0.6	20.0	SCHALTGERÄT
10	3E3/3E4	R110	EA19	ODPOJOVAC Q9	SCHALTZUSTAND	6D3	zap.	22	27	39	0	75	DC	O		N	PV	R	Y	0.6	20.0	SCHALTGERÄT
11	4E1/4E2	R110	EA19	ODPOJOVAC Q1	SCHALTZUSTAND	5D1	vyp.	22	27	39	0	75	DC	O		N	PV	R	Y	0.6	20.0	SCHALTGERÄT
12	4E3/4E4	R110	EA19	ODPOJOVAC Q1	SCHALTZUSTAND	5D1	zap.	22	27	39	0	75	DC	O		N	PV	R	Y	0.6	20.0	SCHALTGERÄT
13	4F1/4F2	R110	EA19	ODPOJOVAC ZEMNIACI Q8	SCHALTZUSTAND	8FA	vyp.	22	27	39	0	75	DC	O		N	PV	R	Y	0.6	20.0	SCHALTGERÄT
14	4F3/4F4	R110	EA19	ODPOJOVAC ZEMNIACI Q8	SCHALTZUSTAND	8FA	zap.	22	27	39	0	75	DC	O		N	PV	R	Y	0.6	20.0	SCHALTGERÄT
15	2F1/2F2	R110	EA19		DEBLOKACIA BLOKOVANIA	KON	ZAC	22	27	0	39	75	SC	R/C	N	N	PV	R/C	Y			SCHALTGERÄT

Proprietary data, company confidential. All rights reserved
Confia a tire de secret d'entreprise. Tous droits réservés.
Comunicado como segredo empresarial. Reservados todos os direitos
Confiado como secreto industrial. Nos reservamos todos los derechos

The reproduction, transmission or use of this document or its contents is not permitted without express written authority. Offenders will be liable for damages. All rights, including rights created by patent grant or registration of a utility model or design, are reserved

Documentation structure: Standard
Source file: KO050722.ODA

Date	22.07.2005	VSZ KOSICE	SIEMENS AG ISAIOOLS
Drawn	LANG		
Appr.			
Norm		Orig./Repl. 1/Repl. by	

Substation control system 6MB
Compact I/O unit:
Commands
Table

T = /BG 111
+
-S106
Page

Remarks | Date | Name

Station: UW KOSICE
Device: EA19 EAG
Device type: 6MB5220-1

Output	Connect designation	Switch interlocking
1	3C1/3C2	
2	3C3/3C4	
3	4C1/4C2	
4	4C3/4C4	
5	4D1/4D2	
6	4D3/4D4	
7	2D1/2D2	
9	3E1/3E2	
10	3E3/3E4	
11	4E1/4E2	
12	4E3/4E4	
13	4F1/4F2	SCHALTVERRIEGELUNG Q8 bei UG1 L1
14	4F3/4F4	SCHALTVERRIEGELUNG Q8 bei UG1 L1
15	2F1/2F2	

Proprietary data, company confidential. All rights reserved.
Confie a titre de secret d'entreprise. Tous droits reservs.
Comunicado como segredo empresarial. Reservados todos os direitos.
Confiado como secreto industrial. Nos reservamos todos los derechos.

The reproduction, transmission or use of theis document or its is not permitted without expres written authority.
Offenders will be liable for damages. All rights, including rights created by patent grant or registration of a utility model or design, are reserved

Documentation structur: Standard
Source file: KO050722.ODA

Rev.	Remarks	Date	Name	Date	22.07.2005	VSZ KOSICE	SIEMENS AG ISA TOOLS	Substation control system 6MB
				Drawn	LANG			Compact I/O unit:
				Appr.				Commands
				Norm		Orig./Repl. 1/Repl. by		Table

T = /BG 112
+
-S106
Page 112

Station: UW KOSICE
Device: EA19 EAG
Device type: 6MB5220-1

Analog channel no.	Connect designation	Section	Bay	Logical device	Lower limit	Display value	Dimension	Zero suppression f. display in %	Text for display	Bay blockage	Thres val. for switchover in %	Process analog value in I/O uni	With live-zero monitoring	Display in diagram
1	STROM L2	R110	EA19	MESSWERTE STROM	PRUD L2	400.00	A	1.0	PRUD L2	N	0.0	N	PV	Y
2	STROM L1	R110	EA19	MESSWERTE STROM	PRUD L1	400.00	A	1.0	PRUD L1	N	0.0	N	PV	N
3	STROM L3	R110	EA19	MESSWERTE STROM	PRUD L3	400.00	A	1.0	PRUD L3	N	0.0	N	PV	N
4	UL1-UL2	R110	EA19	MESSWERTE SPANNUNG	NAPATIE L1	63.50	KV	10.0	NAPATIE L1	N	0.0	N	PV	Y
5	UL1-UL3												PV	
6	UL2-UL3												PV	
7	W-LEISTUNG	R110	EA19		VYKON CINNY	76.20	MW	1.0	VYKON CINNY	N	0.0	N	PV	Y
8	B-LEISTUNG												PV	

Proprietary data, company confidential. All rights reserved.
Confie a titre de secret d'entreprise. Tous droits reservs.
Comunicado como segredo empresarial. Reservados todos os direitos.
Confiado como secreto industrial. Nos reservamos todos los derechos.

The reproduction, transmission or use of this document or its is not permitted without express written authority. Offenders will be liable for damages. All rights, including rights created by patent grant or registration of a utility model or design, are reserved

Documentation structur: Standard
Source file: KO050722.ODA

			Date	22.07.2005	VSZ KOSICE	SIEMENS AG ISA TOOLS	Substation control system 6MB
			Drawn	LANG			Compact I/O unit:
			Appr.				Analog values
R	arks	Date	Name	Norm	Orig./Repl. 1/Repl. by		Table

T = /BG 113
+
-S106
Page

Station: UW KOSICE
Device: EA19 EAG
Device type: 6MB5220-1

Analog channel no.	Connect designation	Archive	Analog recording	Recording mode	No. of val. to be averaged	Scan interval in s	Analog value type	Max. value of analog value	Keep non-return pointer	Calculated demand value	Derive percentage value	Derive metered value	Static limit monitoring: Filtering time in s	Lower limit 1	Indication at lower limit 1	Lower limit 2	Indication at lower limit 2	Upper limit 1	Indication at higher limit 1	Upper limit 2	Indication at higher limit 2
1	STROM L2	Y	PERM	Analog value direct		900	CUR	480.00	PV	PV	PV	PV	0					479.90	PRUD L2 HH1		
2	STROM L1	Y	PERM	Analog value direct		900	CUR	480.00	PV	PV	PV	PV	0					479.90	PRUD L1 HH1		
3	STROM L3	Y	PERM	Analog value direct		900	CUR	480.00	PV	PV	PV	PV	0					479.90	PRUD L3 HH1		
4	UL1-UL2	Y	PERM	Analog value direct		900	PV	76.21	PV	PV	PV	PV	0	57.15	NAPATIE L1 DH1	44.45	NAPATIE L1 DH2	69.85	NAPATIE L1 HH1		
5	UL1-UL3											PV									
6	UL2-UL3											PV									
7	W-LEISTUNG	Y	PERM	Analog value direct		900	AP	91.45	PV	PV	PV	PV									
8	B-LEISTUNG											PV									

Proprietary data, company confidential. All rights reserved.
Confie a titre de secret d'entreprise. Tous droits r,serv,s.
Comunicado como segredo empresarial. Reservados todos os direitos.
Confiado como secreto industrial. Nos reservamos todos los derechos.
The reproduction, transmission or use of theis document or its is not permitted without expres written authority. Offenders will be liable for damages. All rights, including rights created by patent grant or registration of a utility model or design, are reserved

Documentation structur: Standard
Source file: KO050722.ODA

Rev.	Remarks	Date	Name	Date	22.07.2005	VSZ KOSICE	SIEMENS AG ISA TOOLS	Substation control system 6MB	T = /BG 114
				Drawn	LANG			Compact I/O unit:	+
				Appr.				Analog values	-S106 Page 114
				Norm		Orig./Repl. 1/Repl. by		Table	

Station: UW KOSICE
Device: EA19 EAG
Device type: 6MB5220-1

Analog channel no.	Connect designation	Master station (Teletrans. FP raw val.)	Name of telegram	Name of info element
1	STROM L2	IEC 870-5-101	Meßwerttelegramm	870
2	STROM L1	IEC 870-5-101	Meßwerttelegramm	871
3	STROM L3	IEC 870-5-101	Meßwerttelegramm	872
4	UL1-UL2	IEC 870-5-101	Meßwerttelegramm	873
5	UL1-UL3			
6	UL2-UL3			
7	W-LEISTUNG	IEC 870-5-101	Meßwerttelegramm	874
8	B-LEISTUNG			

Proprietary data, company confidential. All rights reserved.
Confie a titre de secret d'entreprise. Tous droits réservés.
Comunicado como segredo empresarial. Reservados todos os direitos.
Confiado como secreto industrial. Nos reservamos todos los derechos.
The reproduction, transmission or use of this document or its is not permitted without express written authority.
Offenders will be liable for damages. All rights, including rights created by patent grant or registration of a utility model or design, are reserved.

Documentation structur: Standard
Source file: KO050722.ODA

			Date	22.07.2005	VSZ KOSICE	SIEMENS AG ISA TOOLS	Substation control system 6MB
			Drawn	LANG			Compact I/O unit:
			Appr.				Analog values
R	Remarks	Date	Name	Norm	Orig./Repl. 1/Repl. by		Table

T = /BG 115
+
-S106
Page

Proprietary data, company confidential. All rights reserved
Confiança tira da secret dentreprise. Tous droits reservs.
Comunicado como segredo empresarial. Reservados todos os direitos.
Confiado como secreto industrial. Nos reservamos todos los derechos.

The reproduction, transmission or use of this document or its is not permitted without express written authority.
Offenders will be liable for damages. All rights, including rights created by patent grant or registration of a utility model or design, are reserved

Station: UW KOSICE
Device: EA20 EAG
Device type: 6MB5220-1
Packet numbe 8
Version no.: 1

Connection:
Device: LZG
Subrack: LZG-BGT
Module: AST 2
UART: 2
MUX: 4

General definitions:

Rated auxiliary voltage:	60 V, 110 V, 125 V DC
LZG monitoring:	Indication
Ext. met. value tr. comm.:	No
LIVE contact:	No
Buffer type:	I/O unit normal
Timeout monitoring:	Yes

Scan cycle for ind. input:

Scan cycle for fault ind.:	10
Scan number 02:	10
Scan cycle for pos. ind.:	100
Scan number 03:	3
Scan cycle for op. ind.:	1000
Scan number 04:	1

Specifications for chatter dis

Analog interval in s:
Blockage time in s:
Number of test cycle
Number of block. cyc

Input	Connect designation	Section	Bay	Logical device	Lower limit	Value text	Column section	Column bay	Column logical device	Column information	Column value text	With command	Indication type	Entry in event list	Entry in alarm list	Acknowledge	Display in indication area	Indication class	Entry in SML	Display in diagram	Display of intermed. pos.	Acknowledge	Display under voltage level	Indication class	Archive	Operational indications	Protection indications
1	8D4	R110	EA20	ODPOJOVAC Q2	SCHALTZUSTAND	vyp.	22	27	39	0	75	LZM	DI	O					N	Y	N	O	Y	2	R	Y	N
2	7D1	R110	EA20	ODPOJOVAC Q2	SCHALTZUSTAND	zap.	22	27	39	0	75	LZM	DI	O					N	Y	N	O	Y	2	R	Y	N
3	7D2	R110	EA20	ODPOJOVAC Q7	SCHALTZUSTAND	vyp.	22	27	39	0	75	LZM	DI	O					N	Y	N	O	Y	2	R	Y	N
4	7D3	R110	EA20	ODPOJOVAC Q7	SCHALTZUSTAND	zap.	22	27	39	0	75	LZM	DI	O					N	Y	N	O	Y	2	R	Y	N
5	7D4																										
6	6D1																										
7	6D3	R110	EA20	ODPOJOVAC Q9	SCHALTZUSTAND	vyp.	22	27	39	0	75	LZM	DI	O					N	Y	N	O	Y	2	R	Y	N
8	6D4	R110	EA20	ODPOJOVAC Q9	SCHALTZUSTAND	zap.	22	27	39	0	75	LZM	DI	O					N	Y	N	O	Y	2	R	Y	N
9	5D1	R110	EA20	ODPOJOVAC Q1	SCHALTZUSTAND	vyp.	22	27	39	0	75	LZM	DI	O					N	Y	N	O	Y	2	R	Y	N
10	5D2	R110	EA20	ODPOJOVAC Q1	SCHALTZUSTAND	zap.	22	27	39	0	75	LZM	DI	O					N	Y	N	O	Y	2	R	Y	N
11	5D3	R110	EA20		8TK PORUCHA	KON ZAC	22	27	0	39	75	PV	SI	R/C	Y	R/C	Y	1	N	N					R/C	Y	N
13	8FA	R110	EA20	ODPOJOVAC ZEMNIACI Q8	SCHALTZUSTAND	vyp.	22	27	39	0	75	LZM	DI	O					N	Y	N	O	Y	2	R	Y	N
14	7F1	R110	EA20	ODPOJOVAC ZEMNIACI Q8	SCHALTZUSTAND	zap.	22	27	39	0	75	LZM	DI	O					N	Y	N	O	Y	2	R	Y	N
15	7F2	R110	EA20		VYPN.VYPINAC.BEZ POVELU	KON ZAC	22	27	0	39	75	PV	TR	O	Y	O	Y	1	N	N					R	Y	N
16	7F3	R110	EA20		PREVADZKA S1	KON ZAC	22	27	0	39	75	PV	SI	R/C	Y	R/C	Y	1	N	Y		N	N		R/C	Y	N
17	7F4	R110	EA20		S5 POLOHA VYPN./MIESTNE	KON ZAC	22	27	0	39	75	PV	SI	R/C	Y	R/C	Y	1	N	Y		N	N		R/C	Y	N
18	6F1	R110	EA20		CHYBA OBSLUHY	KON ZAC	22	27	0	39	75	PV	SI	R/C	N				N	N					R/C	Y	N
19	6F3	R110	EA20		PREKROCENIE CASU BEHU	KON ZAC	22	27	0	39	75	PV	SI	R/C	N				N	N					R/C	Y	N
20	6F4	R110	EA20		PORUCHA VYPINACA	KON ZAC	22	27	0	39	75	PV	SI	R/C	Y	R/C	Y	1	N	N					R/C	N	Y
21	5F1	R110	EA20		STRATA js./st. NAPATI	KON ZAC	22	27	0	39	75	PV	SI	R/C	Y	R/C	Y	1	N	N					R/C	N	Y
22	5F2																										
23	5F3																										

Documentation structur: Standard
Source file: KO050722.ODA

Rev.	Remarks	Date	Name Norm	Date 22.07.2005	Drawn LANG	Appr.	VSZ KOSICE	SIEMENS AG ISATOOLS	Substation control system 6MB Compact I/O unit: Indications Table	T = /BG 116 + -S106 Page 116
							Orig./Repl. 1/Repl. by			

Proprietary data, company confidential. All rights reserved.
Confiaa a tina de secret d'entreprise. Tous droits r,serv,s.
Comunicado como segredo empresarial. Reservados todos os direitos.
Contado como secreto industrial. Nos reservamos todos los derechos.

The reproduction, transmission or use of this document or its contents is not permitted without expres written authority. Offenders will be liable for damages. All rights, including rights created by patent grant or registration of a utility model or design, are reserved.

Station: UW KOSICE
Device: EA20 EAG
Device type: 6MB5220-1
Packet numbe 8
Version no.: 1

Connection:
Device: LZG
Subrack: LZG-BGT
Module: AST 2
UART: 2
MUX: 4

General definitions:

Rated auxiliary voltage: 60 V, 110 V, 125 V DC
LZG monitoring: Indication
Ext. met. value tr. comm.: No
LIVE contact: No
Buffer type: I/O unit normal
Timeout monitoring: Yes

Scan cycle for ind. input:

Scan cycle for fault ind.: 10
Scan number 02: 10
Scan cycle for pos. ind.: 100
Scan number 03: 3
Scan cycle for op. ind.: 1000
Scan number 04: 1

Specifications for chatter dis

Analog interval in s:
Blockage time in s:
Number of test cycle
Number of block. cyc

Input	Connect designation	Filt. of raised & cleared	Filtering of intermed. pos.	Bay blockage	Monitored as feedback	Checkback monit. time in s	Command derivation	Indication derivation	Remote transmission FP: Master station	Name of telegram	Name of info element
1	8D4		N	N	Y	20.0			IEC 870-5-101	Meldungstelegramm DM	482
2	7D1		N	N	Y	20.0			IEC 870-5-101	Meldungstelegramm DM	482
3	7D2		N	N	Y	20.0			IEC 870-5-101	Meldungstelegramm DM	483
4	7D3		N	N	Y	20.0			IEC 870-5-101	Meldungstelegramm DM	483
5	7D4										
6	6D1										
7	6D3		N	N	Y	20.0			IEC 870-5-101	Meldungstelegramm DM	485
8	6D4		N	N	Y	20.0			IEC 870-5-101	Meldungstelegramm DM	485
9	5D1		N	N	Y	20.0			IEC 870-5-101	Meldungstelegramm DM	481
10	5D2		N	N	Y	20.0			IEC 870-5-101	Meldungstelegramm DM	481
11	5D3	N		N	N		Alarm 1 (Hupenbefehl)	KVIT 8TK			
13	8FA		N	N	Y	20.0			IEC 870-5-101	Meldungstelegramm DM	484
14	7F1		N	N	Y	20.0			IEC 870-5-101	Meldungstelegramm DM	484
15	7F2			N	N		Alarm 1 (Hupenbefehl)	KVIT 8TK			
16	7F3	N		N	N		Alarm 1 (Hupenbefehl)				
17	7F4	N		N	N		Alarm 1 (Hupenbefehl)				
18	6F1	N		N	N		Alarm 1 (Hupenbefehl)	KVIT 8TK			
19	6F3	N		N	N		Alarm 1 (Hupenbefehl)	KVIT 8TK			
20	6F4	N		N	N		Alarm 1 (Hupenbefehl)				
21	5F1	N		N	N		Alarm 1 (Hupenbefehl)				
22	5F2										
23	5F3										

Documentation structure: Standard
Source file: KO050722.ODA

Date 22.07.2005
Drawn LANG
Appr.

VSZ KOSICE

SIEMENS AG
ISAOOLS

Substation control system 6MB
Compact I/O unit:
Indications
Table

T = /BG 117
+
-S106
Page

Remarks | Date | Name Norm | Orig./Repl. 1/Repl. by

Station: UW KOSICE
Device: EA20 EAG
Device type: 6MB5220-1

Output	Connect designation	Section	Bay	Logical device	Lower limit	Value text	Column section	Column bay	Column logical device	Column information	Column value text	Type of command	Entry in event list	Entry in alarm list	Entry in SML	Display in diag. as select. field	Archive	Operational indications	SW termination time in s	Checkback monit. time in s	Interlocking type:
1	3C1/3C2	R110	EA20	ODPOJOVAC Q2	SCHALTZUSTAND	8D4 vyp.	22	27	39	0	75	DC	O		N	PV	R	Y	0.6	20.0	SCHALTGERÄT
2	3C3/3C4	R110	EA20	ODPOJOVAC Q2	SCHALTZUSTAND	8D4 zap.	22	27	39	0	75	DC	O		N	PV	R	Y	0.6	20.0	SCHALTGERÄT
3	4C1/4C2	R110	EA20	ODPOJOVAC Q7	SCHALTZUSTAND	7D2 vyp.	22	27	39	0	75	DC	O		N	PV	R	Y	0.6	20.0	SCHALTGERÄT
4	4C3/4C4	R110	EA20	ODPOJOVAC Q7	SCHALTZUSTAND	7D2 zap.	22	27	39	0	75	DC	O		N	PV	R	Y	0.6	20.0	SCHALTGERÄT
5	4D1/4D2															PV					
6	4D3/4D4															PV					
7	2D1/2D2	R110	EA20		KVITOVANIE	KON ZAC	22	27	0	39	75	SC	O	N	N	PV	R	N	0.6		SCHALTGERÄT
9	3E1/3E2	R110	EA20	ODPOJOVAC Q9	SCHALTZUSTAND	6D3 vyp.	22	27	39	0	75	DC	O		N	PV	R	Y	0.6	20.0	SCHALTGERÄT
10	3E3/3E4	R110	EA20	ODPOJOVAC Q9	SCHALTZUSTAND	6D3 zap.	22	27	39	0	75	DC	O		N	PV	R	Y	0.6	20.0	SCHALTGERÄT
11	4E1/4E2	R110	EA20	ODPOJOVAC Q1	SCHALTZUSTAND	5D1 vyp.	22	27	39	0	75	DC	O		N	PV	R	Y	0.6	20.0	SCHALTGERÄT
12	4E3/4E4	R110	EA20	ODPOJOVAC Q1	SCHALTZUSTAND	5D1 zap.	22	27	39	0	75	DC	O		N	PV	R	Y	0.6	20.0	SCHALTGERÄT
13	4F1/4F2	R110	EA20	ODPOJOVAC ZEMNIACI Q8	SCHALTZUSTAND	8FA vyp.	22	27	39	0	75	DC	O		N	PV	R	Y	0.6	20.0	SCHALTGERÄT
14	4F3/4F4	R110	EA20	ODPOJOVAC ZEMNIACI Q8	SCHALTZUSTAND	8FA zap.	22	27	39	0	75	DC	O		N	PV	R	Y	0.6	20.0	SCHALTGERÄT
15	2F1/2F2	R110	EA20		DEBLOKACIA BLOKOVANIA	KON ZAC	22	27	0	39	75	SC	R/C	N	N	PV	R/C	Y			SCHALTGERÄT

Proprietary data, company confidential. All rights reserved.
Confia a tire da secret dentreprise. Tous droits reservis.
Comunicado como segredo empresarial. Reservados todos os direitos.
Comunicado como secreto industrial. Nos reservamos todos los derechos.

The reproduction, transmission or use of this document or its contents is not permitted without expires written authority. Offenders will be liable for damages. All rights, including rights created by patent grant or registration of a utility model or design, are reserved.

Documentation structur: Standard
Source file: KO050722.ODA

Rev.	Remarks	Date	Name	Norm	
			Date	22.07.2005	
			Drawn	LANG	
			Appr.		

VSZ KOSICE
Orig./Repl. 1/Repl. by

SIEMENS AG
ISATOOLS

Substation control system 6MB
Compact I/O unit:
Commands
Table

T = /BG 118
+
-S106
Page 118

Station: UW KOSICE
Device: EA20 EAG
Device type: 6MB5220-1

Output	Connect designation	Switch interlocking
1	3C1/3C2	
2	3C3/3C4	
3	4C1/4C2	
4	4C3/4C4	
5	4D1/4D2	
6	4D3/4D4	
7	2D1/2D2	
9	3E1/3E2	
10	3E3/3E4	
11	4E1/4E2	
12	4E3/4E4	
13	4F1/4F2	SCHALTVERRIEGELUNG Q8 bei UG1 L1
14	4F3/4F4	SCHALTVERRIEGELUNG Q8 bei UG1 L1
15	2F1/2F2	

Proprietary data, company confidential. All rights reserved.
Confidential and secret d'entreprise. Tous droits réservés.
Comunicado como segredo empresarial. Reservados todos os direitos.
Confiado como secreto industrial. Nos reservamos todos los derechos.

The reproduction, transmission or use of this document or its
is not permitted without express written authority.
Offenders will be liable for damages. All rights, including rights
created by patent grant or registration of a utility model or design, are reserved

Documentation structur: Standard
Source file: KO050722.ODA

Rc	Remarks	Date	Name	Date	22.07.2005	VSZ KOSICE	SIEMENS AG ISA TOOLS	Substation control system 6MB
				Drawn	LANG			Compact I/O unit:
				Appr.				Commands
				Norm		Orig./Repl. 1/Repl. by		Table

T = /BG 119
+
-S106
Page

Station: UW KOSICE
Device: EA20 EAG
Device type: 6MB5220-1

Analog channel no.	Connect designation	Section	Bay	Logical device	Lower limit	Display value	Dimension	Zero suppression f. display in %	Text for display	Bay blockage	Thres val. for switchover in %	Process analog value in I/O uni	With live-zero monitoring	Display in diagram
1	STROM L2	R110	EA20	MESSWERTE STROM	PRUD L2	600.00	A	1.0	PRUD L2	N	0.0	N	PV	Y
2	STROM L1	R110	EA20	MESSWERTE STROM	PRUD L1	600.00	A	1.0	PRUD L1	N	0.0	N	PV	N
3	STROM L3	R110	EA20	MESSWERTE STROM	PRUD L3	600.00	A	1.0	PRUD L3	N	0.0	N	PV	N
4	UL1-UL2	R110	EA20	MESSWERTE SPANNUNG	NAPATIE L1	63.50	KV	10.0	NAPATIE L1	N	0.0	N	PV	Y
5	UL1-UL3												PV	
6	UL2-UL3												PV	
7	W-LEISTUNG	R110	EA20		VYKON CINNY	114.31	MW	1.0	VYKON CINNY	N	0.0	N	PV	Y
8	B-LEISTUNG												PV	

Proprietary data, company confidential. All rights reserved
Confia a tire de secret d'entreprise. Tous droits réservés.
Comunicado como segredo empresarial. Reservados todos os direitos.
Confiado como secreto industrial. Nos reservamos todos los derechos.
The reproduction, transmission or use of this document or its contents is not permitted without express written authority. Offenders will be liable for damages. All rights, including rights created by patent grant or registration of a utility model or design, are reserved

Documentation structur: Standard
Source file: KO050722.ODA

Rev.	Remarks	Date	Name	Norm	Date 22.07.2005	Drawn LANG	Appr.	Orig./Repl. 1/Repl. by

VSZ KOSICE

SIEMENS AG
ISAOOLS

Substation control system 6MB
Compact I/O unit:
Analog values
Table

T = /BG 120
+
-S106
Page 120

Station: UW KOSICE
Device: EA20 EAG
Device type: 6MB5220-1

Analog channel no.	Connect designation	Archive	Analog recording	Recording mode	No. of val. to be averaged	Scan interval in s	Analog value type	Max. value of analog value	Keep non-return pointer	Calculated demand value	Derive percentage value	Derive metered value	Static limit monitoring: Filtering time in s	Lower limit 1	Indication at lower limit 1	Lower limit 2	Indication at lower limit 2	Upper limit 1	Indication at higher limit 1	Upper limit 2	Indication at higher limit 2
1	STROM L2	Y	PERM	Analog value direct		900	CUR	720.00	PV	PV	PV	PV	0					719.90	PRUD L2 HH1		
2	STROM L1	Y	PERM	Analog value direct		900	CUR	720.00	PV	PV	PV	PV	0					719.90	PRUD L1 HH1		
3	STROM L3	Y	PERM	Analog value direct		900	CUR	720.00	PV	PV	PV	PV	0					719.90	PRUD L3 HH1		
4	UL1-UL2	Y	PERM	Analog value direct		900	PV	76.21	PV	PV	PV	PV	0	57.15	NAPATIE L1 DH1	44.45	NAPATIE L1 DH2	69.85	NAPATIE L1 HH1		
5	UL1-UL3											PV									
6	UL2-UL3											PV									
7	W-LEISTUNG	Y	PERM	Analog value direct		900	AP	137.17	PV	PV	PV	PV									
8	B-LEISTUNG											PV									

Proprietary data, company confidential. All rights reserved.
Confia a titre de secret d'entreprise. Tous droits reservés.
Comunicado como segredo empresarial. Reservados todos os direitos.
Confiado como secreto industrial. Nos reservamos todos los derechos.

The reproduction, transmission or use of this document or its is not permitted without express written authority.
Offenders will be liable for damages. All rights, including rights created by patent grant or registration of a utility model or design, are reserved

Documentation structur: Standard
Source file: KO050722.ODA

Rc	Remarks	Date	Name	Date	22.07.2005	VSZ KOSICE	SIEMENS AG ISAOOLS	Substation control system 6MB
				Drawn	LANG			Compact I/O unit:
				Appr.				Analog values
				Norm		Orig./Repl. 1/Repl. by		Table

T = /BG 121
+
-S106
Page

Station: UW KOSICE
Device: EA20 EAG
Device type: 6MB5220-1

Analog channel no.	Connect designation	Teletrans. FP raw val. Master station	Name of telegram	Name of info element
1	STROM L2	IEC 870-5-101	Meßwerttelegramm	880
2	STROM L1	IEC 870-5-101	Meßwerttelegramm	881
3	STROM L3	IEC 870-5-101	Meßwerttelegramm	882
4	UL1-UL2	IEC 870-5-101	Meßwerttelegramm	883
5	UL1-UL3			
6	UL2-UL3			
7	W-LEISTUNG	IEC 870-5-101	Meßwerttelegramm	884
8	B-LEISTUNG			

Proprietary data, company confidential. All rights reserved.
Confie a titre de secret d'entreprise. Tous droits réservés.
Comunicado como segredo empresarial. Reservados todos os direitos.
Confiado como secreto industrial. Nos reservamos todos los derechos.

The reproduction, transmission or use of this document or its contents is not permitted without express written authority. Offenders will be liable for damages. All rights, including rights created by patent grant or registration of a utility model or design, are reserved.

Documentation structur: Standard
Source file: KO050722.ODA

Rev.	Remarks	Date	Name	Norm
			Date	22.07.2005
			Drawn	LANG
			Appr.	

VSZ KOSICE
Orig./Repl. 1/Repl. by

SIEMENS AG
ISATOOLS

Substation control system 6MB
Compact I/O unit:
Analog values
Table

T = /BG 122
+
-S106
Page 122

Proprietary data, company confidential. All rights reserved.
Confiea a the da secret dentreprise. Tous drcits rseirvs
Comunicado como segredo empresarial. Reservados todos os direitos
Confiado como secreto industrial. Ros reservamos tcods los derechos
The reproduction, transmission or use of this document or its
is not permited without expres written authority.
Offenders will be liable for damages. All rights, including rights
created by patent grant or registration of a utility model or design, are reserved

Station: UW KOSICE
Device: EA21 EAG
Device type: 6MB5220-1
Packet numbe 8
Version no.: 1

Connection:
Device: LZG
Subrack: LZG-BGT
Module: AST 2
UART: 2
MUX: 6

General definitions:

Rated auxiliary voltage: 60 V, 110 V, 125 V DC
LZG monitoring: Indication
Ext. met. value tr. comm.: No
LIVE contact: No
Buffer type: I/O unit normal
Timeout monitoring: Yes

Scan cycle for ind. input:

Scan cycle for fault ind.: 10
Scan number 02: 10
Scan cycle for pos. ind.: 100
Scan number 03: 3
Scan cycle for op. ind.: 1000
Scan number 04: 1

Specifications for chatter dis

Analog interval in s:
Blockage time in s:
Number of test cycle
Number of block. cyc

Input	Connect designation	Section	Bay	Logical device	Lower limit	Value text	Column section	Column bay	Column logical device	Column information	Column value text	With command	Indication type	Entry in event list	Entry in alarm list	Acknowledge	Display in indication area	Indication class	Entry in SML	Display in diagram	Display of intermed. pos.	Acknowledge	Display under voltage level	Indication class	Archive	Operational indications	Protection indications
1	8D4	R110	EA21	ODPOJOVAC Q2	SCHALTZUSTAND	vyp.	22	27	39	0	75	LZM	DI	O					N	Y	N	O	Y	2	R	Y	N
2	7D1	R110	EA21	ODPOJOVAC Q2	SCHALTZUSTAND	zap.	22	27	39	0	75	LZM	DI	O					N	Y	N	O	Y	2	R	Y	N
3	7D2	R110	EA21	ODPOJOVAC Q7	SCHALTZUSTAND	vyp.	22	27	39	0	75	LZM	DI	O					N	Y	N	O	Y	2	R	Y	N
4	7D3	R110	EA21	ODPOJOVAC Q7	SCHALTZUSTAND	zap.	22	27	39	0	75	LZM	DI	O					N	Y	N	O	Y	2	R	Y	N
5	7D4	R110	EA21	VYPINAC Q0	SCHALTZUSTAND	vyp.	22	27	39	0	75	LZM	DI	O					N	Y	N	O	Y	2	R	Y	N
6	6D1	R110	EA21	VYPINAC Q0	SCHALTZUSTAND	zap.	22	27	39	0	75	LZM	DI	O					N	Y	N	O	Y	2	R	Y	N
7	6D3	R110	EA21	ODPOJOVAC Q9	SCHALTZUSTAND	vyp.	22	27	39	0	75	LZM	DI	O					N	Y	N	O	Y	2	R	Y	N
8	6D4	R110	EA21	ODPOJOVAC Q9	SCHALTZUSTAND	zap.	22	27	39	0	75	LZM	DI	O					N	Y	N	O	Y	2	R	Y	N
9	5D1	R110	EA21	ODPOJOVAC Q1	SCHALTZUSTAND	vyp.	22	27	39	0	75	LZM	DI	O					N	Y	N	O	Y	2	R	Y	N
10	5D2	R110	EA21	ODPOJOVAC Q1	SCHALTZUSTAND	zap.	22	27	39	0	75	LZM	DI	O					N	Y	N	O	Y	2	R	Y	N
11	5D3	R110	EA21		8TK PORUCHA	KON ZAC	22	27	0	39	75	PV	SI	R/C	Y	R/C	Y	1	N	N					R/C	Y	N
13	8FA	R110	EA21	ODPOJOVAC ZEMNIACI Q8	SCHALTZUSTAND	vyp.	22	27	39	0	75	LZM	DI	O					N	Y	N	O	Y	2	R	Y	N
14	7F1	R110	EA21	ODPOJOVAC ZEMNIACI Q8	SCHALTZUSTAND	zap.	22	27	39	0	75	LZM	DI	O					N	Y	N	O	Y	2	R	Y	N
15	7F2	R110	EA21		VYPN.VYPINAC.BEZ POVELU	KON ZAC	22	27	0	39	75	PV	TR	O	Y	O	Y	1	N	N					R	Y	N
16	7F3	R110	EA21		PREVADZKA S1	KON ZAC	22	27	0	39	75	PV	SI	R/C	Y	R/C	Y	1	N	Y		N	N		R/C	Y	N
17	7F4	R110	EA21		S5 POLOHA VYPN./MIESTNE	KON ZAC	22	27	0	39	75	PV	SI	R/C	Y	R/C	Y	1	N	Y		N	N		R/C	Y	N
18	6F1	R110	EA21		CHYBA OBSLUHY	KON ZAC	22	27	0	39	75	PV	SI	R/C	N				N	N					R/C	Y	N
19	6F3	R110	EA21		PREKROCENIE CASU BEHU	KON ZAC	22	27	0	39	75	PV	SI	R/C	N				N	N					R	Y	N
20	6F4	R110	EA21		PORUCHA VYPINACA	KON ZAC	22	27	0	39	75	PV	SI	R/C	Y	R/C	Y	1	N	N					R/C	N	Y
21	5F1	R110	EA21		STRATA js./st. NAPATI	KON ZAC	22	27	0	39	75	PV	SI	R/C	Y	R/C	Y	1	N	N					R/C	N	Y
22	5F2																										
23	5F3																										

Documentation structur: Standard
Source file: KO050722.ODA

Date	22.07.2005	VSZ KOSICE	SIEMENS AG ISATOOLS
Drawn	LANG		
Appr.			
Norm		Orig./Repl. 1/Repl. by	

Substation control system 6MB
Compact I/O unit:
Indications
Table

T = /BG 123
+
-S106
Page

Remarks | Date | Name

Proprietary data, company confidential. All rights reserved.
Confidential data, secrecy of correspondence, Tous droits réservés.
Comunicado como segredo empresarial. Reservados todos os direitos.
Confiado como secreto industrial. Nos reservamos todos los derechos.
The reproduction, transmission or use of this document or its contents is not permitted without express written authority.
Offenders will be liable for damages. All rights, including rights created by patent grant or registration of a utility model or design, are reserved.

Station: UW KOSICE
Device: EA21 EAG
Device type: 6MB5220-1
Packet numbe 8
Version no.: 1

Connection:
Device: LZG
Subrack: LZG-BGT
Module: AST 2
UART: 2
MUX: 6

General definitions:

Rated auxiliary voltage:	60 V, 110 V, 125 V DC
LZG monitoring:	Indication
Ext. met. value tr. comm.:	No
LIVE contact:	No
Buffer type:	I/O unit normal
Timeout monitoring:	Yes

Scan cycle for ind. input:

Scan cycle for fault ind.:	10
Scan number 02:	10
Scan cycle for pos. ind.:	100
Scan number 03:	3
Scan cycle for op. ind.:	1000
Scan number 04:	1

Specifications for chatter dis

Analog interval in s:
Blockage time in s:
Number of test cycle
Number of block. cyc

Input	Connect designation	Filt. of raised & cleared	Filtering of intermed. pos.	Bay blockage	Monitored as feedback	Checkback monit. time in s	Command derivation	Indication derivation	Remote transmission FP: Master station	Name of telegram	Name of info element
1	8D4		N	N	Y	20.0			IEC 870-5-101	Meldungstelegramm DM	552
2	7D1		N	N	Y	20.0			IEC 870-5-101	Meldungstelegramm DM	552
3	7D2		N	N	Y	20.0			IEC 870-5-101	Meldungstelegramm DM	553
4	7D3		N	N	Y	20.0			IEC 870-5-101	Meldungstelegramm DM	553
5	7D4		N	N	Y	1.0			IEC 870-5-101	Meldungstelegramm DM	550
6	6D1		N	N	Y	1.0			IEC 870-5-101	Meldungstelegramm DM	550
7	6D3		N	N	Y	20.0			IEC 870-5-101	Meldungstelegramm DM	555
8	6D4		N	N	Y	20.0			IEC 870-5-101	Meldungstelegramm DM	555
9	5D1		N	N	Y	20.0			IEC 870-5-101	Meldungstelegramm DM	551
10	5D2		N	N	Y	20.0			IEC 870-5-101	Meldungstelegramm DM	551
11	5D3	N		N	N		Alarm 1 (Hupenbefehl)	KVIT 8TK			
13	8FA		N	N	Y	20.0			IEC 870-5-101	Meldungstelegramm DM	554
14	7F1		N	N	Y	20.0			IEC 870-5-101	Meldungstelegramm DM	554
15	7F2			N	N		Alarm 1 (Hupenbefehl)	KVIT 8TK			
16	7F3	N		N	N		Alarm 1 (Hupenbefehl)				
17	7F4	N		N	N		Alarm 1 (Hupenbefehl)				
18	6F1	N		N	N		Alarm 1 (Hupenbefehl)	KVIT 8TK			
19	6F3	N		N	N		Alarm 1 (Hupenbefehl)	KVIT 8TK			
20	6F4	N		N	N		Alarm 1 (Hupenbefehl)				
21	5F1	N		N	N		Alarm 1 (Hupenbefehl)				
22	5F2										
23	5F3										

Documentation structur: Standard
Source file: KO050722.ODA

Rev.	Remarks	Date	Name	Norm	Date 22.07.2005	Drawn LANG	Appr.	Orig./Repl. 1/Repl. by

VSZ KOSICE

SIEMENS AG
ISATOOLS

Substation control system 6MB
Compact I/O unit:
Indications
Table

T = /BG 124
+
-S106
Page 124

Station: UW KOSICE
Device: EA21 EAG
Device type: 6MB5220-1

Output	Connect designation	Section	Bay	Logical device	Lower limit	Value text	Column section	Column bay	Column logical device	Column information	Column value text	Type of command	Entry in event list	Entry in alarm list	Entry in SML	Display in diag. as select. field	Archive	Operational indications	SW termination time in s	Checkback monit. time in s	Interlocking type:
1	3C1/3C2	R110	EA21	ODPOJOVAC Q2	SCHALTZUSTAND	8D4 vyp.	22	27	39	0	75	DC	O		N	PV	R	Y	0.6	20.0	SCHALTGERÄT
2	3C3/3C4	R110	EA21	ODPOJOVAC Q2	SCHALTZUSTAND	8D4 zap.	22	27	39	0	75	DC	O		N	PV	R	Y	0.6	20.0	SCHALTGERÄT
3	4C1/4C2	R110	EA21	ODPOJOVAC Q7	SCHALTZUSTAND	7D2 vyp.	22	27	39	0	75	DC	O		N	PV	R	Y	0.6	20.0	SCHALTGERÄT
4	4C3/4C4	R110	EA21	ODPOJOVAC Q7	SCHALTZUSTAND	7D2 zap.	22	27	39	0	75	DC	O		N	PV	R	Y	0.6	20.0	SCHALTGERÄT
5	4D1/4D2	R110	EA21	VYPINAC Q0	SCHALTZUSTAND	7D4 vyp.	22	27	39	0	75	DC	O		N	PV	R	Y	0.6	1.0	SCHALTGERÄT
6	4D3/4D4	R110	EA21	VYPINAC Q0	SCHALTZUSTAND	7D4 zap.	22	27	39	0	75	DC	O		N	PV	R	Y	0.6	1.0	SCHALTGERÄT
7	2D1/2D2	R110	EA21		KVITOVANIE	KON ZAC	22	27	0	39	75	SC	O	N	N	PV	R	N	0.6		SCHALTGERÄT
9	3E1/3E2	R110	EA21	ODPOJOVAC Q9	SCHALTZUSTAND	6D3 vyp.	22	27	39	0	75	DC	O		N	PV	R	Y	0.6	20.0	SCHALTGERÄT
10	3E3/3E4	R110	EA21	ODPOJOVAC Q9	SCHALTZUSTAND	6D3 zap.	22	27	39	0	75	DC	O		N	PV	R	Y	0.6	20.0	SCHALTGERÄT
11	4E1/4E2	R110	EA21	ODPOJOVAC Q1	SCHALTZUSTAND	5D1 vyp.	22	27	39	0	75	DC	O		N	PV	R	Y	0.6	20.0	SCHALTGERÄT
12	4E3/4E4	R110	EA21	ODPOJOVAC Q1	SCHALTZUSTAND	5D1 zap.	22	27	39	0	75	DC	O		N	PV	R	Y	0.6	20.0	SCHALTGERÄT
13	4F1/4F2	R110	EA21	ODPOJOVAC ZEMNIACI Q8	SCHALTZUSTAND	8FA vyp.	22	27	39	0	75	DC	O		N	PV	R	Y	0.6	20.0	SCHALTGERÄT
14	4F3/4F4	R110	EA21	ODPOJOVAC ZEMNIACI Q8	SCHALTZUSTAND	8FA zap.	22	27	39	0	75	DC	O		N	PV	R	Y	0.6	20.0	SCHALTGERÄT
15	2F1/2F2	R110	EA21		DEBLOKACIA BLOKOVANIA	KON ZAC	22	27	0	39	75	SC	R/C	N	N	PV	R/C	Y			SCHALTGERÄT

Proprietary data, company confidential. All rights reserved
Confie a titre de secret d'entreprise. Tous droits reservs.
Comunicado como segredo empresarial. Reservados todos os direitos
Comunicado como secreto industrial. Nos reservamos todos los derechos
The reproduction, transmission or use of this document or its contents is not permitted without express written authority. Offenders will be liable for damages. All rights, including rights created by patent grant or registration of a utility model or design, are reserved

Documentation structure: Standard
Source file: KO050722.ODA

Date	22.07.2005	VSZ KOSICE	SIEMENS AG ISATOOLS	Substation control system 6MB	T = /BG 125
Drawn	LANG			Compact I/O unit:	+
Appr.				Commands	-S106 Page
Norm		Orig./Repl. 1/Repl. by		Table	

Remarks | Date | Name

Station: UW KOSICE
Device: EA21 EAG
Device type: 6MB5220-1

Output	Connect designation	Switch interlocking
1	3C1/3C2	
2	3C3/3C4	
3	4C1/4C2	
4	4C3/4C4	
5	4D1/4D2	
6	4D3/4D4	
7	2D1/2D2	
9	3E1/3E2	
10	3E3/3E4	
11	4E1/4E2	
12	4E3/4E4	
13	4F1/4F2	SCHALTVERRIEGELUNG Q8 bei UG1 L1
14	4F3/4F4	SCHALTVERRIEGELUNG Q8 bei UG1 L1
15	2F1/2F2	

Proprietary data, company confidential. All rights reserved.
Confie a titre de secret d'entreprise. Tous droits réservés.
Comunicado como segredo empresarial. Reservados todos os direitos.
Confiado como secreto industrial. Nos reservamos todos los derechos.

The reproduction, transmission or use of this document or its is not permitted without expres written authority.
Offenders will be liable for damages. All rights, including rights created by patent grant or registration of a utility model or design, are reserved

Documentation structur: Standard
Source file: KO050722.ODA

Rev.	Remarks	Date	Name	Date	22.07.2005	VSZ KOSICE	SIEMENS AG ISA TOOLS	Substation control system 6MB
				Drawn	LANG			Compact I/O unit:
				Appr.				Commands
				Norm		Orig./Repl. 1/Repl. by		Table

T = /BG 126
+
-S106
Page 126

Station: UW KOSICE
Device: EA21 EAG
Device type: 6MB5220-1

Analog channel no.	Connect designation	Section	Bay	Logical device	Lower limit	Display value	Dimension	Zero suppression f. display in %	Text for display	Bay blockage	Thres val. for switchover in %	Process analog value in I/O uni	With live-zero monitoring	Display in diagram
1	STROM L2	R110	EA21	MESSWERTE STROM	PRUD L2	200.00	A	1.0	PRUD L2	N	0.0	N	PV	Y
2	STROM L1	R110	EA21	MESSWERTE STROM	PRUD L1	200.00	A	1.0	PRUD L1	N	0.0	N	PV	N
3	STROM L3	R110	EA21	MESSWERTE STROM	PRUD L3	200.00	A	1.0	PRUD L3	N	0.0	N	PV	N
4	UL1-UL2	R110	EA21	MESSWERTE SPANNUNG	NAPATIE L1	63.50	KV	10.0	NAPATIE L1	N	0.0	N	PV	Y
5	UL1-UL3												PV	
6	UL2-UL3												PV	
7	W-LEISTUNG	R110	EA21		VYKON CINNY	38.10	MW	1.0	VYKON CINNY	N	0.0	N	PV	Y
8	B-LEISTUNG												PV	

Proprietary data, company confidential. All rights reserved.
Confie a titre de secret d'entreprise. Tous droits reservés.
Comunicado como segredo empresarial. Reservados todos os direitos.
Confiado como secreto industrial. Nos reservamos todos los derechos.
The reproduction, transmission or use of this document or its is not permitted without express written authority.
Offenders will be liable for damages. All rights, including rights created by patent grant or registration of a utility model or design, are reserved

Documentation structur: Standard
Source file: KO050722.ODA

Rc	Remarks	Date	Name	Norm	Date 22.07.2005	Drawn LANG	Appr.	VSZ KOSICE	Orig./Repl. 1/Repl. by	SIEMENS AG ISAOOLS	Substation control system 6MB Compact I/O unit: Analog values Table	T = /BG 127 + -S106	Page

Station: UW KOSICE
Device: EA21 EAG
Device type: 6MB5220-1

Analog channel no.	Connect designation	Archive	Analog recording	Recording mode	No. of val. to be averaged	Scan interval in s	Analog value type	Max. value of analog value	Keep non-return pointer	Calculated demand value	Derive percentage value	Derive metered value	Static limit monitoring: Filtering time in s	Lower limit 1	Indication at lower limit 1	Lower limit 2	Indication at lower limit 2	Upper limit 1	Indication at higher limit 1	Upper limit 2	Indication at higher limit 2
1	STROM L2	Y	PERM	Analog value direct		900	CUR	240.00	PV	PV	PV	PV	0					239.90	PRUD L2 HH1		
2	STROM L1	Y	PERM	Analog value direct		900	CUR	240.00	PV	PV	PV	PV	0					239.90	PRUD L1 HH1		
3	STROM L3	Y	PERM	Analog value direct		900	CUR	240.00	PV	PV	PV	PV	0					239.90	PRUD L3 HH1		
4	UL1-UL2	Y	PERM	Analog value direct		900	PV	76.21	PV	PV	PV	PV	0	57.15	NAPATIE L1 DH1	44.45	NAPATIE L1 DH2	69.85	NAPATIE L1 HH1		
5	UL1-UL3											PV									
6	UL2-UL3											PV									
7	W-LEISTUNG	Y	PERM	Analog value direct		900	AP	45.72	PV	PV	PV	PV									
8	B-LEISTUNG											PV									

Proprietary data, company confidential. All rights reserved
Confia a tirre da secret d'entreprise. Tous droits reservs.
Comunicado como segredo empresarial. Reservados todos os direitos.
Confiado como secreto industrial. Nos reservamos todos los derechos.

The reproduction, transmission or use of this document or its is not permitted without expres written authority.
Offenders will be liable for damages. All rights, including rights created by patent grant or registration of a utility model or design, are reserved

Documentation structur: Standard
Source file: KO050722.ODA

Rev.	Remarks	Date	Name	Norm
			Date	22.07.2005
			Drawn	LANG
			Appr.	

VSZ KOSICE
Orig./Repl. 1/Repl. by

SIEMENS AG
ISAOOLS

Substation control system 6MB
Compact I/O unit:
Analog values
Table

T = /BG 128
+
-S106
Page 128

Station: UW KOSICE
Device: EA21 EAG
Device type: 6MB5220-1

Analog channel no.	Connect designation	Teletrans. FP raw val. Master station	Name of telegram	Name of info element
1	STROM L2	IEC 870-5-101	Meßwerttelegramm	960
2	STROM L1	IEC 870-5-101	Meßwerttelegramm	961
3	STROM L3	IEC 870-5-101	Meßwerttelegramm	962
4	UL1-UL2	IEC 870-5-101	Meßwerttelegramm	963
5	UL1-UL3			
6	UL2-UL3			
7	W-LEISTUNG	IEC 870-5-101	Meßwerttelegramm	964
8	B-LEISTUNG			

Proprietary data, company confidential. All rights reserved.
Confie a titre de secret d'entreprise. Tous droits reserv,s.
Comunicado como segredo empresarial. Reservados todos os direitos.
Confiado como secreto industrial. Nos reservamos todos los derechos.

The reproduction, transmission or use of this document or its is not permitted without express written authority. Offenders will be liable for damages. All rights, including rights created by patent grant or registration of a utility model or design, are reserved

Documentation structur: Standard
Source file: KO050722.ODA

Re	Remarks	Date	Name	Date	22.07.2005	VSZ KOSICE	SIEMENS AG SAIOOLS	Substation control system 6MB Compact I/O unit: Analog values Table	T = /BG 129 +
				Drawn	LANG				
				Appr.					-S106 Page
				Norm		Orig./Repl. 1/Repl. by			

Station: UW KOSICE
Device: EA23 EAG
Device type: 6MB5220-1
Packet numbe 8
Version no.: 1

Connection:
Device: LZG
Subrack: LZG-BGT
Module: AST 2
UART: 2
MUX: 5

General definitions:

Rated auxiliary voltage: 60 V, 110 V, 125 V DC
LZG monitoring: Indication
Ext. met. value tr. comm.: No
LIVE contact: No
Buffer type: I/O unit normal
Timeout monitoring: Yes

Scan cycle for ind. input:

Scan cycle for fault ind.: 10
Scan number 02: 10
Scan cycle for pos. ind.: 100
Scan number 03: 3
Scan cycle for op. ind.: 1000
Scan number 04: 1

Specifications for chatter dis

Analog interval in s:
Blockage time in s:
Number of test cycle
Number of block. cyc

Input	Connect designation	Section	Bay	Logical device	Lower limit	Value text	Column section	Column bay	Column logical device	Column information	Column value text	With command	Indication type	Entry in event list	Entry in alarm list	Acknowledge	Display in indication area	Indication class	Entry in SML	Display in diagram	Display of intermed. pos.	Acknowledge	Display under voltage level	Indication class	Archive	Operational indications	Protection indications
1	8D4	R110	EA23	ODPOJOVAC Q2	SCHALTZUSTAND	vyp.	22	27	39	0	75	LZM	DI	O					N	Y	N	O	Y	2	R	Y	N
2	7D1	R110	EA23	ODPOJOVAC Q2	SCHALTZUSTAND	zap.	22	27	39	0	75	LZM	DI	O					N	Y	N	O	Y	2	R	Y	N
3	7D2	R110	EA23	ODPOJOVAC Q7	SCHALTZUSTAND	vyp.	22	27	39	0	75	LZM	DI	O					N	Y	N	O	Y	2	R	Y	N
4	7D3	R110	EA23	ODPOJOVAC Q7	SCHALTZUSTAND	zap.	22	27	39	0	75	LZM	DI	O					N	Y	N	O	Y	2	R	Y	N
5	7D4	R110	EA23	VYPINAC Q0	SCHALTZUSTAND	vyp.	22	27	39	0	75	LZM	DI	O					N	Y	N	O	Y	2	R	Y	N
6	6D1	R110	EA23	VYPINAC Q0	SCHALTZUSTAND	zap.	22	27	39	0	75	LZM	DI	O					N	Y	N	O	Y	2	R	Y	N
7	6D3	R110	EA23	ODPOJOVAC Q9	SCHALTZUSTAND	vyp.	22	27	39	0	75	LZM	DI	O					N	Y	N	O	Y	2	R	Y	N
8	6D4	R110	EA23	ODPOJOVAC Q9	SCHALTZUSTAND	zap.	22	27	39	0	75	LZM	DI	O					N	Y	N	O	Y	2	R	Y	N
9	5D1	R110	EA23	ODPOJOVAC Q1	SCHALTZUSTAND	vyp.	22	27	39	0	75	LZM	DI	O					N	Y	N	O	Y	2	R	Y	N
10	5D2	R110	EA23	ODPOJOVAC Q1	SCHALTZUSTAND	zap.	22	27	39	0	75	LZM	DI	O					N	Y	N	O	Y	2	R	Y	N
11	5D3	R110	EA23		8TK PORUCHA	KON ZAC	22	27	0	39	75	PV	SI	R/C	Y	R/C	Y	1	N	N					R/C	Y	N
13	8FA	R110	EA23	ODPOJOVAC ZEMNIACI Q8	SCHALTZUSTAND	vyp.	22	27	39	0	75	LZM	DI	O					N	Y	N	O	Y	2	R	Y	N
14	7F1	R110	EA23	ODPOJOVAC ZEMNIACI Q8	SCHALTZUSTAND	zap.	22	27	39	0	75	LZM	DI	O					N	Y	N	O	Y	2	R	Y	N
15	7F2	R110	EA23		VYPN.VYPINAC.BEZ POVELU	KON ZAC	22	27	0	39	75	PV	TR	O	Y	O	Y	1	N	N					R	Y	N
16	7F3	R110	EA23		PREVADZKA S1	KON ZAC	22	27	0	39	75	PV	SI	R/C	Y	R/C	Y	1	N	Y		N	N		R/C	Y	N
17	7F4	R110	EA23		S5 POLOHA VYPN./MIESTNE	KON ZAC	22	27	0	39	75	PV	SI	R/C	Y	R/C	Y	1	N	Y		N	N		R/C	Y	N
18	6F1	R110	EA23		CHYBA OBSLUHY	KON ZAC	22	27	0	39	75	PV	SI	R/C	N				N	N					R/C	Y	N
19	6F3	R110	EA23		PREKROCENIE CASU BEHU	KON ZAC	22	27	0	39	75	PV	SI	R/C	N				N	N					R	Y	N
20	6F4	R110	EA23		PORUCHA VYPINACA	KON ZAC	22	27	0	39	75	PV	SI	R/C	Y	R/C	Y	1	N	N					R/C	N	Y
21	5F1	R110	EA23		STRATA js./st. NAPATI	KON ZAC	22	27	0	39	75	PV	SI	R/C	Y	R/C	Y	1	N	N					R/C	N	Y
22	5F2																										
23	5F3																										

Proprietary data, company confidential. All rights reserved
Confia a ltre de secret d'entreprise. Tous droits r.serv.s.
Comunicado como segredo empresarial. Reservados todos os direitos.
Confiado como secreto industrial. Nos reservamos todos los derechos.
The reproduction, transmission or use of this document or its contents is not permitted without expres written authority. Offenders will be liable for damages. All rights, including rights created by patent grant or registration of a utility model or design, are reserved

Documentation structure: Standard
Source file: KO050722.ODA

Rev.	Remarks	Date	Name Norm	Date 22.07.2005	Drawn LANG	Appr.	Orig./Repl. 1/Repl. by

VSZ KOSICE
SIEMENS AG
ISAGOOLS
Substation control system 6MB
Compact I/O unit:
Indications
Table

T = /BG 130
+
-S106
Page 130

Proprietary data, company confidential. All rights reserved.
Con la ata de secreto de empresa. Todos derechos reservados.
Com dados de segredo de empresa. Reservados todos os direitos.
Con la ab como secreto industrial. Nos reservamos todos los derechos.

The reproduction, transmission or use of this document or its contents is not permitted without express written authority. Offenders will be liable for damages. All rights, including rights created by patent grant or registration of a utility model or design, are reserved.

Station: UW KOSICE
Device: EA23 EAG
Device type: 6MB5220-1
Packet numbe 8
Version no.: 1

Connection:
Device: LZG
Subrack: LZG-BGT
Module: AST 2
UART: 2
MUX: 5

General definitions:

Rated auxiliary voltage:	60 V, 110 V, 125 V DC
LZG monitoring:	Indication
Ext. met. value tr. comm.:	No
LIVE contact:	No
Buffer type:	I/O unit normal
Timeout monitoring:	Yes

Scan cycle for ind. input:

Scan cycle for fault ind.:	10
Scan number 02:	10
Scan cycle for pos. ind.:	100
Scan number 03:	3
Scan cycle for op. ind.:	1000
Scan number 04:	1

Specifications for chatter dis

Analog interval in s:
Blockage time in s:
Number of test cycle
Number of block. cyc

Input	Connect designation	Filt. of raised & cleared	Filtering of intermed. pos.	Bay blockage	Monitored as feedback	Checkback monit. time in s	Command derivation	Indication derivation	Remote transmission FP: Master station	Name of telegram	Name of info element
1	8D4		N	N	Y	20.0			IEC 870-5-101	Meldungstelegramm DM	492
2	7D1		N	N	Y	20.0			IEC 870-5-101	Meldungstelegramm DM	492
3	7D2		N	N	Y	20.0			IEC 870-5-101	Meldungstelegramm DM	493
4	7D3		N	N	Y	20.0			IEC 870-5-101	Meldungstelegramm DM	493
5	7D4		N	N	Y	1.0			IEC 870-5-101	Meldungstelegramm DM	490
6	6D1		N	N	Y	1.0			IEC 870-5-101	Meldungstelegramm DM	490
7	6D3		N	N	Y	20.0			IEC 870-5-101	Meldungstelegramm DM	495
8	6D4		N	N	Y	20.0			IEC 870-5-101	Meldungstelegramm DM	495
9	5D1		N	N	Y	20.0			IEC 870-5-101	Meldungstelegramm DM	491
10	5D2		N	N	Y	20.0			IEC 870-5-101	Meldungstelegramm DM	491
11	5D3	N		N	N		Alarm 1 (Hupenbefehl)	KVIT 8TK			
13	8FA		N	N	Y	20.0			IEC 870-5-101	Meldungstelegramm DM	494
14	7F1		N	N	Y	20.0			IEC 870-5-101	Meldungstelegramm DM	494
15	7F2			N	N		Alarm 1 (Hupenbefehl)	KVIT 8TK			
16	7F3	N		N	N		Alarm 1 (Hupenbefehl)				
17	7F4	N		N	N		Alarm 1 (Hupenbefehl)				
18	6F1	N		N	N		Alarm 1 (Hupenbefehl)	KVIT 8TK			
19	6F3	N		N	N		Alarm 1 (Hupenbefehl)	KVIT 8TK			
20	6F4	N		N	N		Alarm 1 (Hupenbefehl)				
21	5F1	N		N	N		Alarm 1 (Hupenbefehl)				
22	5F2										
23	5F3										

Documentation structur: Standard
Source file: KO050722.ODA

Date	22.07.2005	VSZ KOSICE	SIEMENS AG ISAIOOLS	Substation control system 6MB	T = /BG 131
Drawn	LANG			Compact I/O unit:	+
Appr.				Indications	-S106
Norm		Orig./Repl. 1/Repl. by		Table	Page

Remarks | Date | Name

Station: UW KOSICE
Device: EA23 EAG
Device type: 6MB5220-1

Output	Connect designation	Section	Bay	Logical device	Lower limit	Value text	Column section	Column bay	Column logical device	Column information	Column value text	Type of command	Entry in event list	Entry in alarm list	Entry in SML	Display in diag. as select. field	Archive	Operational indications	SW termination time in s	Checkback monit. time in s	Interlocking type:
1	3C1/3C2	R110	EA23	ODPOJOVAC Q2	SCHALTZUSTAND	8D4 vyp.	22	27	39	0	75	DC	O		N	PV	R	Y	0.6	20.0	SCHALTGERÄT
2	3C3/3C4	R110	EA23	ODPOJOVAC Q2	SCHALTZUSTAND	8D4 zap.	22	27	39	0	75	DC	O		N	PV	R	Y	0.6	20.0	SCHALTGERÄT
3	4C1/4C2	R110	EA23	ODPOJOVAC Q7	SCHALTZUSTAND	7D2 vyp.	22	27	39	0	75	DC	O		N	PV	R	Y	0.6	20.0	SCHALTGERÄT
4	4C3/4C4	R110	EA23	ODPOJOVAC Q7	SCHALTZUSTAND	7D2 zap.	22	27	39	0	75	DC	O		N	PV	R	Y	0.6	20.0	SCHALTGERÄT
5	4D1/4D2	R110	EA23	VYPINAC Q0	SCHALTZUSTAND	7D4 vyp.	22	27	39	0	75	DC	O		N	PV	R	Y	0.6	1.0	SCHALTGERÄT
6	4D3/4D4	R110	EA23	VYPINAC Q0	SCHALTZUSTAND	7D4 zap.	22	27	39	0	75	DC	O		N	PV	R	Y	0.6	1.0	SCHALTGERÄT
7	2D1/2D2	R110	EA23		KVITOVANIE	KON ZAC	22	27	0	39	75	SC	O	N	N	PV	R	N	0.6		SCHALTGERÄT
9	3E1/3E2	R110	EA23	ODPOJOVAC Q9	SCHALTZUSTAND	6D3 vyp.	22	27	39	0	75	DC	O		N	PV	R	Y	0.6	20.0	SCHALTGERÄT
10	3E3/3E4	R110	EA23	ODPOJOVAC Q9	SCHALTZUSTAND	6D3 zap.	22	27	39	0	75	DC	O		N	PV	R	Y	0.6	20.0	SCHALTGERÄT
11	4E1/4E2	R110	EA23	ODPOJOVAC Q1	SCHALTZUSTAND	5D1 vyp.	22	27	39	0	75	DC	O		N	PV	R	Y	0.6	20.0	SCHALTGERÄT
12	4E3/4E4	R110	EA23	ODPOJOVAC Q1	SCHALTZUSTAND	5D1 zap.	22	27	39	0	75	DC	O		N	PV	R	Y	0.6	20.0	SCHALTGERÄT
13	4F1/4F2	R110	EA23	ODPOJOVAC ZEMNIACI Q8	SCHALTZUSTAND	8FA vyp.	22	27	39	0	75	DC	O		N	PV	R	Y	0.6	20.0	SCHALTGERÄT
14	4F3/4F4	R110	EA23	ODPOJOVAC ZEMNIACI Q8	SCHALTZUSTAND	8FA zap.	22	27	39	0	75	DC	O		N	PV	R	Y	0.6	20.0	SCHALTGERÄT
15	2F1/2F2	R110	EA23		DEBLOKACIA BLOKOVANIA	KON ZAC	22	27	0	39	75	SC	R/C	N	N	PV	R/C	Y			SCHALTGERÄT

Proprietary data, company confidential. All rights reserved
Confie a titre de secret d'entreprise. Tous droits réservés.
Comunicado como segredo empresarial. Reservados todos os direitos.
Confiado como secreto industrial. Nos reservamos todos los derechos.
The reproduction, transmission or use of this document or its is not permitted without expres written authority.
Offenders will be liable for damages. All rights, including rights created by patent grant or registration of a utility model or design, are reserved

Documentation structur: Standard
Source file: KO050722.ODA

Rev.	Remarks	Date	Name	Date	22.07.2005	VSZ KOSICE	SIEMENS AG ISAOOLS	Substation control system 6MB
				Drawn	LANG			Compact I/O unit:
				Appr.				Commands
				Norm		Orig./Repl. 1/Repl. by		Table

T = /BG 132
+
-S106
Page 132

Station: UW KOSICE
Device: EA23 EAG
Device type: 6MB5220-1

Output	Connect designation	Switch interlocking
1	3C1/3C2	
2	3C3/3C4	
3	4C1/4C2	
4	4C3/4C4	
5	4D1/4D2	
6	4D3/4D4	
7	2D1/2D2	
9	3E1/3E2	
10	3E3/3E4	
11	4E1/4E2	
12	4E3/4E4	
13	4F1/4F2	SCHALTVERRIEGELUNG Q8 bei UG1 L1
14	4F3/4F4	SCHALTVERRIEGELUNG Q8 bei UG1 L1
15	2F1/2F2	

Proprietary data, company confidential. All rights reserved
Confie a titre de secret d'entreprise. Tous droits reservs.
Comunicado como segredo empresarial. Reservados todos os direitos.
Confiado como secreto industrial. Nos reservamos todos los derechos.

The reproduction, transmission or use of this document or its contents is not permitted without expres written authority. Offenders will be liable for damages. All rights, including rights created by patent grant or registration of a utility model or design, are reserved

Documentation structur: Standard
Source file: KO050722.ODA

				Date	22.07.2005	VSZ KOSICE	SIEMENS AG ISAOOLS
				Drawn	LANG		
				Appr.			
Re	Remarks	Date	Name	Norm		Orig./Repl. 1/Repl. by	

Substation control system 6MB
Compact I/O unit:
Commands
Table

T = /BG 133
+
-S106
Page

Station: UW KOSICE
Device: EA23 EAG
Device type: 6MB5220-1

Analog channel no.	Connect designation	Section	Bay	Logical device	Lower limit	Display value	Dimension	Zero suppression f. display in %	Text for display	Bay blockage	Thres val. for switchover in %	Process analog value in I/O uni	With live-zero monitoring	Display in diagram
1	STROM L2	R110	EA23	MESSWERTE STROM	PRUD L2	200.00	A	1.0	PRUD L2	N	0.0	N	PV	Y
2	STROM L1	R110	EA23	MESSWERTE STROM	PRUD L1	200.00	A	1.0	PRUD L1	N	0.0	N	PV	N
3	STROM L3	R110	EA23	MESSWERTE STROM	PRUD L3	200.00	A	1.0	PRUD L3	N	0.0	N	PV	N
4	UL1-UL2	R110	EA23	MESSWERTE SPANNUNG	NAPATIE L1	63.50	KV	10.0	NAPATIE L1	N	0.0	N	PV	Y
5	UL1-UL3												PV	
6	UL2-UL3												PV	
7	W-LEISTUNG	R110	EA23		VYKON CINNY	38.10	MW	1.0	VYKON CINNY	N	0.0	N	PV	Y
8	B-LEISTUNG												PV	

Proprietary data, company confidential. All rights reserved.
Confie a titre de secret d'entreprise. Tous droits reservés.
Comunicado como segredo empresarial. Reservados todos os direitos.
Confiado como secreto industrial. Nos reservamos todos los derechos.

The reproduction, transmission or use of this document or its is not permitted without expres written authority.
Offenders will be liable for damages. All rights, including rights created by patent grant or registration of a utility model or design, are reserved

Documentation structur: Standard
Source file: KO050722.ODA

Rev.	Remarks	Date	Name	Date	22.07.2005	VSZ KOSICE	SIEMENS AG ISA TOOLS	Substation control system 6MB Compact I/O unit: Analog values Table	T = /BG 134 + -S106	Page 134
				Drawn	LANG					
				Appr.						
				Norm		Orig./Repl. 1/Repl. by				

Station: UW KOSICE
Device: EA23 EAG
Device type: 6MB5220-1

Analog channel no.	Connect designation	Archive	Analog recording	Recording mode	No. of val. to be averaged	Scan interval in s	Analog value type	Max. value of analog value	Keep non-return pointer	Calculated demand value	Derive percentage value	Derive metered value	Static limit monitoring: Filtering time in s	Lower limit 1	Indication at lower limit 1	Lower limit 2	Indication at lower limit 2	Upper limit 1	Indication at higher limit 1	Upper limit 2	Indication at higher limit 2
1	STROM L2	Y	PERM	Analog value direct		900	CUR	240.00	PV	PV	PV	PV	0					239.90	PRUD L2 HH1		
2	STROM L1	Y	PERM	Analog value direct		900	CUR	240.00	PV	PV	PV	PV	0					239.90	PRUD L1 HH1		
3	STROM L3	Y	PERM	Analog value direct		900	CUR	240.00	PV	PV	PV	PV	0					239.90	PRUD L3 HH1		
4	UL1-UL2	Y	PERM	Analog value direct		900	PV	76.21	PV	PV	PV	PV	0	57.15	NAPATIE L1 DH1	44.45	NAPATIE L1 DH2	69.85	NAPATIE L1 HH1		
5	UL1-UL3											PV									
6	UL2-UL3											PV									
7	W-LEISTUNG	Y	PERM	Analog value direct		900	AP	45.72	PV	PV	PV	PV									
8	B-LEISTUNG											PV									

Proprietary data, company confidential. All rights reserved
Confiança a tiraa de secret dentreprise. Tous droits réservés.
Comunicado como segredo empresarial. Reservados todos os direitos.
Comunicado como secreto industrial. Nos reservamos todos los derechos.

The reproduction, transmission or use of this document or its contents is not permitted without express written authority. Offenders will be liable for damages. All rights, including rights created by patent grant or registration of a utility model or design, are reserved.

Documentation structure: Standard
Source file: KO050722.ODA

Rev	Remarks	Date	Name	Norm
			Date	22.07.2005
			Drawn	LANG
			Appr.	

VSZ KOSICE
Orig./Repl. 1/Repl. by

SIEMENS AG
ISAIOOLS

Substation control system 6MB
Compact I/O unit:
Analog values
Table

T = /BG 135
+
-S106
Page

Station: UW KOSICE
Device: EA23 EAG
Device type: 6MB5220-1

Analog channel no.	Connect designation	Teletrans. FP raw val. Master station	Name of telegram	Name of info element
1	STROM L2	IEC 870-5-101	Meßwerttelegramm	890
2	STROM L1	IEC 870-5-101	Meßwerttelegramm	891
3	STROM L3	IEC 870-5-101	Meßwerttelegramm	892
4	UL1-UL2	IEC 870-5-101	Meßwerttelegramm	893
5	UL1-UL3			
6	UL2-UL3			
7	W-LEISTUNG	IEC 870-5-101	Meßwerttelegramm	894
8	B-LEISTUNG			

Proprietary data, company confidential. All rights reserved.
Confie a titre de secret d'entreprise. Tous droits reservés.
Comunicado como segredo empresarial. Reservados todos os direitos.
Confiado como secreto industrial. Nos reservamos todos los derechos.

The reproduction, transmission or use of this document or its is not permitted without express written authority. Offenders will be liable for damages. All rights, including rights created by patent grant or registration of a utility model or design, are reserved

Documentation structur: Standard
Source file: KO050722.ODA

Rev.	Remarks	Date	Name	Date	22.07.2005	VSZ KOSICE	SIEMENS AG ISA TOOLS	Substation control system 6MB Compact I/O unit: Analog values Table	T = /BG 136 + -S106	Page 136
				Drawn	LANG					
				Appr.						
				Norm		Orig./Repl. 1/Repl. by				

Proprietary data, company confidential. All rights reserved.
Confia a ltre da secret d'entreprise. Tous droits r.serv.s.
Comunicado como segredo empresarial. Reservados todos os direitos.
Confiado como secreto industrial. Nos reservamos todos los derechos.

The reproduction, transmission or use of this document or its contents is not permitted without expres written authority. Offenders will be liable for damages. All rights, including rights created by patent grant or registration of a utility model or design, are reserved.

Station: UW KOSICE
Device: K01 EAG
Device type: 6MB5220-1
Packet numbe 8
Version no.: 1

Connection:
Device: LZG
Subrack: LZG-BGT
Module: AST 2
UART: 2
MUX: 12

General definitions:

Rated auxiliary voltage:	60 V, 110 V, 125 V DC
LZG monitoring:	Indication
Ext. met. value tr. comm.:	No
LIVE contact:	No
Buffer type:	I/O unit normal
Timeout monitoring:	Yes

Scan cycle for ind. input:

Scan cycle for fault ind.:	10
Scan number 02:	10
Scan cycle for pos. ind.:	100
Scan number 03:	3
Scan cycle for op. ind.:	1000
Scan number 04:	1

Specifications for chatter dis

Analog interval in s:
Blockage time in s:
Number of test cycle
Number of block. cyc

Input	Connect designation	Section	Bay	Logical device	Lower limit	Value text	Column section	Column bay	Column logical device	Column information	Column value text	With command	Indication type	Entry in event list	Entry in alarm list	Acknowledge	Display in indication area	Indication class	Entry in SML	Display in diagram	Display of intermed. pos.	Acknowledge	Display under voltage level	Indication class	Archive	Operational indications	Protection indications	Filt. of raised & cleared	Filtering of intermed. pos.	Bay blockage
1	8D4	T201	TERC	ODPOJOVAC Q9	SCHALTZUSTAND	vyp.	22	27	39	0	75	LZM	DI	O					N	Y	N	O	Y	2	R	Y	N		N	N
2	7D1	T201	TERC	ODPOJOVAC Q9	SCHALTZUSTAND	zap.	22	27	39	0	75	LZM	DI	O					N	Y	N	O	Y	2	R	Y	N		N	N
3	7D2																													
4	7D3																													
5	7D4	T201	TERC	ODPOJOVAC Q1	SCHALTZUSTAND	vyp.	22	27	39	0	75	LZM	DI	O					N	Y	N	O	Y	2	R	Y	N		N	N
6	6D1	T201	TERC	ODPOJOVAC Q1	SCHALTZUSTAND	zap.	22	27	39	0	75	LZM	DI	O					N	Y	N	O	Y	2	R	Y	N		N	N
7	6D3																													
8	6D4																													
9	5D1																													
10	5D2																													
11	5D3	T201	TERC		8TK PORUCHA	KON ZAC	22	27	0	39	75	PV	SI	R/C	Y	R/C	Y	1	N	N					R/C	Y	N	N		N
13	8FA	R10	KAB		STRATA OVL.NAP.OCHRANY	KON ZAC	22	27	0	39	75	PV	SI	R/C	Y	R/C	Y	1	N	N					R/C	N	Y	N		N
14	7F1	T201	TERC		VYP ISTICA PREVODNIKOV	KON ZAC	22	27	0	39	75	PV	SI	R/C	Y	R/C	Y	1	N	N					R/C	N	Y	N		N
15	7F2	T201	TERC		VYPN.VYPINAC.BEZ POVELU	KON ZAC	22	27	0	39	75	PV	TR	O	Y	O	Y	1	N	N					R	Y	N			N
16	7F3	T201	TERC		PREVADZKA S1	KON ZAC	22	27	0	39	75	PV	SI	R/C	Y	R/C	Y	1	N	Y		N	N		R/C	Y	N	N		N
17	7F4	T201	TERC		S5 POLOHA VYPN./MIESTNE	KON ZAC	22	27	0	39	75	PV	SI	R/C	Y	R/C	Y	1	N	Y		N	N		R/C	Y	N	N		N
18	6F1	T201	TERC		CHYBA OBSLUHY	KON ZAC	22	27	0	39	75	PV	SI	R/C	N				N	N					R/C	Y	N	N		N
19	6F3	T201	TERC		PREKROCENIE CASU BEHU	KON ZAC	22	27	0	39	75	PV	SI	R/C	N				N	N					R/C	Y	N	N		N
20	6F4	T201	TERC		PORUCHA VYPINACA	KON ZAC	22	27	0	39	75	PV	SI	R/C	Y	R/C	Y	1	N	N					R/C	N	Y	N		N
21	5F1	T201	TERC		STRATA OVL. NAPATIA	KON ZAC	22	27	0	39	75	PV	SI	R/C	Y	R/C	Y	1	N	N					R/C	N	Y	N		N
22	5F2	T201	TERC		VYPN. ISTICA 100V,50Hz	KON ZAC	22	27	0	39	75	PV	SI	R/C	Y	R/C	Y	1	N	N					R/C	N	Y	N		N
23	5F3	T201	TERC		ZEMNE SPOJENIE	KON ZAC	22	27	0	39	75	PV	SI	R/C	Y	R/C	Y	1	N	N					R/C	N	Y	N		N

Documentation structur: Standard
Source file: KO050722.ODA

Date	22.07.2005	VSZ KOSICE	SIEMENS AG ISATOOLS
Drawn	LANG		
Appr.			
Remarks	Date	Name Norm	Orig./Repl. 1/Repl. by

Substation control system 6MB
Compact I/O unit:
Indications
Table

T = /BG 137
+
-S106
Page

Station: UW KOSICE
Device: K01 EAG
Device type: 6MB5220-1
Packet numbe 8
Version no.: 1

Connection:
Device: LZG
Subrack: LZG-BGT
Module: AST 2
UART: 2
MUX: 12

General definitions:

Rated auxiliary voltage: 60 V, 110 V, 125 V DC
LZG monitoring: Indication
Ext. met. value tr. comm.: No
LIVE contact: No
Buffer type: I/O unit normal
Timeout monitoring: Yes

Scan cycle for ind. input:

Scan cycle for fault ind.: 10
Scan number 02: 10
Scan cycle for pos. ind.: 100
Scan number 03: 3
Scan cycle for op. ind.: 1000
Scan number 04: 1

Specifications for chatter dis

Analog interval in s:
Blockage time in s:
Number of test cycle
Number of block. cyc

Input	Connect designation	Monitored as feedback	Checkback monit. time in s	Command derivation	Indication derivation	Remote transmission FP: Master station	Name of telegram	Name of info element
1	8D4	Y	16.0			IEC 870-5-101	Meldungstelegramm DM	502
2	7D1	Y	16.0			IEC 870-5-101	Meldungstelegramm DM	502
3	7D2							
4	7D3							
5	7D4	Y	16.0			IEC 870-5-101	Meldungstelegramm DM	501
6	6D1	Y	16.0			IEC 870-5-101	Meldungstelegramm DM	501
7	6D3							
8	6D4							
9	5D1							
10	5D2							
11	5D3	N		Alarm 1 (Hupenbefehl)	KVIT 8TK			
13	8FA	N		Alarm 1 (Hupenbefehl)				
14	7F1	N		Alarm 1 (Hupenbefehl)				
15	7F2	N		Alarm 1 (Hupenbefehl)	KVIT 8TK			
16	7F3	N		Alarm 1 (Hupenbefehl)				
17	7F4	N		Alarm 1 (Hupenbefehl)				
18	6F1	N		Alarm 1 (Hupenbefehl)	KVIT 8TK			
19	6F3	N		Alarm 1 (Hupenbefehl)	KVIT 8TK			
20	6F4	N		Alarm 1 (Hupenbefehl)				
21	5F1	N		Alarm 1 (Hupenbefehl)				
22	5F2	N		Alarm 1 (Hupenbefehl)				
23	5F3	N		Alarm 1 (Hupenbefehl)				

Proprietary data, company confidential. All rights reserved.
Confia a tire de secret dentreprise. Tous droits reserve.
Comunicado como segredo empresarial. Reservados todos os direitos.
Confiado como secreto industrial. Nos reservamos todos los derechos.
The reproduction, transmission or use of this document or its is not permitted without express written authority.
Offenders will be liable for damages. All rights, including rights created by patent grant or registration of a utility model or design, are reserved

Documentation structur: Standard
Source file: KO050722.ODA

Rev.	Remarks	Date	Name	Norm	Date 22.07.2005	Drawn LANG	Appr.	Orig./Repl. 1/Repl. by

VSZ KOSICE

SIEMENS AG
ISATOOLS

Substation control system 6MB
Compact I/O unit:
Indications
Table

T = /BG 138
+
-S106
Page 138

Station: UW KOSICE
Device: K01 EAG
Device type: 6MB5220-1

Output	Connect designation	Section	Bay	Logical device	Lower limit	Value text		Column section	Column bay	Column logical device	Column information	Column value text	Type of command	Entry in event list	Entry in alarm list	Entry in SML	Display in diag. as select. field	Archive	Operational indications	SW termination time in s	Checkback monit. time in s	Interlocking type:	
1	3C1/3C2	T201	TERC	ODPOJOVAC Q9	SCHALTZUSTAND	8D4	vyp.	22	27	39	0	75	DC	O		N	PV	R	Y	0.6	16.0	SCHALTGERÄT	
2	3C3/3C4	T201	TERC	ODPOJOVAC Q9	SCHALTZUSTAND	8D4	zap.	22	27	39	0	75	DC	O		N	PV	R	Y	0.6	16.0	SCHALTGERÄT	
3	4C1/4C2																PV						
4	4C3/4C4																PV						
5	4D1/4D2	T201	TERC	ODPOJOVAC Q1	SCHALTZUSTAND	7D4	vyp.	22	27	39	0	75	DC	O		N	PV	R	Y	0.6	16.0	SCHALTGERÄT	
6	4D3/4D4	T201	TERC	ODPOJOVAC Q1	SCHALTZUSTAND	7D4	zap.	22	27	39	0	75	DC	O		N	PV	R	Y	0.6	16.0	SCHALTGERÄT	
7	2D1/2D2	T201	TERC		KVITOVANIE	KON	ZAC	22	27	0	39	75	SC	O	N	N	PV	R	N	0.6		SCHALTGERÄT	
9	3E1/3E2																PV						
10	3E3/3E4																PV						
11	4E1/4E2																PV						
12	4E3/4E4																PV						
13	4F1/4F2																PV						
14	4F3/4F4																PV						
15	2F1/2F2	T201	TERC		DEBLOKACIA BLOKOVANIA	KON	ZAC	22	27	0	39	75	SC	R/C	N	N	PV	R/C	Y			SCHALTGERÄT	

Proprietary data, company confidential. All rights reserved
Confia a tríre da secret dentreprise. Tous droits rservs.
Comunicado como segredo empresarial. Reservados todos os direitos.
Confiado como secreto industrial. Nos reservamos todos los derechos.

The reproduction, transmission or use of this document or its contents is not permitted without expres written authority. Offenders will be liable for damages. All rights, including rights created by patent grant or registration of a utility model or design, are reserved

Documentation structur: Standard
Source file: KO050722.ODA

Date	22.07.2005	VSZ KOSICE	SIEMENS AG ISATOOLS	Substation control system 6MB	T = /BG 139
Drawn	LANG			Compact I/O unit:	+
Appr.				Commands	-S106 Page
Rc Remarks	Date	Name Norm	Orig./Repl. 1/Repl. by	Table	

Station: UW KOSICE
Device: K01 EAG
Device type: 6MB5220-1

Analog channel no.	Connect designation	Section	Bay	Logical device	Lower limit	Display value	Dimension	Zero suppression f. display in %	Text for display	Bay blockage	Thres val. for switchover in %	Process analog value in I/O uni	With live-zero monitoring	Display in diagram
1	STROM L2	T201	TERC	MESSWERTE STROM	PRUD L2	4000.00	A	1.0	PRUD L2	N	0.0	N	PV	Y
2	STROM L1	T201	TERC	MESSWERTE STROM	PRUD L1	4000.00	A	1.0	PRUD L1	N	0.0	N	PV	Y
3	STROM L3	T201	TERC	MESSWERTE STROM	PRUD L3	4000.00	A	1.0	PRUD L3	N	0.0	N	PV	Y
4	UL1-UL2	T201	TERC	MESSWERTE SPANNUNG	NAPATIE L1-L2	10.00	KV	10.0	NAPATIE L1-L2	N	0.0	N	PV	Y
5	UL1-UL3	T201	TERC	MESSWERTE SPANNUNG	NAPATIE L1-L3	10.00	KV	10.0	NAPATIE L1-L3	N	0.0	N	PV	Y
6	UL2-UL3	T201	TERC	MESSWERTE SPANNUNG	NAPATIE L2-L3	10.00	KV	10.0	NAPATIE L2-L3	N	0.0	N	PV	Y
7	W-LEISTUNG	T201	TERC		VYKON CINNY	69.28	MW	1.0	VYKON CINNY	N	0.0	N	PV	Y
8	B-LEISTUNG	T201	TERC		VYKON JALOVY	69.28	MVar	1.0	VYKON JALOVY	N	0.0	N	PV	Y

Proprietary data, company confidential. All rights reserved.
Confie a tire da secret d'entreprise. Tous droits reservs.
Comunicado como segredo empresarial. Reservados todos os direitos.
Confiado como secreto industrial. Nos reservamos todos los derechos.
The reproduction, transmission or use of this document or its is not permitted without express written authority.
Offenders will be liable for damages. All rights, including rights created by patent grant or registration of a utility model or design, are reserved

Documentation structur: Standard
Source file: KO050722.ODA

Rev.	Remarks	Date	Name	Date	22.07.2005	VSZ KOSICE	SIEMENS AG ISA TOOLS	Substation control system 6MB
				Drawn	LANG			Compact I/O unit:
				Appr.				Analog values
				Norm		Orig./Repl. 1/Repl. by		Table

T = /BG 140
+
-S106
Page 140

Station: UW KOSICE
Device: K01 EAG
Device type: 6MB5220-1

Analog channel no.	Connect designation	Archive	Analog recording	Recording mode	No. of val. to be averaged	Scan interval in s	Analog value type	Max. value of analog value	Keep non-return pointer	Calculated demand value	Derive percentage value	Derive metered value	Static limit monitoring: Filtering time in s	Lower limit 1	Indication at lower limit 1	Lower limit 2	Indication at lower limit 2	Upper limit 1	Indication at higher limit 1	Upper limit 2	Indication at higher limit 2
1	STROM L2	Y	PERM	Analog value direct		900	CUR	4800.00	PV	PV	PV	PV	0					4799.00	PRUD L2 HH1		
2	STROM L1	Y	PERM	Analog value direct		900	CUR	4800.00	PV	PV	PV	PV	0					4799.00	PRUD L1 HH1		
3	STROM L3	Y	PERM	Analog value direct		900	CUR	4800.00	PV	PV	PV	PV	0					4799.00	PRUD L3 HH1		
4	UL1-UL2	Y	PERM	Analog value direct		900	PPV	12.00	PV	PV	PV	PV	0	9.00	NAPATIE L1-L2 DH1			11.00	NAPATIE L1-L2 HH1		
5	UL1-UL3	Y	PERM	Analog value direct		900	PPV	12.00	PV	PV	PV	PV	0	9.00	NAPATIE L1-L3 DH1			11.00	NAPATIE L1-L3 HH1		
6	UL2-UL3	Y	PERM	Analog value direct		900	PPV	12.00	PV	PV	PV	PV	0	9.00	NAPATIE L2-L3 DH1			11.00	NAPATIE L2-L3 HH1		
7	W-LEISTUNG	Y	PERM	Analog value direct		900	AP	83.10	PV	PV	PV	PV									
8	B-LEISTUNG	Y	PERM	Analog value direct		900	RP	83.10	PV	PV	PV	PV									

Proprietary data, company confidential. All rights reserved.
Confie a titre de secret d'entreprise. Tous droits reservs.
Comunicado como segredo empresarial. Reservados todos os direitos.
Confiado como secreto industrial. Nos reservamos todos los derechos.
The reproduction, transmission or use of this document or its is not permitted without express written authority.
Offenders will be liable for damages. All rights, including rights created by patent grant or registration of a utility model or design, are reserved.

Documentation structur: Standard
Source file: KO050722.ODA

Rev	Remarks	Date	Name	Date	22.07.2005	VSZ KOSICE	SIEMENS AG ISA TOOLS	Substation control system 6MB Compact I/O unit: Analog values Table	T = /BG 141 + -S106	Page
				Drawn	LANG					
				Appr.						
				Norm		Orig./Repl. 1/Repl. by				

Station: UW KOSICE
Device: K01 EAG
Device type: 6MB5220-1

Analog channel no.	Connect designation	Teletrans. FP raw val. Master station	Name of telegram	Name of info element
1	STROM L2	IEC 870-5-101	Meßwerttelegramm	901
2	STROM L1	IEC 870-5-101	Meßwerttelegramm	900
3	STROM L3	IEC 870-5-101	Meßwerttelegramm	902
4	UL1-UL2	IEC 870-5-101	Meßwerttelegramm	903
5	UL1-UL3	IEC 870-5-101	Meßwerttelegramm	904
6	UL2-UL3	IEC 870-5-101	Meßwerttelegramm	905
7	W-LEISTUNG	IEC 870-5-101	Meßwerttelegramm	906
8	B-LEISTUNG	IEC 870-5-101	Meßwerttelegramm	907

Proprietary data, company confidential. All rights reserved.
Confie a titre de secret d'entreprise. Tous droits reservés.
Comunicado como segredo empresarial. Reservados todos os direitos.
Confiado como secreto industrial. Nos reservamos todos los derechos.
The reproduction, transmission or use of this document or its is not permitted without expres written authority.
Offenders will be liable for damages. All rights, including rights created by patent grant or registration of a utility model or design, are reserved

Documentation structur: Standard
Source file: KO050722.ODA

Rev.	Remarks	Date	Name	Date	22.07.2005	VSZ KOSICE	SIEMENS AG SAOOLS	Substation control system 6MB Compact I/O unit: Analog values Table	T = /BG 142 + -S106	Page 142
				Drawn	LANG					
				Appr.						
				Norm		Orig./Repl. 1/Repl. by				

Proprietary data, company confidential. All rights reserved
Confie a ltre de secret dentreprise. Tous droits reserva.
Comunicado como segredo empresarial. Reservados todos os direitos
Confiado como secreto industrial. Nos reservamos todos los derechos.

The reproduction, transmission or use of this document or its contents is not permitted without expres written authority. Offenders will be liable for damages. All rights, including rights created by patent grant or registration of a utility model or design, are reserved

Documentation structur: Standard
Source file: KO050722.ODA

Station: UW KOSICE
Device: K02 EAG
Device type: 6MB5220-1
Packet numbe 8
Version no.: 1

Connection:
Device: LZG
Subrack: LZG-BGT
Module: AST 2
UART: 2
MUX: 11

General definitions:

Rated auxiliary voltage:	60 V, 110 V, 125 V DC
LZG monitoring:	Indication
Ext. met. value tr. comm.:	No
LIVE contact:	No
Buffer type:	I/O unit normal
Timeout monitoring:	Yes

Scan cycle for ind. input:

Scan cycle for fault ind.:	10
Scan number 02:	10
Scan cycle for pos. ind.:	100
Scan number 03:	3
Scan cycle for op. ind.:	1000
Scan number 04:	1

Specifications for chatter dis

Analog interval in s:
Blockage time in s:
Number of test cycle
Number of block. cyc

Input	Connect designation	Section	Bay	Logical device	Lower limit	Value text	Column section	Column bay	Column logical device	Column information	Column value text	With command	Indication type	Entry in event list	Entry in alarm list	Acknowledge	Display in indication area	Indication class	Entry in SML	Display in diagram	Display of intermed. pos.	Acknowledge	Display under voltage level	Indication class	Archive	Operational indications	Protection indications	Filt. of raised & cleared	Filtering of intermed. pos.	Bay blockage
1	8D4	T202	TERC	ODPOJOVAC Q9	SCHALTZUSTAND	vyp.	22	27	39	0	75	LZM	DI	O					N	Y	N	O	Y	2	R	Y	N		N	N
2	7D1	T202	TERC	ODPOJOVAC Q9	SCHALTZUSTAND	zap.	22	27	39	0	75	LZM	DI	O					N	Y	N	O	Y	2	R	Y	N		N	N
3	7D2																													
4	7D3																													
5	7D4	T202	TERC	ODPOJOVAC Q1	SCHALTZUSTAND	vyp.	22	27	39	0	75	LZM	DI	O					N	Y	N	O	Y	2	R	Y	N		N	N
6	6D1	T202	TERC	ODPOJOVAC Q1	SCHALTZUSTAND	zap.	22	27	39	0	75	LZM	DI	O					N	Y	N	O	Y	2	R	Y	N		N	N
7	6D3	T60	KA08	KOBKA	SCHALTZUSTAND	vyp.	22	27	39	0	75	PV	DI	O					N	Y		O	Y	2	R	Y	N		N	N
8	6D4	T60	KA08	KOBKA	SCHALTZUSTAND	zap.	22	27	39	0	75	PV	DI	O					N	Y		O	Y	2	R	Y	N		N	N
9	5D1																													
10	5D2																													
11	5D3	T202	TERC		8TK PORUCHA	KON ZAC	22	27	0	39	75	PV	SI	R/C	Y	R/C	Y	1	N	N					R/C	Y	N	N		N
13	8FA	R10	KAB		STRATA OVL.NAP.OCHRANY.	KON ZAC	22	27	0	39	75	PV	SI	R/C	Y	R/C	Y	1	N	N					R/C	N	Y	N		N
14	7F1	T202	TERC		VYP ISTICA PREVODNIKOV	KON ZAC	22	27	0	39	75	PV	SI	R/C	Y	R/C	Y	1	N	N					R/C	N	Y	N		N
15	7F2	T202	TERC		VYPN.VYPINAC.BEZ POVELU	KON ZAC	22	27	0	39	75	PV	TR	O	Y	O	Y	1	N	N					R	Y	N			N
16	7F3	T202	TERC		PREVADZKA S1	KON ZAC	22	27	0	39	75	PV	SI	R/C	Y	R/C	Y	1	N	Y		N	N		R/C	Y	N	N		N
17	7F4	T202	TERC		S5 POLOHA VYPN./MIESTNE	KON ZAC	22	27	0	39	75	PV	SI	R/C	Y	R/C	Y	1	N	Y		N	N		R/C	Y	N	N		N
18	6F1	T202	TERC		CHYBA OBSLUHY	KON ZAC	22	27	0	39	75	PV	SI	R/C	N				N	N					R/C	Y	N	N		N
19	6F3	T202	TERC		PREKROCENIE CASU BEHU	KON ZAC	22	27	0	39	75	PV	SI	R/C	N				N	N					R/C	Y	N	N		N
20	6F4	T202	TERC		PORUCHA VYPINACA	KON ZAC	22	27	0	39	75	PV	SI	R/C	Y	R/C	Y	1	N	N					R/C	N	Y	N		N
21	5F1	T202	TERC		STRATA OVL. NAPATIA	KON ZAC	22	27	0	39	75	PV	SI	R/C	Y	R/C	Y	1	N	N					R/C	N	Y	N		N
22	5F2	T202	TERC		VYPN. ISTICA 100V,50Hz	KON ZAC	22	27	0	39	75	PV	SI	R/C	Y	R/C	Y	1	N	N					R/C	N	Y	N		N
23	5F3	T202	TERC		ZEMNE SPOJENIE	KON ZAC	22	27	0	39	75	PV	SI	R/C	Y	R/C	Y	1	N	N					R/C	N	Y	N		N

Station: UW KOSICE
Device: K02 EAG
Device type: 6MB5220-1
Packet numbe 8
Version no.: 1

Connection:
Device: LZG
Subrack: LZG-BGT
Module: AST 2
UART: 2
MUX: 11

General definitions:
Rated auxiliary voltage: 60 V, 110 V, 125 V DC
LZG monitoring: Indication
Ext. met. value tr. comm.: No
LIVE contact: No
Buffer type: I/O unit normal
Timeout monitoring: Yes

Scan cycle for ind. input:
Scan cycle for fault ind.: 10
Scan number 02: 10
Scan cycle for pos. ind.: 100
Scan number 03: 3
Scan cycle for op. ind.: 1000
Scan number 04: 1

Specifications for chatter dis
Analog interval in s:
Blockage time in s:
Number of test cycle
Number of block. cyc

Input	Connect designation	Monitored as feedback	Checkback monit. time in s	Command derivation	Indication derivation	Remote transmission FP: Master station	Name of telegram	Name of info element
1	8D4	Y	16.0			IEC 870-5-101	Meldungstelegramm DM	512
2	7D1	Y	16.0			IEC 870-5-101	Meldungstelegramm DM	512
3	7D2							
4	7D3							
5	7D4	Y	16.0			IEC 870-5-101	Meldungstelegramm DM	511
6	6D1	Y	16.0			IEC 870-5-101	Meldungstelegramm DM	511
7	6D3	N				IEC 870-5-101	Meldungstelegramm DM	515
8	6D4	N				IEC 870-5-101	Meldungstelegramm DM	515
9	5D1							
10	5D2							
11	5D3	N		Alarm 1 (Hupenbefehl)	KVIT 8TK			
13	8FA	N		Alarm 1 (Hupenbefehl)				
14	7F1	N		Alarm 1 (Hupenbefehl)				
15	7F2	N		Alarm 1 (Hupenbefehl)	KVIT 8TK			
16	7F3	N		Alarm 1 (Hupenbefehl)				
17	7F4	N		Alarm 1 (Hupenbefehl)				
18	6F1	N		Alarm 1 (Hupenbefehl)	KVIT 8TK			
19	6F3	N		Alarm 1 (Hupenbefehl)	KVIT 8TK			
20	6F4	N		Alarm 1 (Hupenbefehl)				
21	5F1	N		Alarm 1 (Hupenbefehl)				
22	5F2	N		Alarm 1 (Hupenbefehl)				
23	5F3	N		Alarm 1 (Hupenbefehl)				

Proprietary data, company confidential. All rights reserved.
Confie a titre de secret d'entreprise. Tous droits r,serv,s.
Comunicado como segredo empresarial. Reservados todos os direitos.
Confiado como secreto industrial. Nos reservamos todos los derechos.
The reproduction, transmission or use of this document or its is not permitted without expres written authority.
Offenders will be liable for damages. All rights, including rights created by patent grant or registration of a utility model or design, are reserved

Documentation structur: Standard
Source file: KO050722.ODA

Rev.	Remarks	Date	Name	Date	22.07.2005	VSZ KOSICE	SIEMENS AG ISA TOOLS	Substation control system 6MB
				Drawn	LANG			Compact I/O unit:
				Appr.				Indications
				Norm		Orig./Repl. 1/Repl. by		Table

T = /BG 144
+
-S106

Station: UW KOSICE
Device: K02 EAG
Device type: 6MB5220-1

Output	Connect designation	Section	Bay	Logical device	Lower limit	Value text	Column section	Column bay	Column logical device	Column information	Column value text	Type of command	Entry in event list	Entry in alarm list	Entry in SML	Display in diag. as select. field	Archive	Operational indications	SW termination time in s	Checkback monit. time in s	Interlocking type:
1	3C1/3C2	T202	TERC	ODPOJOVAC Q9	SCHALTZUSTAND	8D4 vyp.	22	27	39	0	75	DC	O		N	PV	R	Y	0.6	16.0	SCHALTGERÄT
2	3C3/3C4	T202	TERC	ODPOJOVAC Q9	SCHALTZUSTAND	8D4 zap.	22	27	39	0	75	DC	O		N	PV	R	Y	0.6	16.0	SCHALTGERÄT
3	4C1/4C2															PV					
4	4C3/4C4															PV					
5	4D1/4D2	T202	TERC	ODPOJOVAC Q1	SCHALTZUSTAND	7D4 vyp.	22	27	39	0	75	DC	O		N	PV	R	Y	0.6	16.0	SCHALTGERÄT
6	4D3/4D4	T202	TERC	ODPOJOVAC Q1	SCHALTZUSTAND	7D4 zap.	22	27	39	0	75	DC	O		N	PV	R	Y	0.6	16.0	SCHALTGERÄT
7	2D1/2D2	T202	TERC		KVITOVANIE	KON ZAC	22	27	0	39	75	SC	O	N	N	PV	R	N	0.6		SCHALTGERÄT
9	3E1/3E2															PV					
10	3E3/3E4															PV					
11	4E1/4E2															PV					
12	4E3/4E4															PV					
13	4F1/4F2															PV					
14	4F3/4F4															PV					
15	2F1/2F2	T202	TERC		DEBLOKACIA BLOKOVANIA	KON ZAC	22	27	0	39	75	SC	R/C	N	N	PV	R/C	Y			SCHALTGERÄT

Proprietary data, company confidential. All rights reserved.
Confie a titre de secret d'entreprise. Tous droits reservés.
Comunicado como segredo empresarial. Reservados todos os direitos.
Confiado como secreto industrial. Nos reservamos todos los derechos.
The reproduction, transmission or use of this document or its is not permitted without express written authority.
Offenders will be liable for damages. All rights, including rights created by patent grant or registration of a utility model or design, are reserved

Documentation structur: Standard
Source file: KO050722.ODA

Rc	Remarks	Date	Name	Date	22.07.2005	VSZ KOSICE	SIEMENS AG ISA TOOLS	Substation control system 6MB Compact I/O unit: Commands Table	T = /BG 145 + -S106 Page
				Drawn	LANG				
				Appr.					
				Norm		Orig./Repl. 1/Repl. by			

Station: UW KOSICE
Device: K02 EAG
Device type: 6MB5220-1

Analog channel no.	Connect designation	Section	Bay	Logical device	Lower limit	Display value	Dimension	Zero suppression f. display in %	Text for display	Bay blockage	Thres val. for switchover in %	Process analog value in I/O uni	With live-zero monitoring	Display in diagram
1	STROM L2	T202	TERC	MESSWERTE STROM	PRUD L2	4000.00	A	1.0	PRUD L2	N	0.0	N	PV	Y
2	STROM L1	T202	TERC	MESSWERTE STROM	PRUD L1	4000.00	A	1.0	PRUD L1	N	0.0	N	PV	Y
3	STROM L3	T202	TERC	MESSWERTE STROM	PRUD L3	4000.00	A	1.0	PRUD L3	N	0.0	N	PV	Y
4	UL1-UL2	T202	TERC	MESSWERTE SPANNUNG	NAPATIE L1-L2	10.00	KV	10.0	NAPATIE L1-L2	N	0.0	N	PV	Y
5	UL1-UL3	T202	TERC	MESSWERTE SPANNUNG	NAPATIE L1-L3	10.00	KV	10.0	NAPATIE L1-L3	N	0.0	N	PV	Y
6	UL2-UL3	T202	TERC	MESSWERTE SPANNUNG	NAPATIE L2-L3	10.00	KV	10.0	NAPATIE L2-L3	N	0.0	N	PV	Y
7	W-LEISTUNG	T202	TERC		VYKON CINNY	69.28	MW	1.0	VYKON CINNY	N	0.0	N	PV	Y
8	B-LEISTUNG	T202	TERC		VYKON JALOVY	69.28	MVar	1.0	VYKON JALOVY	N	0.0	N	PV	Y

Proprietary data, company confidential. All rights reserved.
Confie a titre de secret d'entreprise. Tous droits réservés.
Comunicado como segredo empresarial. Reservados todos os direitos.
Confiado como secreto industrial. Nos reservamos todos los derechos.

The reproduction, transmission or use of this document or its is not permitted without express written authority. Offenders will be liable for damages. All rights, including rights created by patent grant or registration of a utility model or design, are reserved

Documentation structur: Standard
Source file: KO050722.ODA

Rev.	Remarks	Date	Name	Date	22.07.2005	VSZ KOSICE	SIEMENS AG SAOOLS	Substation control system 6MB
				Drawn	LANG			Compact I/O unit:
				Appr.				Analog values
				Norm		Orig./Repl. 1/Repl. by		Table

T = /BG 146
+
-S106
Page 146

Station: UW KOSICE
Device: K02 EAG
Device type: 6MB5220-1

Analog channel no.	Connect designation	Archive	Analog recording	Recording mode	No. of val. to be averaged	Scan interval in s	Analog value type	Max. value of analog value	Keep non-return pointer	Calculated demand value	Derive percentage value	Derive metered value	Static limit monitoring: Filtering time in s	Lower limit 1	Indication at lower limit 1	Lower limit 2	Indication at lower limit 2	Upper limit 1	Indication at higher limit 1	Upper limit 2	Indication at higher limit 2
1	STROM L2	Y	PERM	Analog value direct		900	CUR	4800.00	PV	PV	PV	PV	0					4799.00	PRUD L2 HH1		
2	STROM L1	Y	PERM	Analog value direct		900	CUR	4800.00	PV	PV	PV	PV	0					4799.00	PRUD L1 HH1		
3	STROM L3	Y	PERM	Analog value direct		900	CUR	4800.00	PV	PV	PV	PV	0					4799.00	PRUD L3 HH1		
4	UL1-UL2	Y	PERM	Analog value direct		900	PPV	12.00	PV	PV	PV	PV	0	9.00	NAPATIE L1-L2 DH1			11.00	NAPATIE L1-L2 HH1		
5	UL1-UL3	Y	PERM	Analog value direct		900	PPV	12.00	PV	PV	PV	PV	0	9.00	NAPATIE L1-L3 DH1			11.00	NAPATIE L1-L3 HH1		
6	UL2-UL3	Y	PERM	Analog value direct		900	PPV	12.00	PV	PV	PV	PV	0	9.00	NAPATIE L2-L3 DH1			11.00	NAPATIE L2-L3 HH1		
7	W-LEISTUNG	Y	PERM	Analog value direct		900	AP	83.10	PV	PV	PV	PV									
8	B-LEISTUNG	Y	PERM	Analog value direct		900	RP	83.10	PV	PV	PV	PV									

Proprietary data, company confidential. All rights reserved.
Confia a titre de secret d'entreprise. Tous droits réservés.
Comunicado como segredo empresarial. Reservados todos os direitos.
Confiado como secreto industrial. Nos reservamos todos los derechos.
The reproduction, transmission or use of this document or its is not permitted without expres written authority.
Offenders will be liable for damages. All rights, including rights created by patent grant or registration of a utility model or design, are reserved

Documentation structur: Standard
Source file: KO050722.ODA

Rev	Remarks	Date	Name	Date	22.07.2005	VSZ KOSICE	SIEMENS AG ISAIOOLS	Substation control system 6MB	T = /BG 147
				Drawn	LANG			Compact I/O unit:	+
				Appr.				Analog values	-S106
				Norm		Orig./Repl. 1/Repl. by		Table	Page

Station: UW KOSICE
Device: K02 EAG
Device type: 6MB5220-1

Analog channel no.	Connect designation	Teletrans. FP raw val. Master station	Name of telegram	Name of info element
1	STROM L2	IEC 870-5-101	Meßwerttelegramm	911
2	STROM L1	IEC 870-5-101	Meßwerttelegramm	910
3	STROM L3	IEC 870-5-101	Meßwerttelegramm	912
4	UL1-UL2	IEC 870-5-101	Meßwerttelegramm	913
5	UL1-UL3	IEC 870-5-101	Meßwerttelegramm	914
6	UL2-UL3	IEC 870-5-101	Meßwerttelegramm	915
7	W-LEISTUNG	IEC 870-5-101	Meßwerttelegramm	916
8	B-LEISTUNG	IEC 870-5-101	Meßwerttelegramm	917

Proprietary data, company confidential. All rights reserved.
Confie a titre de secret d'entreprise. Tous droits reserv.s.
Comunicado como segredo empresarial. Reservados todos os direitos.
Confiado como secreto industrial. Nos reservamos todos los derechos.

The reproduction, transmission or use of this document or its is not permitted without expres written authority.
Offenders will be liable for damages. All rights, including rights created by patent grant or registration of a utility model or design, are reserved

Documentation structur: Standard
Source file: KO050722.ODA

Rev.	Remarks	Date	Name	Date	22.07.2005	VSZ KOSICE	SIEMENS AG ISA TOOLS	Substation control system 6MB Compact I/O unit: Analog values Table	T = /BG 148 + -S106	Page 148
				Drawn	LANG					
				Appr.						
				Norm		Orig./Repl. 1/Repl. by				

Line number	Station	Section	Bay	Logical device	Lower limit	Value text	Source of analog value: Section	Bay	Logical device	Lower limit	Freeze interval = reset interval	Freeze with sequence no.	Diagram Dimension	Metered value factor	Transfer with reset	Status topical after freeze	Transfer interval	Analog value field	Selection field	Keep non-return pointer	Entry in event list
1	UW KOSICE	R110	EA04		CINNY VYKON P Abgel.		R110	EA04		VYKON CINNY	Y	Y	KW	3.33	N	Y	Umspeichern Zählwert	PV	PV	PV	N
2	UW KOSICE	R110	EA11		CINNY VYKON P Abgel.		R110	EA11		VYKON CINNY	Y	Y	KW	3.33	N	Y	Umspeichern Zählwert	PV	PV	PV	N
3	UW KOSICE	R110	EA13		CINNY VYKON P Abgel.		R110	EA13		VYKON CINNY	Y	Y	KW	3.33	N	Y	Umspeichern Zählwert	PV	PV	PV	N

Proprietary data, company confidential. All rights reserved.
Confie a titre de secret d'entreprise. Tous droits r,serv,s.
Comunicado como segredo empresarial. Reservados todos os direitos.
Confiado como secreto industrial. Nos reservamos todos los derechos.

The reproduction, transmission or use of this document or its is not permitted without express written authority.
Offenders will be liable for damages. All rights, including rights created by patent grant or registration of a utility model or design, are reserved

Documentation structur: Standard
Source file: KO050722.ODA

			Date	22.07.2005	VSZ KOSICE	SIEMENS AG ISA TOOLS	Substation control system 6MB Derived metered values	T =	/BM 1
			Drawn	LANG				+	
			Appr.					-S111	Page
Rc	Remarks	Date	Name	Norm	Orig./Repl. 1/Repl. by		Table		

Line number	Remote LK	FP/SC	Transfer with reset	Status topical after freeze	Transfer interval
1	N	N	N	Y	Umspeichern Zählwert
2	N	N			
3	N	N	N	Y	Umspeichern Zählwert

Proprietary data, company confidential. All rights reserved.
Confie a titre de secret d'entreprise. Tous droits reservs.
Comunicado como segredo empresarial. Reservados todos os direitos.
Confiado como secreto industrial. Nos reservamos todos los derechos.

The reproduction, transmission or use of this document or its
is not permitted without expres written authority.
Offenders will be liable for damages. All rights, including rights
created by patent grant or registration of a utility model or design, are reserved

Documentation structur: Standard
Source file: KO050722.ODA

Rev.	Remarks	Date	Name	Date	22.07.2005
				Drawn	LANG
				Appr.	
				Norm	

VSZ
KOSICE

Orig./Repl. 1/Repl. by

SIEMENS AG
ISA TOOLS

Substation control system 6MB
Derived metered values

Table

T = /BM 2
+

-S111

Proprietary data, company confidential. All rights reserved.
Confia a Ltda d.s secret d.r reprfia. Tus d.r s.r s.v.s.
Comunicado como secreto empresarial. Reservados todos os direitos.
Comunicado como secreto industrial. Nos reservamos todos los derechos.
The reproduction, transmission or use of this document or its contents is not permitted without express written authority. Offenders will be liable for damages. All rights, including rights created by patent grant or registration of a utility model or design, are reserved.

Line number	Station	Section	Bay	Logical device	Lower limit	Value text	Column section	Column bay	Column logical device	Column information	Column value text	Indication type	Anzeige im Bild des 6MB524	Entry in event list	Entry in SML	Entry in alarm list	Acknowledge	Display in indication area	Indication class	Archive	Operational indications	Protection indications	Display in diagram	Acknowledge	Display under voltage level	Indication class
1	UW KOSICE	ALLGEMEIN			TLAC OBNOV	KON ZAC	0	0	0	39	75	SI	PV	R/C	N	N				R/C	Y	N	N			
2	UW KOSICE	R110	EA01		FELDMERKER FUER GAENDE							SI	PV	N	N	N				N			Y	N	N	
3	UW KOSICE	R110	EA01		KVIT 8TK	KON ZAC	0	22	0	39	75	SI	PV	N	N	N				N			Y	O	Y	2
4	UW KOSICE	R110	EA01/3		FELDMERKER FUER GAENDE							SI	PV	N	N	N				N			Y	N	N	
5	UW KOSICE	R110	EA02		FELDMERKER FUER GAENDE							SI	PV	N	N	N				N			Y	N	N	
6	UW KOSICE	R110	EA02		KVIT 8TK	KON ZAC	0	22	0	39	75	SI	PV	N	N	N				N			Y	O	Y	2
7	UW KOSICE	R110	EA03		FELDMERKER FUER GAENDE							SI	PV	N	N	N				N			Y	N	N	
8	UW KOSICE	R110	EA03		KVIT 8TK	KON ZAC	0	22	0	39	75	SI	PV	N	N	N				N			Y	O	Y	2
9	UW KOSICE	R110	EA03		ROZPOJENIE OCHRNAMI	KON ZAC	22	27	0	39	75	SI	PV	R/C	N	Y	R/C	Y	1	R/C	N	Y	N			
10	UW KOSICE	R110	EA04		FELDMERKER FUER GAENDE							SI	PV	N	N	N				N			Y	N	N	
11	UW KOSICE	R110	EA04		KVIT 8TK	KON ZAC	0	22	0	39	75	SI	PV	N	N	N				N			Y	O	Y	2
12	UW KOSICE	R110	EA05		FELDMERKER FUER GAENDE							SI	PV	N	N	N				N			Y	N	N	
13	UW KOSICE	R110	EA05		KVIT 8TK	KON ZAC	0	22	0	39	75	SI	PV	N	N	N				N			Y	O	Y	2
14	UW KOSICE	R110	EA05		ROZPOJENIE OCHRNAMI							SI	PV	N	N	N				N			N			
15	UW KOSICE	R110	EA05		Stop 7VK512 Bedienb.	KON ZAC	22	27	0	39	75	TR	PV	N	N	N				N			N			
16	UW KOSICE	R110	EA06		FELDMERKER FUER GAENDE							SI	PV	N	N	N				N			Y	N	N	
17	UW KOSICE	R110	EA06		KVIT 8TK	KON ZAC	0	22	0	39	75	SI	PV	N	N	N				N			Y	O	Y	2
18	UW KOSICE	R110	EA07		FELDMERKER FUER GAENDE							SI	PV	N	N	N				N			Y	N	N	
19	UW KOSICE	R110	EA07		KVIT 8TK	KON ZAC	0	22	0	39	75	SI	PV	N	N	N				N			Y	O	Y	2
20	UW KOSICE	R110	EA07		ROZPOJENIE OCHRNAMI	KON ZAC	22	27	0	39	75	SI	PV	R/C	N	Y	R/C	Y	1	R/C	N	Y	N			
21	UW KOSICE	R110	EA08		FELDMERKER FUER GAENDE							SI	PV	N	N	N				N			Y	N	N	
22	UW KOSICE	R110	EA08		KVIT 8TK	KON ZAC	0	22	0	39	75	SI	PV	N	N	N				N			Y	O	Y	2
23	UW KOSICE	R110	EA09		FELDMERKER FUER GAENDE							SI	PV	N	N	N				N			Y	N	N	
24	UW KOSICE	R110	EA09		KVIT 8TK	KON ZAC	0	22	0	39	75	SI	PV	N	N	N				N			Y	O	Y	2
25	UW KOSICE	R110	EA10		FELDMERKER FUER GAENDE							SI	PV	N	N	N				N			Y	N	N	
26	UW KOSICE	R110	EA10		KVIT 8TK	KON ZAC	0	22	0	39	75	SI	PV	N	N	N				N			Y	O	Y	2
27	UW KOSICE	R110	EA10		OCHRANA NADOBY VYPNUTY	KON ZAC	22	27	0	39	75	SI	PV	R/C	N	Y	R/C	Y	1	R/C	N	Y	N			
28	UW KOSICE	R110	EA11		FELDMERKER FUER GAENDE							SI	PV	N	N	N				N			Y	N	N	
29	UW KOSICE	R110	EA11		KVIT 8TK	KON ZAC	0	22	0	39	75	SI	PV	N	N	N				N			Y	O	Y	2
30	UW KOSICE	R110	EA12		FELDMERKER FUER GAENDE							SI	PV	N	N	N				N			Y	N	N	
31	UW KOSICE	R110	EA12		KVIT 8TK	KON ZAC	0	22	0	39	75	SI	PV	N	N	N				N			Y	O	Y	2
32	UW KOSICE	R110	EA12		OCHRANA NADOBY VYPNUTY	KON ZAC	22	27	0	39	75	SI	PV	R/C	N	Y	R/C	Y	1	R/C	N	Y	N			

Documentation structure: Standard
Source file: KO050722.ODA

Date	22.07.2005	VSZ KOSICE	SIEMENS AG ISAIOOLS	Substation control system 6MB
Drawn	LANG			Internally generated indications
Appr.				
Norm		Orig./Repl. 1/Repl. by		Table

Remarks | Date | Name

T = /BM 3
+
-S111
Page

Line number	Command derivation	Indication derivation	Tele-ctrl LK	Tele-ctrl FP/SC
1			N	N
2			N	N
3		KVIT 8TK	N	N
4			N	N
5			N	N
6		KVIT 8TK	N	N
7			N	N
8		KVIT 8TK	N	N
9	Alarm 1 (Hupenbefehl)		N	N
10			N	N
11		KVIT 8TK	N	N
12			N	N
13		KVIT 8TK	N	N
14			N	N
15	Stop 7VK		N	N
16			N	N
17		KVIT 8TK	N	N
18			N	N
19		KVIT 8TK	N	N
20	Alarm 1 (Hupenbefehl)		N	N
21			N	N
22		KVIT 8TK	N	N
23			N	N
24		KVIT 8TK	N	N
25			N	N
26		KVIT 8TK	N	N
27	Alarm 1 (Hupenbefehl)		N	N
28			N	N
29		KVIT 8TK	N	N
30			N	N
31		KVIT 8TK	N	N
32	Alarm 1 (Hupenbefehl)		N	N

Proprietary data, company confidential. All rights reserved.
Confie a titre de secret d'entreprise. Tous droits réservés.
Comunicado como segredo empresarial. Reservados todos os direitos.
Confiado como secreto industrial. Nos reservamos todos los derechos.

The reproduction, transmission or use of this document or its is not permitted without expres written authority.
Offenders will be liable for damages. All rights, including rights created by patent grant or registration of a utility model or design, are reserved.

Documentation structur: Standard
Source file: KO050722.ODA

Rev.	Remarks	Date	Name	Date	22.07.2005
				Drawn	LANG
				Appr.	
				Norm	

VSZ
KOSICE

Orig./Repl. 1/Repl. by

SIEMENS AG
ISA TOOLS

Substation control system 6MB
Internally generated indications

Table

T = /BM 4
+

-S111

Proprietary data, company confidential. All rights reserved.
Confiaa a tire de secret d'entreprise. Tous droits reservs.
Comunicado como segredo empresarial. Reservados todos os direitos.
Confiado como secreto industrial. Nos reservamos todos los derechos.

The reproduction, transmission or use of this document or its contents is not permitted without express written authority. Offenders will be liable for damages. All rights, including rights created by patent grant or registration of a utility model or design, are reserved.

Line number	Station	Section	Bay	Logical device	Lower limit	Value text	Column section	Column bay	Column logical device	Column information	Column value text	Indication type	Anzeige im Bild des 6MB524	Entry in event list	Entry in SML	Entry in alarm list	Acknowledge	Display in indication area	Indication class	Archive	Operational indications	Protection indications	Display in diagram	Acknowledge	Display under voltage level	Indication class
33	UW KOSICE	R110	EA13		FELDMERKER FUER GAENDE							SI	PV	N	N	N				N			Y	N	N	
34	UW KOSICE	R110	EA13		KVIT 8TK	KON ZAC	0	22	0	39	75	SI	PV	N	N	N				N			Y	O	Y	2
35	UW KOSICE	R110	EA13		ROZPOJENIE OCHRNAMI	KON ZAC	22	27	0	39	75	SI	PV	R/C	N	Y	R/C	Y	1	R/C	N	Y	N			
36	UW KOSICE	R110	EA15		FELDMERKER FUER GAENDE							SI	PV	N	N	N				N			Y	N	N	
37	UW KOSICE	R110	EA15		KVIT 8TK	KON ZAC	0	22	0	39	75	SI	PV	N	N	N				N			Y	O	Y	2
38	UW KOSICE	R110	EA15		ROZPOJENIE OCHRNAMI	KON ZAC	22	27	0	39	75	SI	PV	R/C	N	Y	R/C	Y	1	R/C	N	Y	N			
39	UW KOSICE	R110	EA16		FELDMERKER FUER GAENDE							SI	PV	N	N	N				N			Y	N	N	
40	UW KOSICE	R110	EA16		KVIT 8TK	KON ZAC	0	22	0	39	75	SI	PV	N	N	N				N			Y	O	Y	2
41	UW KOSICE	R110	EA17		FELDMERKER FUER GAENDE							SI	PV	N	N	N				N			Y	N	N	
42	UW KOSICE	R110	EA17		KVIT 8TK	KON ZAC	0	22	0	39	75	SI	PV	N	N	N				N			Y	O	Y	2
43	UW KOSICE	R110	EA18		FELDMERKER FUER GAENDE							SI	PV	N	N	N				N			Y	N	N	
44	UW KOSICE	R110	EA18		KVIT 8TK	KON ZAC	0	22	0	39	75	SI	PV	N	N	N				N			Y	O	Y	2
45	UW KOSICE	R110	EA18		POSOBENIE PLAST.OCHR	KON ZAC	22	27	0	39	75	SI	PV	R/C	N	Y	R/C	Y	1	R/C	N	Y	N			
46	UW KOSICE	R110	EA19		FELDMERKER FUER GAENDE							SI	PV	N	N	N				N			Y	N	N	
47	UW KOSICE	R110	EA19		KVIT 8TK	KON ZAC	0	22	0	39	75	SI	PV	N	N	N				N			Y	O	Y	2
48	UW KOSICE	R110	EA19		POSOBENIE PLAST.OCHR	KON ZAC	22	27	0	39	75	SI	PV	R/C	N	Y	R/C	Y	1	R/C	N	Y	N			
49	UW KOSICE	R110	EA20		FELDMERKER FUER GAENDE							SI	PV	N	N	N				N			Y	N	N	
50	UW KOSICE	R110	EA20		KVIT 8TK	KON ZAC	0	22	0	39	75	SI	PV	N	N	N				N			Y	O	Y	2
51	UW KOSICE	R110	EA20		POSOBENIE PLAST.OCHR	KON ZAC	22	27	0	39	75	SI	PV	R/C	N	Y	R/C	Y	1	R/C	N	Y	N			
52	UW KOSICE	R110	EA21		FELDMERKER FUER GAENDE							SI	PV	N	N	N				N			Y	N	N	
53	UW KOSICE	R110	EA21		KVIT 8TK	KON ZAC	0	22	0	39	75	SI	PV	N	N	N				N			Y	O	Y	2
54	UW KOSICE	R110	EA23		FELDMERKER FUER GAENDE							SI	PV	N	N	N				N			Y	N	N	
55	UW KOSICE	R110	EA23		KVIT 8TK	KON ZAC	0	22	0	39	75	SI	PV	N	N	N				N			Y	O	Y	2
56	UW KOSICE	R220	DA01		KVIT 8TK	KON ZAC	0	22	0	39	75	SI	PV	N	N	N				N			Y	O	Y	2
57	UW KOSICE	R220	DA01		POSOBENI KOSTR.OCHR.	KON ZAC	22	27	0	39	75	SI	PV	R/C	N	Y	R/C	Y	1	R/C	N	Y	N			
58	UW KOSICE	R220	DA02		KVIT 8TK	KON ZAC	0	22	0	39	75	SI	PV	N	N	N				N			Y	O	Y	2
59	UW KOSICE	R220	DA02		POSOBENI KOSTR.OCHR.	KON ZAC	22	27	0	39	75	SI	PV	R/C	N	Y	R/C	Y	1	R/C	N	Y	N			
60	UW KOSICE	R220	T201		PORUCHA PARAL.REG.	KON ZAC	22	27	0	39	75	SI	PV	R/C	N	N				N			Y	N	N	
61	UW KOSICE	R220	T202		PORUCHA PARAL.REG.	KON ZAC	22	27	0	39	75	SI	PV	R/C	N	N				N			Y	N	N	
62	UW KOSICE	T10	LA1		BUCHHOLZ	KON ZAC	22	27	0	39	75	SI	PV	R/C	N	Y	R/C	Y	1	R/C	N	Y	N			
63	UW KOSICE	T201	TERC		FELDMERKER FUER GAENDE							SI	PV	N	N	N				N			Y	N	N	
64	UW KOSICE	T201	TERC		KVIT 8TK	KON ZAC	0	22	0	39	75	SI	PV	N	N	N				N			Y	O	Y	2

Documentation structur: Standard
Source file: KO050722.ODA

Date	22.07.2005	VSZ KOSICE	SIEMENS AG ISATOOLS
Drawn	LANG		
Appr.			
Remarks / Date / Name / Norm		Orig./Repl. 1/Repl. by	

Substation control system 6MB
Internally generated indications
Table

T = /BM 5
+
-S111
Page

Proprietary data, company confidential. All rights reserved
Confia a tire da secret d'entreprise. Tous droits reservs.
Comunicado como segredo empresarial. Reservados todos os direitos
Confiado como secreto industrial. Nos reservamos todos los derechos.

The reproduction, transmission or use of this document or its
is not permitted without expres written authority.
Offenders will be liable for damages. All rights, including rights
created by patent grant or registration of a utility model or design, are reserved

Documentation structur: Standard
Source file: KO050722.ODA

Line number	Command derivation	Indication derivation	Tele-ctrl LK	Tele-ctrl FP/SC
33			N	N
34		KVIT 8TK	N	N
35	Alarm 1 (Hupenbefehl)		N	N
36			N	N
37		KVIT 8TK	N	N
38	Alarm 1 (Hupenbefehl)		N	N
39			N	N
40		KVIT 8TK	N	N
41			N	N
42		KVIT 8TK	N	N
43			N	N
44		KVIT 8TK	N	N
45	Alarm 1 (Hupenbefehl)		N	N
46			N	N
47		KVIT 8TK	N	N
48	Alarm 1 (Hupenbefehl)		N	N
49			N	N
50		KVIT 8TK	N	N
51	Alarm 1 (Hupenbefehl)		N	N
52			N	N
53		KVIT 8TK	N	N
54			N	N
55		KVIT 8TK	N	N
56		KVIT 8TK	N	N
57	Alarm 1 (Hupenbefehl)		N	N
58		KVIT 8TK	N	N
59	Alarm 1 (Hupenbefehl)		N	N
60			N	N
61			N	N
62	Alarm 1 (Hupenbefehl)		N	N
63			N	N
64		KVIT 8TK	N	N

Line number	Station	Section	Bay	Logical device	Lower limit	Value text	Column section	Column bay	Column logical device	Column information	Column value text	Indication type	Anzeige im Bild des 6MB524	Entry in event list	Entry in SML	Entry in alarm list	Acknowledge	Display in indication area	Indication class	Archive	Operational indications	Protection indications	Display in diagram	Acknowledge	Display under voltage level	Indication class
65	UW KOSICE	T202	TERC		FELDMERKER FUER GAENDE							SI	PV	N	N	N				N			Y	N	N	
66	UW KOSICE	T202	TERC		KVIT 8TK	KON ZAC	0	22	0	39	75	SI	PV	N	N	N				N			Y	O	Y	2
67	UW KOSICE	T30	LA6		BUCHHOLZ	KON ZAC	22	27	0	39	75	SI	PV	R/C	N	Y	R/C	Y	1	R/C	N	Y	N			
68	UW KOSICE	T60	LA109		NADPR.OCHR.POSOBENIE	KON ZAC	22	27	0	39	75	SI	PV	R/C	N	Y	R/C	Y	1	R/C	N	Y	N			
69	UW KOSICE	T60	LA203		NADPR.OCHR.POSOBENIE	KON ZAC	22	27	0	39	75	SI	PV	R/C	N	Y	R/C	Y	1	R/C	N	Y	N			
70	UW KOSICE	T60	LA309		NADPR.OCHR.POSOBENIE	KON ZAC	22	27	0	39	75	SI	PV	R/C	N	Y	R/C	Y	1	R/C	N	Y	N			
71	UW KOSICE	T60	LA403		NADPR.OCHR.POSOBENIE	KON ZAC	22	27	0	39	75	SI	PV	R/C	N	Y	R/C	Y	1	R/C	N	Y	N			
72	UW KOSICE	T60R	KA2		NADPR.OCHR.POSOBENIE	KON ZAC	22	27	0	39	75	SI	PV	R/C	N	Y	R/C	Y	1	R/C	N	Y	N			
73	UW KOSICE	T60R	KA4		NADPR.OCHR.POSOBENIE	KON ZAC	22	27	0	39	75	SI	PV	R/C	N	Y	R/C	Y	1	R/C	N	Y	N			

Proprietary data, company confidential. All rights reserved.
Confie a titre de secret d'entreprise. Tous droits réservés.
Comunicado como segredo empresarial. Reservados todos os direitos.
Confiado como secreto industrial. Nos reservamos todos los derechos.

The reproduction, transmission or use of this document or its is not permitted without express written authority.
Offenders will be liable for damages. All rights, including rights created by patent grant or registration of a utility model or design, are reserved.

Documentation structur: Standard
Source file: KO050722.ODA

			Date	22.07.2005	VSZ KOSICE	SIEMENS AG ISAOOLS	Substation control system 6MB Internally generated indications
			Drawn	LANG			
			Appr.				Table
Remarks	Date	Name	Norm		Orig./Repl. 1/Repl. by		

T = /BM 7
+
-S111
Page

Proprietary data, company confidential. All rights reserved.
Confia a être de secret d'entreprise. Tous droits réservés.
Comunicado como segredo empresarial. Reservados todos os direitos.
Confiado como secreto industrial. Nos reservamos todos los derechos.

The reproduction, transmission or use of this document or its contents is not permitted without express written authority. Offenders will be liable for damages. All rights, including rights created by patent grant or registration of a utility model or design, are reserved.

Line number	Command derivation	Indication derivation	Tele-ctrl LK	Tele-ctrl FP/SC
65			N	N
66		KVIT 8TK	N	N
67	Alarm 1 (Hupenbefehl)		N	N
68	Alarm 1 (Hupenbefehl)		N	N
69	Alarm 1 (Hupenbefehl)		N	N
70	Alarm 1 (Hupenbefehl)		N	N
71	Alarm 1 (Hupenbefehl)		N	N
72	Alarm 1 (Hupenbefehl)		N	N
73	Alarm 1 (Hupenbefehl)		N	N

Documentation structur: Standard
Source file: K0050722.ODA

Date	22.07.2005	VSZ KOSICE	SIEMENS AG ISAOOLS
Drawn	LANG		
Appr.			
Norm		Orig./Repl. 1/Repl. by	

Substation control system 6MB
Internally generated indications
Table

T = /BM 8
+
-S111
Page 8

Rev. | Remarks | Date | Name

Proprietary data, company confidential. All rights reserved.
Confidentiel et propriétaire. Tous droits réservés.
Comunicado como secreto de empresa. Reservados todos os direitos.
Comunicado como secreto de empresa. Reservados todos los derechos.
The reproduction, transmission or use of this document or its contents is not permitted without express written authority. Offenders will be liable for damages. All rights, including rights created by patent grant or registration of a utility model or design, are reserved.

Line number	Station	Section	Bay	Logical device	Lower limit	Value text	Column section	Column bay	Column logical device	Column information	Column value text	Indication type	Control the flag in I/O unit	Anzeige im Bild des 6MB524	Entry in event list	Entry in SML	Entry in alarm list	Archive	Operational indications	Protection indications	Display in diagram	Acknowledge	Display under voltage level	Display in diag. as select. field
1	UW KOSICE	GERAETE-STATUSMELDUNGEN	DE1		LED - ZOBRAZENI	KON ZAC	0	22	0	39	75	SI	PV	PV	R/C	N	N	N			N			PV
2	UW KOSICE	GERAETE-STATUSMELDUNGEN	DE2		LED - ZOBRAZENI	KON ZAC	0	22	0	39	75	SI	PV	PV	R/C	N	N	N			N			PV
3	UW KOSICE	GERAETE-STATUSMELDUNGEN	DE3		LED - ZOBRAZENI	KON ZAC	0	22	0	39	75	SI	PV	PV	R/C	N	N	N			N			PV
4	UW KOSICE	GERAETE-STATUSMELDUNGEN	DE4		LED - ZOBRAZENI	KON ZAC	0	22	0	39	75	SI	PV	PV	R/C	N	N	N			N			PV
5	UW KOSICE	GERAETE-STATUSMELDUNGEN	LZG		LED GESAMTBEFEHL	KON ZAC	0	22	0	39	75	SI	PV	PV	N	N	N	N			N			PV
6	UW KOSICE	GERAETE-STATUSMELDUNGEN	LZG		LED-ANZEIGENTEST		0	22	0	39	0	TR	PV	PV	N	N	N	N			N			PV
7	UW KOSICE	GERAETE-STATUSMELDUNGEN	LZG		MK HUPE		0	22	0	39		TR	PV	PV	N	N	N	N			N			PV
8	UW KOSICE	R110	EA01		STATUS							SI	PV	PV	N	N	N	N			N			PV
9	UW KOSICE	R110	EA01		ZABLOKOVANI POLE	KON ZAC	22	27	0	39	75	SI	PV	PV	R/C	N	N	R/C	Y	N	Y	N	N	PV
10	UW KOSICE	R110	EA01/3		SYNCHRO ABBRUCH	KON ZAC	22	27	0	39	75	TR	PV	PV	O	N	N	R	Y	N	N			PV
11	UW KOSICE	R110	EA01/3		SYNCHRO BEZI	KON ZAC	22	27	0	39	75	SI	PV	PV	R/C	N	N	R/C	Y	N	N			PV
12	UW KOSICE	R110	EA01/3		SYNCHRO MER BEZI	KON ZAC	22	27	0	39	75	SI	PV	PV	R/C	N	N	R/C	Y	N	N			PV
13	UW KOSICE	R110	EA01/3		SYNCHRO NEUSPESNE	KON ZAC	22	27	0	39	75	TR	PV	PV	O	N	N	R	Y	N	N			PV
14	UW KOSICE	R110	EA02		STATUS							SI	PV	PV	N	N	N	N			N			PV
15	UW KOSICE	R110	EA02		ZABLOKOVANI POLE	KON ZAC	22	27	0	39	75	SI	PV	PV	R/C	N	N	R/C	Y	N	Y	N	N	PV
16	UW KOSICE	R110	EA03		STATUS							SI	PV	PV	N	N	N	N			N			PV
17	UW KOSICE	R110	EA03		ZABLOKOVANI POLE	KON ZAC	22	27	0	39	75	SI	PV	PV	R/C	N	N	R/C	Y	N	Y	N	N	PV
18	UW KOSICE	R110	EA04		STATUS							SI	PV	PV	N	N	N	N			N			PV
19	UW KOSICE	R110	EA04		ZABLOKOVANI POLE	KON ZAC	22	27	0	39	75	SI	PV	PV	R/C	N	N	R/C	Y	N	Y	N	N	PV
20	UW KOSICE	R110	EA05		Mark.Messwerte 5Sek.	KON ZAC	22	27	0	39	75	SI	PV	PV	N	N	N	N			Y	N	N	PV
21	UW KOSICE	R110	EA05		Mark.Messwerte E/A	KON ZAC	22	27	0	39	75	SI	PV	PV	N	N	N	N			Y	N	N	PV
22	UW KOSICE	R110	EA05		Mark.Syn 7VK512	KON ZAC	22	27	0	39	75	SI	PV	PV	N	N	N	N			N			PV
23	UW KOSICE	R110	EA05		STATUS							SI	PV	PV	N	N	N	N			N			PV
24	UW KOSICE	R110	EA05		ZABLOKOVANI POLE	KON ZAC	22	27	0	39	75	SI	PV	PV	R/C	N	N	R/C	Y	N	Y	N	N	PV
25	UW KOSICE	R110	EA06		STATUS							SI	PV	PV	N	N	N	N			N			PV
26	UW KOSICE	R110	EA06		ZABLOKOVANI POLE	KON ZAC	22	27	0	39	75	SI	PV	PV	R/C	N	N	R/C	Y	N	Y	N	N	PV
27	UW KOSICE	R110	EA07		STATUS							SI	PV	PV	N	N	N	N			N			PV
28	UW KOSICE	R110	EA07		ZABLOKOVANI POLE	KON ZAC	22	27	0	39	75	SI	PV	PV	R/C	N	N	R/C	Y	N	Y	N	N	PV
29	UW KOSICE	R110	EA08		STATUS							SI	PV	PV	N	N	N	N			N			PV
30	UW KOSICE	R110	EA08		ZABLOKOVANI POLE	KON ZAC	22	27	0	39	75	SI	PV	PV	R/C	N	N	R/C	Y	N	Y	N	N	PV
31	UW KOSICE	R110	EA09		STATUS							SI	PV	PV	N	N	N	N			N			PV
32	UW KOSICE	R110	EA09		ZABLOKOVANI POLE	KON ZAC	22	27	0	39	75	SI	PV	PV	R/C	N	N	R/C	Y	N	Y	N	N	PV

Documentation structur: Standard
Source file: KO050722.ODA

Date	22.07.2005	VSZ KOSICE	SIEMENS AG ISATOOLS
Drawn	LANG		
Appr.			
Norm		Orig./Repl. 1/Repl. by	

Substation control system 6MB
Flag settings
Table

T = /BM 9
+
-S111
Page

Remarks | Date | Name

Line number	Weiterleiten an LSANET / LSA WinCC	Stat. change information: Station	Section	Bay	Logical device	Lower limit	Command derivation	Simulated voltage	Special processing	
1	N									
2	N									
3	N									
4	N									
5	N									
6	N									
7	N						Alarm 1 (Hupenbefehl)			
8	N	UW KOSICE	R110	EA01	ODPOJOVAC Q1	SCHALTZUSTAND				
9	N						Feldsperre			
10	N									
11	N									
12	N									
13	N									
14	N	UW KOSICE	R110	EA02	ODPOJOVAC Q1	SCHALTZUSTAND				
15	N						Feldsperre			
16	N	UW KOSICE	R110	EA03	ODPOJOVAC Q1	SCHALTZUSTAND				
17	N						Feldsperre			
18	N	UW KOSICE	R110	EA04	ODPOJOVAC Q1	SCHALTZUSTAND				
19	N						Feldsperre			
20	N						Messwertanstoss Kupplung aus	Verteiler Frek1,2,Winkel,Spannung		
21	N							Verteiler Frek1,2,Winkel,Spannung		
22	N									
23	N	UW KOSICE	R110	EA05	ODPOJOVAC Q1	SCHALTZUSTAND				
24	N						Feldsperre			
25	N	UW KOSICE	R110	EA06	ODPOJOVAC Q1	SCHALTZUSTAND				
26	N						Feldsperre			
27	N	UW KOSICE	R110	EA07	ODPOJOVAC Q1	SCHALTZUSTAND				
28	N						Feldsperre			
29	N	UW KOSICE	R110	EA08	ODPOJOVAC Q1	SCHALTZUSTAND				
30	N						Feldsperre			
31	N	UW KOSICE	R110	EA08		CHYBA OBSLUHY				
32	N						Feldsperre			

Proprietary data, company confidential. All rights reserved.
Confie a titre de secret d'entreprise. Tous droits réservés.
Comunicado como segredo empresarial. Reservados todos os direitos.
Confiado como secreto industrial. Nos reservamos todos los derechos.

The reproduction, transmission or use of this document or its is not permitted without express written authority.
Offenders will be liable for damages. All rights, including rights created by patent grant or registration of a utility model or design, are reserved.

Documentation structur: Standard
Source file: KO050722.ODA

Rev.	Remarks	Date	Name	Date	22.07.2005	VSZ KOSICE	SIEMENS AG ISA TOOLS	Substation control system 6MB Flag settings	T = /BM 10
				Drawn	LANG				+
				Appr.					
				Norm		Orig./Repl. 1/Repl. by		Table	-S111 Page 10

Line number	Interlocking type:	Tele-ctrl LK	FP/SC	Command from LK	Command from FP/SC
1	KEINE VERRIEGELUNG	N	N	N	N
2	KEINE VERRIEGELUNG	N	N	N	N
3	KEINE VERRIEGELUNG	N	N	N	N
4	KEINE VERRIEGELUNG	N	N	N	N
5	KEINE VERRIEGELUNG	N	N	N	N
6	KEINE VERRIEGELUNG	N	N	N	N
7	KEINE VERRIEGELUNG	N	N	N	N
8	KEINE VERRIEGELUNG	N	N	N	N
9	KEINE VERRIEGELUNG	N	N	N	N
10	KEINE VERRIEGELUNG	N	N	N	N
11	KEINE VERRIEGELUNG	N	N	N	N
12	KEINE VERRIEGELUNG	N	N	N	N
13	KEINE VERRIEGELUNG	N	N	N	N
14	KEINE VERRIEGELUNG	N	N	N	N
15	KEINE VERRIEGELUNG	N	N	N	N
16	KEINE VERRIEGELUNG	N	N	N	N
17	KEINE VERRIEGELUNG	N	N	N	N
18	KEINE VERRIEGELUNG	N	N	N	N
19	KEINE VERRIEGELUNG	N	N	N	N
20	KEINE VERRIEGELUNG	N	N	N	N
21	KEINE VERRIEGELUNG	N	N	N	N
22	KEINE VERRIEGELUNG	N	N	N	N
23	KEINE VERRIEGELUNG	N	N	N	N
24	KEINE VERRIEGELUNG	N	N	N	N
25	KEINE VERRIEGELUNG	N	N	N	N
26	KEINE VERRIEGELUNG	N	N	N	N
27	KEINE VERRIEGELUNG	N	N	N	N
28	KEINE VERRIEGELUNG	N	N	N	N
29	KEINE VERRIEGELUNG	N	N	N	N
30	KEINE VERRIEGELUNG	N	N	N	N
31	KEINE VERRIEGELUNG	N	N	N	N
32	KEINE VERRIEGELUNG	N	N	N	N

Proprietary data, company confidential. All rights reserved.
Confie a titre de secret d'entreprise. Tous droits reservés.
Comunicado como segredo empresarial. Reservados todos os direitos.
Confiado como secreto industrial. Nos reservamos todos los derechos.

The reproduction, transmission or use of this document or its is not permitted without expres written authority.
Offenders will be liable for damages. All rights, including rights created by patent grant or registration of a utility model or design, are reserved.

Documentation structur: Standard
Source file: KO050722.ODA

Rev	Remarks	Date	Name	Date	22.07.2005	VSZ KOSICE	SIEMENS AG ISA TOOLS	Substation control system 6MB Flag settings	T = /BM 11
				Drawn	LANG				+
				Appr.					-S111 Page
				Norm		Orig./Repl. 1/Repl. by		Table	

Proprietary data, company confidential. All rights reserved.
Confia a ltre de secret d'entreprise. Tous droits réservés.
Comunicado como segredo empresarial. Reservados todos os direitos
Confiado como secreto industrial. Nos reservamos todos los derechos.

The reproduction, transmission or use of this document or its
is not permitted without expres written authority.
Offenders will be liable for damages. All rights, including rights
created by patent grant or registration of a utility model or design, are reserved.

Line number	Station	Section	Bay	Logical device	Lower limit	Value text	Column section	Column bay	Column logical device	Column information	Column value text	Indication type	Control the flag in I/O unit	Anzeige im Bild des 6MB524	Entry in event list	Entry in SML	Entry in alarm list	Archive	Operational indications	Protection indications	Display in diagram	Acknowledge	Display under voltage level	Display in diag. as select. field
33	UW KOSICE	R110	EA10		STATUS							SI	PV	PV	N	N	N	N			N			PV
34	UW KOSICE	R110	EA10		ZABLOKOVANI POLE	KON ZAC	22	27	0	39	75	SI	PV	PV	R/C	N	N	R/C	Y	N	Y	N	N	PV
35	UW KOSICE	R110	EA11		STATUS							SI	PV	PV	N	N	N	N			N			PV
36	UW KOSICE	R110	EA11		ZABLOKOVANI POLE	KON ZAC	22	27	0	39	75	SI	PV	PV	R/C	N	N	R/C	Y	N	Y	N	N	PV
37	UW KOSICE	R110	EA12		STATUS							SI	PV	PV	N	N	N	N			N			PV
38	UW KOSICE	R110	EA12		ZABLOKOVANI POLE	KON ZAC	22	27	0	39	75	SI	PV	PV	R/C	N	N	R/C	Y	N	Y	N	N	PV
39	UW KOSICE	R110	EA13		STATUS							SI	PV	PV	N	N	N	N			N			PV
40	UW KOSICE	R110	EA13		ZABLOKOVANI POLE	KON ZAC	22	27	0	39	75	SI	PV	PV	R/C	N	N	R/C	Y	N	Y	N	N	PV
41	UW KOSICE	R110	EA15		STATUS							SI	PV	PV	N	N	N	N			N			PV
42	UW KOSICE	R110	EA15		ZABLOKOVANI POLE	KON ZAC	22	27	0	39	75	SI	PV	PV	R/C	N	N	R/C	Y	N	Y	N	N	PV
43	UW KOSICE	R110	EA16		STATUS							SI	PV	PV	N	N	N	N			N			PV
44	UW KOSICE	R110	EA16		ZABLOKOVANI POLE	KON ZAC	22	27	0	39	75	SI	PV	PV	R/C	N	N	R/C	Y	N	Y	N	N	PV
45	UW KOSICE	R110	EA17		STATUS							SI	PV	PV	N	N	N	N			N			PV
46	UW KOSICE	R110	EA17		ZABLOKOVANI POLE	KON ZAC	22	27	0	39	75	SI	PV	PV	R/C	N	N	R/C	Y	N	Y	N	N	PV
47	UW KOSICE	R110	EA18		STATUS							SI	PV	PV	N	N	N	N			N			PV
48	UW KOSICE	R110	EA18		ZABLOKOVANI POLE	KON ZAC	22	27	0	39	75	SI	PV	PV	R/C	N	N	R/C	Y	N	Y	N	N	PV
49	UW KOSICE	R110	EA19		STATUS							SI	PV	PV	N	N	N	N			N			PV
50	UW KOSICE	R110	EA19		ZABLOKOVANI POLE	KON ZAC	22	27	0	39	75	SI	PV	PV	R/C	N	N	R/C	Y	N	Y	N	N	PV
51	UW KOSICE	R110	EA20		STATUS							SI	PV	PV	N	N	N	N			N			PV
52	UW KOSICE	R110	EA20		ZABLOKOVANI POLE	KON ZAC	22	27	0	39	75	SI	PV	PV	R/C	N	N	R/C	Y	N	Y	N	N	PV
53	UW KOSICE	R110	EA21		STATUS							SI	PV	PV	N	N	N	N			N			PV
54	UW KOSICE	R110	EA21		ZABLOKOVANI POLE	KON ZAC	22	27	0	39	75	SI	PV	PV	R/C	N	N	R/C	Y	N	Y	N	N	PV
55	UW KOSICE	R110	EA23		STATUS							SI	PV	PV	N	N	N	N			N			PV
56	UW KOSICE	R110	EA23		ZABLOKOVANI POLE	KON ZAC	22	27	0	39	75	SI	PV	PV	R/C	N	N	R/C	Y	N	Y	N	N	PV
57	UW KOSICE	R220	DA01		STATUS							SI	PV	PV	N	N	N	N			N			PV
58	UW KOSICE	R220	DA01		ZABLOKOVANI POLE	KON ZAC	22	27	0	39	75	SI	PV	PV	R/C	N	N	R/C	Y	N	Y	N	N	PV
59	UW KOSICE	R220	DA02		STATUS							SI	PV	PV	N	N	N	N			N			PV
60	UW KOSICE	R220	DA02		ZABLOKOVANI POLE	KON ZAC	22	27	0	39	75	SI	PV	PV	R/C	N	N	R/C	Y	N	Y	N	N	PV
61	UW KOSICE	ROZVODNA			RIZENI RD/MISTNE	RD MISTNE	22	27	0	39	75	SI	PV	PV	R/C	N	N	R/C	Y	N	Y	N	N	PV
62	UW KOSICE	T201	TERC		STATUS							SI	PV	PV	N	N	N	N			N			PV
63	UW KOSICE	T201	TERC		ZABLOKOVANI POLE	KON ZAC	22	27	0	39	75	SI	PV	PV	R/C	N	N	R/C	Y	N	Y	N	N	PV
64	UW KOSICE	T202	TERC		STATUS							SI	PV	PV	N	N	N	N			N			PV

Documentation structur: Standard
Source file: KO050722.ODA

Date	22.07.2005	VSZ KOSICE	SIEMENS AG ISAOOLS
Drawn	LANG		
Appr.			
Rev. / Remarks	Date / Name Norm	Orig./Repl. 1/Repl. by	

Substation control system 6MB
Flag settings
Table

T = /BM 12
+
-S111
Page 12

Proprietary data, company confidential. All rights reserved.
Confie a titre de secret d'entreprise. Tous droits r,serv,s.
Comunicado como segredo empresarial. Reservados todos os direitos.
Confiado como secreto industrial. Nos reservamos todos los derechos.

The reproduction, transmission or use of this document or its is not permitted without expres written authority.
Offenders will be liable for damages. All rights, including rights created by patent grant or registration of a utility model or design, are reserved.

Documentation structur: Standard
Source file: KO050722.ODA

Line number	Weiterleiten an LSANET / LSA WinCC	Stat. change information: Station	Section	Bay	Logical device	Lower limit	Command derivation	Simulated voltage	Special processing	
33	N	UW KOSICE	R110	EA10	ODPOJOVAC Q1	SCHALTZUSTAND				
34	N						Feldsperre			
35	N	UW KOSICE	R110	EA11	ODPOJOVAC Q1	SCHALTZUSTAND				
36	N						Feldsperre			
37	N	UW KOSICE	R110	EA12	ODPOJOVAC Q1	SCHALTZUSTAND				
38	N						Feldsperre			
39	N	UW KOSICE	R110	EA13	ODPOJOVAC Q1	SCHALTZUSTAND				
40	N						Feldsperre			
41	N	UW KOSICE	R110	EA15	ODPOJOVAC Q1	SCHALTZUSTAND				
42	N						Feldsperre			
43	N	UW KOSICE	R110	EA16	ODPOJOVAC Q1	SCHALTZUSTAND				
44	N						Feldsperre			
45	N	UW KOSICE	R110	EA17	ODPOJOVAC Q1	SCHALTZUSTAND				
46	N						Feldsperre			
47	N	UW KOSICE	R110	EA18	ODPOJOVAC Q1	SCHALTZUSTAND				
48	N						Feldsperre			
49	N	UW KOSICE	R110	EA19	ODPOJOVAC Q1	SCHALTZUSTAND				
50	N						Feldsperre			
51	N	UW KOSICE	R110	EA20	ODPOJOVAC Q1	SCHALTZUSTAND				
52	N						Feldsperre			
53	N	UW KOSICE	R110	EA21	ODPOJOVAC Q1	SCHALTZUSTAND				
54	N						Feldsperre			
55	N	UW KOSICE	R110	EA23	ODPOJOVAC Q1	SCHALTZUSTAND				
56	N						Feldsperre			
57	N	UW KOSICE	R220	DA01	ODPOJOVAC Q1	SCHALTZUSTAND				
58	N						Feldsperre			
59	N	UW KOSICE	R220	DA02	ODPOJOVAC Q1	SCHALTZUSTAND				
60	N						Feldsperre			
61	N								FERNWIRKSPERRE	
62	N	UW KOSICE	T201	TERC	ODPOJOVAC Q1	SCHALTZUSTAND				
63	N						Feldsperre			
64	N	UW KOSICE	T202	TERC	ODPOJOVAC Q1	SCHALTZUSTAND				

			Date	22.07.2005	VSZ KOSICE	SIEMENS AG ISA TOOLS	Substation control system 6MB Flag settings	T =	/BM 13
			Drawn	LANG				+	
			Appr.					-S111	Page 13
Rc	Remarks	Date	Name	Norm	Orig./Repl. 1/Repl. by		Table		

Proprietary data, company confidential. All rights reserved.
Confia a tire da secret d'entreprise. Tous droits reservs.
Comunicado como segredo empresarial. Reservados todos os direitos.
Confiado como secreto industrial. Nos reservamos todos los derechos.

The reproduction, transmission or use of this document or its
is not permitted without expres written authority.
Offenders will be liable for damages. All rights, including rights
created by patent grant or registration of a utility model or design, are reserved

Line number	Interlocking type:	Tele-ctrl LK	FP/SC	Command from LK	Command from FP/SC
33	KEINE VERRIEGELUNG	N	N	N	N
34	KEINE VERRIEGELUNG	N	N	N	N
35	KEINE VERRIEGELUNG	N	N	N	N
36	KEINE VERRIEGELUNG	N	N	N	N
37	KEINE VERRIEGELUNG	N	N	N	N
38	KEINE VERRIEGELUNG	N	N	N	N
39	KEINE VERRIEGELUNG	N	N	N	N
40	KEINE VERRIEGELUNG	N	N	N	N
41	KEINE VERRIEGELUNG	N	N	N	N
42	KEINE VERRIEGELUNG	N	N	N	N
43	KEINE VERRIEGELUNG	N	N	N	N
44	KEINE VERRIEGELUNG	N	N	N	N
45	KEINE VERRIEGELUNG	N	N	N	N
46	KEINE VERRIEGELUNG	N	N	N	N
47	KEINE VERRIEGELUNG	N	N	N	N
48	KEINE VERRIEGELUNG	N	N	N	N
49	KEINE VERRIEGELUNG	N	N	N	N
50	KEINE VERRIEGELUNG	N	N	N	N
51	KEINE VERRIEGELUNG	N	N	N	N
52	KEINE VERRIEGELUNG	N	N	N	N
53	KEINE VERRIEGELUNG	N	N	N	N
54	KEINE VERRIEGELUNG	N	N	N	N
55	KEINE VERRIEGELUNG	N	N	N	N
56	KEINE VERRIEGELUNG	N	N	N	N
57	KEINE VERRIEGELUNG	N	N	N	N
58	KEINE VERRIEGELUNG	N	N	N	N
59	KEINE VERRIEGELUNG	N	N	N	N
60	KEINE VERRIEGELUNG	N	N	N	N
61	KEINE VERRIEGELUNG	N	N	N	N
62	KEINE VERRIEGELUNG	N	N	N	N
63	KEINE VERRIEGELUNG	N	N	N	N
64	KEINE VERRIEGELUNG	N	N	N	N

Proprietary data, company confidential. All rights reserved.
Confie a titre de secret d'entreprise. Tous droits reservis.
Comunicado como secreto empresarial. Reservados todos os direitos.
Confiado como secreto industrial. Nos reservamos todos los derechos.

The reproduction, transmission or use of this document or its contents is not permitted without express written authority. Offenders will be liable for damages. All rights, including rights created by patent grant or registration of a utility model or design, are reserved.

Line number	Station	Section	Bay	Logical device	Lower limit	Value text	Column section	Column bay	Column logical device	Column information	Column value text	Indication type	Control the flag in I/O unit	Anzeige im Bild des 6MB524	Entry in event list	Entry in SML	Entry in alarm list	Archive	Operational indications	Protection indications	Display in diagram	Acknowledge	Display under voltage level	Display in diag. as select. field
65	UW KOSICE	T202	TERC		ZABLOKOVANI POLE	KON ZAC	22	27	0	39	75	SI	PV	PV	R/C	N	N	R/C	Y	N	Y	N	N	PV

Documentation structur: Standard
Source file: KO050722.ODA

			Date	22.07.2005	VSZ KOSICE	SIEMENS AG ISALOOLS	Substation control system 6MB
			Drawn	LANG			Flag settings
			Appr.				
Rev	Remarks	Date	Name	Norm	Orig./Repl. 1/Repl. by		Table

T = /BM 15
+
-S111
Page

Line number	Weiterleiten an LSANET / LSA WinCC	Stat. change information: Station	Section	Bay	Logical device	Lower limit	Command derivation	Simulated voltage	Special processing	
65	N						Feldsperre			

Proprietary data, company confidential. All rights reserved.
Confie a titre de secret d'entreprise. Tous droits réservés.
Comunicado como segredo empresarial. Reservados todos os direitos.
Confiado como secreto industrial. Nos reservamos todos los derechos.

The reproduction, transmission or use of this document or its
is not permitted without expres written authority.
Offenders will be liable for damages. All rights, including rights
created by patent grant or registration of a utility model or design, are reserved.

Documentation structur: Standard
Source file: KO050722.ODA

Rev.	Remarks	Date	Name	Date	22.07.2005	VSZ KOSICE	SIEMENS AG ISA TOOLS	Substation control system 6MB Flag settings	T = /BM 16
				Drawn	LANG				+
				Appr.					
				Norm		Orig./Repl. 1/Repl. by		Table	-S111 Page 16

Line number	Interlocking type:	Tele-ctrl LK	FP/SC	Command from LK	Command from FP/SC
65	KEINE VERRIEGELUNG	N	N	N	N

Proprietary data, company confidential. All rights reserved
Confidential de secret d'entreprise. Tous droits réservés
Comunicado como secreto empresarial. Reservados todos os direitos.
Comunicado como secreto industrial. Nos reservamos todos los derechos.

The reproduction, transmission or use of this document or its contents is not permitted without express written authority. Offenders will be liable for damages. All rights, including rights created by patent grant or registration of a utility model or design, are reserved

Documentation structur: Standard
Source file: KO050722.ODA

			Date	22.07.2005	VSZ KOSICE
			Drawn	LANG	
			Appr.		
R	Remarks	Date	Name	Norm	Orig./Repl. 1/Repl. by

SIEMENS AG
ISATOOLS

Substation control system 6MB
Flag settings

Table

T = /BM 17
+

-S111

Page

Line number	Station	Section	Bay	Logical device	Lower limit	Display in diagram	Archive	Keep non-return pointer	Calculated demand value	Derive percentage value	Derive metered value
1	UW KOSICE	R110	EA05	MESSWERTE SPANNUNG	Nachgebildet Frek 1	Y	N	PV	PV	PV	PV
2	UW KOSICE	R110	EA05	MESSWERTE SPANNUNG	Nachgebildet Frek 2	Y	N	PV	PV	PV	PV
3	UW KOSICE	R110	EA05	MESSWERTE SPANNUNG	Nachgebildet Spannung	Y	N	PV	PV	PV	PV
4	UW KOSICE	R110	EA05	MESSWERTE SPANNUNG	Nachgebildet Winkel	Y	N	PV	PV	PV	PV

Proprietary data, company confidential. All rights reserved.
Confie a titre de secret d'entreprise. Tous droits reservés.
Comunicado como segredo empresarial. Reservados todos os direitos.
Confiado como secreto industrial. Nos reservamos todos los derechos.

The reproduction, transmission or use of theis document or its is not permitted without expres written authority.
Offenders will be liable for damages. All rights, including rights created by patent grant or registration of a utility model or design, are reserved.

Documentation structur: Standard
Source file: KO050722.ODA

Rev.	Remarks	Date	Name	Date	22.07.2005	VSZ KOSICE	SIEMENS AG ISAOOLS	Substation control system 6MB Simulated voltage	T = /BM 18
				Drawn	LANG				+
				Appr.					
				Norm		Orig./Repl. 1/Repl. by		Table	-S111 Page 18

Proprietary data, company confidential. All rights reserved.
Confie a titre de secret d'entreprise. Tous droits reservis.
Comunicado como secreto empresarial. Reservados todos os direitos.
Confiado como secreto industrial. Nos reservamos todos los derechos.

The reproduction, transmission or use of this document or its is not permitted without express written authority. Offenders will be liable for damages. All rights, including rights created by patent grant or registration of a utility model or design, are reserved.

Line number	Station	Section	Bay	Logical device	Lower limit	Value text		Column section	Column bay	Column logical device	Column information	Column value text	Indication type	Entry in event list	Entry in alarm list	Acknowledge	Display in indication area	Indication class	Entry in SML	Display in diagram	Archive	Operational indications	Protection indications
1	NLS		LGZ		PORUCHA	KON	ZAC	0	22	0	39	75	SI	R/C	N				N	N	R/C	Y	N
2	UW KOSICE	GERAETE-STATUSMELDUNGEN	AE01		CHYBA AD PREVODNIKU	KON	ZAC	0	22	0	39	75	SI	R/C	Y	R/C	Y	1	N	N	N		
3	UW KOSICE	GERAETE-STATUSMELDUNGEN	AE01		GA-ENDE-MARKIERUNG								SI	N	N				N	N	N		
4	UW KOSICE	GERAETE-STATUSMELDUNGEN	AE01		NABEHNUTIE			0	22	0	39	0	TR	O	N				N	N	N		
5	UW KOSICE	GERAETE-STATUSMELDUNGEN	AE01		NEPRIPRAVENY	KON	ZAC	0	22	0	39	75	SI	R/C	Y	R/C	Y	1	N	N	N		
6	UW KOSICE	GERAETE-STATUSMELDUNGEN	AE01		PORUCHA	KON	ZAC	0	22	0	39	75	SI	R/C	Y	R/C	Y	1	N	N	N		
7	UW KOSICE	GERAETE-STATUSMELDUNGEN	AE01		REFERENZZEIT																		
8	UW KOSICE	GERAETE-STATUSMELDUNGEN	AE01		SYSTEMOVA HLASENI			0	36	0	40	0		O							N		
9	UW KOSICE	GERAETE-STATUSMELDUNGEN	AE01		VYSIEL.BUF.PREPLNENY	KON	ZAC	0	22	0	39	75	SI	O	N				N	N	N		
10	UW KOSICE	GERAETE-STATUSMELDUNGEN	BF01		GA-ENDE-MARKIERUNG								SI	N	N				N	N	N		
11	UW KOSICE	GERAETE-STATUSMELDUNGEN	BF01		NABEHNUTIE			0	22	0	39		TR	O	N				N	N	N		
12	UW KOSICE	GERAETE-STATUSMELDUNGEN	BF01		NEPRIPRAVENY	KON	ZAC	0	22	0	39	75	SI	R/C	Y	R/C	Y	1	N	N	N		
13	UW KOSICE	GERAETE-STATUSMELDUNGEN	BF01		PORUCHA	KON	ZAC	0	22	0	39	75	SI	R/C	N				N	N	N		
14	UW KOSICE	GERAETE-STATUSMELDUNGEN	BF01		PORUCHA DE	KON	ZAC	0	22	0	39	75	SI	N	N				N	N	N		
15	UW KOSICE	GERAETE-STATUSMELDUNGEN	BF01		REFERENZZEIT																		
16	UW KOSICE	GERAETE-STATUSMELDUNGEN	BF01		SYSTEMOVA HLASENI			0	36					O							N		
17	UW KOSICE	GERAETE-STATUSMELDUNGEN	BF01		VYSIEL.BUF.PREPLNENY	KON	ZAC	0	22	0	39	75	SI	O	N				N	N	N		
18	UW KOSICE	GERAETE-STATUSMELDUNGEN	DE1		BLOKOVANI DE KMITU	KON	ZAC	0	22	0	39	75	SI	R/C	N				N	N	N		
19	UW KOSICE	GERAETE-STATUSMELDUNGEN	DE1		GA-ENDE-MARKIERUNG								SI	N	N				N	N	N		
20	UW KOSICE	GERAETE-STATUSMELDUNGEN	DE1		NABEHNUTIE			0	22	0	39	0	TR	O	N				N	N	N		
21	UW KOSICE	GERAETE-STATUSMELDUNGEN	DE1		NEPRIPRAVENY	KON	ZAC	0	22	0	39	75	SI	R/C	Y	R/C	Y	1	N	N	N		
22	UW KOSICE	GERAETE-STATUSMELDUNGEN	DE1		PORUCHA	KON	ZAC	0	22	0	39	75	SI	R/C	Y	R/C	Y	1	N	N	N		
23	UW KOSICE	GERAETE-STATUSMELDUNGEN	DE1		PORUCHA DE	KON	ZAC	0	22	0	39	75	SI	R/C	Y	R/C	Y	1	N	N	N		
24	UW KOSICE	GERAETE-STATUSMELDUNGEN	DE1		REFERENZZEIT																		
25	UW KOSICE	GERAETE-STATUSMELDUNGEN	DE1		SYSTEMOVA HLASENI			0	36	0	40	0		O							N		
26	UW KOSICE	GERAETE-STATUSMELDUNGEN	DE1		VYSIEL.BUF.PREPLNENY	KON	ZAC	0	22	0	39	75	SI	O	N				N	N	N		
27	UW KOSICE	GERAETE-STATUSMELDUNGEN	DE2		BLOKOVANI DE KMITU	KON	ZAC	0	22	0	39	75	SI	R/C	N				N	N	N		
28	UW KOSICE	GERAETE-STATUSMELDUNGEN	DE2		GA-ENDE-MARKIERUNG								SI	N	N				N	N	N		
29	UW KOSICE	GERAETE-STATUSMELDUNGEN	DE2		NABEHNUTIE			0	22	0	39	0	TR	O	N				N	N	N		
30	UW KOSICE	GERAETE-STATUSMELDUNGEN	DE2		NEPRIPRAVENY	KON	ZAC	0	22	0	39	75	SI	R/C	Y	R/C	Y	1	N	N	N		
31	UW KOSICE	GERAETE-STATUSMELDUNGEN	DE2		PORUCHA	KON	ZAC	0	22	0	39	75	SI	R/C	Y	R/C	Y	1	N	N	N		
32	UW KOSICE	GERAETE-STATUSMELDUNGEN	DE2		PORUCHA DE	KON	ZAC	0	22	0	39	75	SI	R/C	Y	R/C	Y	1	N	N	N		

Documentation structur: Standard
Source file: KO050722.ODA

Date	22.07.2005	VSZ KOSICE	SIEMENS AG ISATOOLS
Drawn	LANG		
Appr.			
Remarks	Date	Name	Norm
		Orig./Repl. 1/Repl. by	

Substation control system 6MB
Status indications/system indications/reference time
Table

T = /BM 19
+
-S111
Page

Proprietary data, company confidential. All rights reserved.
Confie a titre de secret d'entreprise. Tous droits reservés.
Comunicado como segredo empresarial. Reservados todos os direitos.
Confiado como secreto industrial. Nos reservamos todos los derechos.

The reproduction, transmission or use of this document or its
is not permitted without express written authority.
Offenders will be liable for damages. All rights, including rights
created by patent grant or registration of a utility model or design, are reserved.

Documentation structur: Standard
Source file: KO050722.ODA

Line number	Command derivation	Indication derivation	
1			
2			
3			
4			
5			
6			
7			
8			
9			
10	FP-Livekontakt		
11			
12	Alarm 1 (Hupenbefehl)		
13			
14			
15			
16			
17			
18			
19			
20			
21			
22			
23			
24			
25			
26			
27			
28			
29			
30			
31			
32			

Rev.	Remarks	Date	Name	Date	22.07.2005	VSZ KOSICE	SIEMENS AG ISA TOOLS	Substation control system 6MB Status indications/system indications/reference time	T = /BM 20
				Drawn	LANG				+
				Appr.					
				Norm		Orig./Repl. 1/Repl. by		Table	-S111 Page 20

Proprietary data, company confidential. All rights reserved.
Confia a tire de secret d'entreprise. Tous droits reservis.
Comunicado como segredo empresarial. Reservados todos os direitos.
Confiado como secreto industrial. Nos reservamos todos los derechos.

The reproduction, transmission or use of this document or its contents is not permitted without express written authority. Offenders will be liable for damages. All rights, including rights created by patent grant or registration of a utility model or design, are reserved.

Line number	Station	Section	Bay	Logical device	Lower limit	Value text	Column section	Column bay	Column logical device	Column information	Column value text	Indication type	Entry in event list	Entry in alarm list	Acknowledge	Display in indication area	Indication class	Entry in SML	Display in diagram	Archive	Operational indications	Protection indications
33	UW KOSICE	GERAETE-STATUSMELDUNGEN	DE2		REFERENZZEIT																	
34	UW KOSICE	GERAETE-STATUSMELDUNGEN	DE2		SYSTEMOVA HLASENI		0	36	0	40	0		O							N		
35	UW KOSICE	GERAETE-STATUSMELDUNGEN	DE2		VYSIEL.BUF.PREPLNENY	KON ZAC	0	22	0	39	75	SI	O	N				N	N	N		
36	UW KOSICE	GERAETE-STATUSMELDUNGEN	DE3		BLOKOVANI DE KMITU	KON ZAC	0	22	0	39	75	SI	R/C	N				N	N	N		
37	UW KOSICE	GERAETE-STATUSMELDUNGEN	DE3		GA-ENDE-MARKIERUNG							SI	N	N				N	N	N		
38	UW KOSICE	GERAETE-STATUSMELDUNGEN	DE3		NABEHNUTIE		0	22	0	39	0	TR	O	N				N	N	N		
39	UW KOSICE	GERAETE-STATUSMELDUNGEN	DE3		NEPRIPRAVENY	KON ZAC	0	22	0	39	75	SI	R/C	Y	R/C	Y	1	N	N	N		
40	UW KOSICE	GERAETE-STATUSMELDUNGEN	DE3		PORUCHA	KON ZAC	0	22	0	39	75	SI	R/C	Y	R/C	Y	1	N	N	N		
41	UW KOSICE	GERAETE-STATUSMELDUNGEN	DE3		PORUCHA DE	KON ZAC	0	22	0	39	75	SI	R/C	Y	R/C	Y	1	N	N	N		
42	UW KOSICE	GERAETE-STATUSMELDUNGEN	DE3		REFERENZZEIT																	
43	UW KOSICE	GERAETE-STATUSMELDUNGEN	DE3		SYSTEMOVA HLASENI		0	36	0	40	0		O							N		
44	UW KOSICE	GERAETE-STATUSMELDUNGEN	DE3		VYSIEL.BUF.PREPLNENY	KON ZAC	0	22	0	39	75	SI	O	N				N	N	N		
45	UW KOSICE	GERAETE-STATUSMELDUNGEN	DE4		BLOKOVANI DE KMITU	KON ZAC	0	22	0	39	75	SI	R/C	N				N	N	N		
46	UW KOSICE	GERAETE-STATUSMELDUNGEN	DE4		GA-ENDE-MARKIERUNG							SI	N	N				N	N	N		
47	UW KOSICE	GERAETE-STATUSMELDUNGEN	DE4		NABEHNUTIE		0	22	0	39	0	TR	O	N				N	N	N		
48	UW KOSICE	GERAETE-STATUSMELDUNGEN	DE4		NEPRIPRAVENY	KON ZAC	0	22	0	39	75	SI	R/C	Y	R/C	Y	1	N	N	N		
49	UW KOSICE	GERAETE-STATUSMELDUNGEN	DE4		PORUCHA	KON ZAC	0	22	0	39	75	SI	R/C	Y	R/C	Y	1	N	N	N		
50	UW KOSICE	GERAETE-STATUSMELDUNGEN	DE4		PORUCHA DE	KON ZAC	0	22	0	39	75	SI	R/C	Y	R/C	Y	1	N	N	N		
51	UW KOSICE	GERAETE-STATUSMELDUNGEN	DE4		REFERENZZEIT																	
52	UW KOSICE	GERAETE-STATUSMELDUNGEN	DE4		SYSTEMOVA HLASENI		0	36	0	40	0		O							N		
53	UW KOSICE	GERAETE-STATUSMELDUNGEN	DE4		VYSIEL.BUF.PREPLNENY	KON ZAC	0	22	0	39	75	SI	O	N				N	N	N		
54	UW KOSICE	GERAETE-STATUSMELDUNGEN	FA		GA-ENDE-MARKIERUNG							SI	N	N				N	N	N		
55	UW KOSICE	GERAETE-STATUSMELDUNGEN	FA		NABEHNUTIE		0	22	0	39		TR	O	N				N	N	N		
56	UW KOSICE	GERAETE-STATUSMELDUNGEN	FA		NEPRIPRAVENY	KON ZAC	0	22	0	39	75	SI	R/C	Y	R/C	Y	1	N	N	N		
57	UW KOSICE	GERAETE-STATUSMELDUNGEN	FA		PORUCHA	KON ZAC	0	22	0	39	75	SI	R/C	N				N	N	N		
58	UW KOSICE	GERAETE-STATUSMELDUNGEN	FA		REFERENZZEIT																	
59	UW KOSICE	GERAETE-STATUSMELDUNGEN	FA		SYSTEMOVA HLASENI		0	36					O							N		
60	UW KOSICE	GERAETE-STATUSMELDUNGEN	LW1		CHYBA ZAPISU		0	22	0	39		TR	R/C	N				N	N	R	Y	N
61	UW KOSICE	GERAETE-STATUSMELDUNGEN	LW1		DISKETA PLNA		0	22	0	39		TR	O	N				N	N	N		
62	UW KOSICE	GERAETE-STATUSMELDUNGEN	LW1		DISKETA PRAZDNA		0	22	0	39		TR	O	N				N	N	N		
63	UW KOSICE	GERAETE-STATUSMELDUNGEN	LW1		DISKETA ZAPLNENA NA 90%		0	22	0	39		TR	O	N				N	N	N		
64	UW KOSICE	GERAETE-STATUSMELDUNGEN	LW1		PORUCHA	KON ZAC	0	22	0	39	75	SI	R/C	Y	R/C	Y	1	N	N	N		

Documentation structur: Standard
Source file: K0050722.ODA

Date	22.07.2005	VSZ KOSICE	SIEMENS AG ISATOOLS
Drawn	LANG		
Appr.			
Norm		Orig./Repl. 1/Repl. by	

Substation control system 6MB
Status indications/system indications/reference time
Table

T = /BM 21
+
-S111
Page

Remarks | Date | Name

Proprietary data, company confidential. All rights reserved.
Confie a titre de secret d'entreprise. Tous droits reservés.
Comunicado como segredo empresarial. Reservados todos os direitos.
Confiado como secreto industrial. Nos reservamos todos los derechos.

The reproduction, transmission or use of this document or its
is not permitted without express written authority.
Offenders will be liable for damages. All rights, including rights
created by patent grant or registration of a utility model or design, are reserved.

Documentation structur: Standard
Source file: KO050722.ODA

Line number	Command derivation	Indication derivation	
33			
34			
35			
36			
37			
38			
39			
40			
41			
42			
43			
44			
45			
46			
47			
48			
49			
50			
51			
52			
53			
54			
55			
56	Alarm 1 (Hupenbefehl)		
57			
58			
59			
60			
61	Alarm 1 (Hupenbefehl)		
62			
63			
64			

Rev.	Remarks	Date	Name	Date	22.07.2005	VSZ KOSICE	SIEMENS AG ISAOOLS	Substation control system 6MB Status indications/system indications/reference time	T = /BM 22
				Drawn	LANG				+
				Appr.					-S111 Page 22
				Norm		Orig./Repl. 1/Repl. by		Table	

Proprietary data, company confidential. All rights reserved.
Confidentiel. Tous droits réservés.
Comunicado como segredo empresarial. Reservados todos os direitos.
Confidencial. Nos reservamos todos los derechos.
The reproduction, transmission or use of this document or its contents is not permitted without express written authority. Offenders will be liable for damages. All rights, including rights created by patent grant or registration of a utility model or design, are reserved.

Line number	Station	Section	Bay	Logical device	Lower limit	Value text	Column section	Column bay	Column logical device	Column information	Column value text	Indication type	Entry in event list	Entry in alarm list	Acknowledge	Display in indication area	Indication class	Entry in SML	Display in diagram	Archive	Operational indications	Protection indications
65	UW KOSICE	GERAETE-STATUSMELDUNGEN	LW1		REFERENZZEIT																	
66	UW KOSICE	GERAETE-STATUSMELDUNGEN	LW2		CHYBA ZAPISU		0	22	0	39		TR	R/C	N				N	N	R	Y	N
67	UW KOSICE	GERAETE-STATUSMELDUNGEN	LW2		DISKETA PLNA		0	22	0	39		TR	O	N				N	N	N		
68	UW KOSICE	GERAETE-STATUSMELDUNGEN	LW2		DISKETA PRAZDNA		0	22	0	39		TR	O	N				N	N	N		
69	UW KOSICE	GERAETE-STATUSMELDUNGEN	LW2		DISKETA ZAPLNENA NA 90%		0	22	0	39		TR	O	N				N	N	N		
70	UW KOSICE	GERAETE-STATUSMELDUNGEN	LW2		PORUCHA	KON ZAC	0	22	0	39	75	SI	R/C	Y	R/C	Y	1	N	N	N		
71	UW KOSICE	GERAETE-STATUSMELDUNGEN	LW2		REFERENZZEIT																	
72	UW KOSICE	GERAETE-STATUSMELDUNGEN	LZG		GA-ENDE-MARKIERUNG							SI	N	N				N	N	N		
73	UW KOSICE	GERAETE-STATUSMELDUNGEN	LZG		LETNI/ZIMNI CAS		0	22	0	39		TR	O	N				N	N	N		
74	UW KOSICE	GERAETE-STATUSMELDUNGEN	LZG		NABEHNUTIE		0	22	0	39		TR	O	N				N	N	N		
75	UW KOSICE	GERAETE-STATUSMELDUNGEN	LZG		NEPLATNY CAS	KON ZAC	0	22	0	39	75	SI	N	N				N	N	R/C	Y	N
76	UW KOSICE	GERAETE-STATUSMELDUNGEN	LZG		NEPRIPRAVENY	KON ZAC	0	22	0	39	75	SI	R/C	Y	R/C	Y	1	N	N	N		
77	UW KOSICE	GERAETE-STATUSMELDUNGEN	LZG		PORUCHA	KON ZAC	0	22	0	39	75	SI	R/C	Y	R/C	Y	1	N	N	N		
78	UW KOSICE	GERAETE-STATUSMELDUNGEN	LZG		PORUCHA CASU	KON ZAC	0	22	0	39	75	SI	N	N				N	N	N		
79	UW KOSICE	GERAETE-STATUSMELDUNGEN	LZG		PRETECENI PAMETI VYSTRAHA		0	22	0	39		TR	O	N				N	N	N		
80	UW KOSICE	GERAETE-STATUSMELDUNGEN	LZG		REFERENZZEIT																	
81	UW KOSICE	GERAETE-STATUSMELDUNGEN	LZG		STATUS PROZESS							SI	N	N				N	N	N		
82	UW KOSICE	GERAETE-STATUSMELDUNGEN	LZG		STATUS STAND BY							SI	N	N				N	N	N		
83	UW KOSICE	GERAETE-STATUSMELDUNGEN	LZG		STATUS TESTBETRIEB							SI	N	N				N	N	N		
84	UW KOSICE	GERAETE-STATUSMELDUNGEN	LZG		SYSTEMOVA HLASENI		0	36					O							N		
85	UW KOSICE	GERAETE-STATUSMELDUNGEN	LZG		VNUTORNA CHYBA	KON ZAC	0	22	0	39	75	SI	R/C	Y	R/C	Y	1	N	N	N		
86	UW KOSICE	GERAETE-STATUSMELDUNGEN	LZG SK-A1		GA-ENDE-MARKIERUNG							SI	N	N				N	N	N		
87	UW KOSICE	GERAETE-STATUSMELDUNGEN	LZG SK-A1		NABEHNUTIE		0	22	0	39		TR	O	N				N	N	N		
88	UW KOSICE	GERAETE-STATUSMELDUNGEN	LZG SK-A1		NEPRIPRAVENY	KON ZAC	0	22	0	39	75	SI	R/C	Y	R/C	Y	1	N	N	N		
89	UW KOSICE	GERAETE-STATUSMELDUNGEN	LZG SK-A1		PORUCHA	KON ZAC	0	22	0	39	75	SI	R/C	N				N	N	N		
90	UW KOSICE	GERAETE-STATUSMELDUNGEN	LZG SK-A1		REFERENZZEIT																	
91	UW KOSICE	GERAETE-STATUSMELDUNGEN	LZG SK-A1		SYSTEMOVA HLASENI		0	36					O							N		
92	UW KOSICE	GERAETE-STATUSMELDUNGEN	LZG SK-A1		VYSIEL.BUF.PREPLNENY		0	22	0	39		TR	O	Y	O	Y	1	N	N	N		
93	UW KOSICE	GERAETE-STATUSMELDUNGEN	LZG SK-A2		GA-ENDE-MARKIERUNG							SI	N	N				N	N	N		
94	UW KOSICE	GERAETE-STATUSMELDUNGEN	LZG SK-A2		NABEHNUTIE		0	22	0	39	0	TR	O	N				N	N	N		
95	UW KOSICE	GERAETE-STATUSMELDUNGEN	LZG SK-A2		NEPRIPRAVENY	KON ZAC	0	22	0	39	75	SI	R/C	Y	R/C	Y	1	N	N	N		
96	UW KOSICE	GERAETE-STATUSMELDUNGEN	LZG SK-A2		PORUCHA	KON ZAC	0	22	0	39	75	SI	R/C	Y	R/C	Y	1	N	N	N		

Documentation structur: Standard
Source file: KO050722.ODA

Date 22.07.2005
Drawn LANG
Appr.
Remarks | Date | Name Norm | Orig./Repl. 1/Repl. by

VSZ KOSICE

SIEMENS AG
SATOOLS

Substation control system 6MB
Status indications/system indications/reference time
Table

T = /BM 23
+

-S111

Page

Proprietary data, company confidential. All rights reserved
Confie a titre de secret d'entreprise. Tous droits réservés.
Comunicado como segredo empresarial. Reservados todos os direitos.
Confiado como secreto industrial. Nos reservamos todos los derechos.

The reproduction, transmission or use of this document or its
is not permitted without express written authority.
Offenders will be liable for damages. All rights, including rights
created by patent grant or registration of a utility model or design, are reserved

Documentation structur: Standard
Source file: KO050722.ODA

Line number	Command derivation	Indication derivation	
65			
66			
67	Alarm 1 (Hupenbefehl)		
68			
69			
70			
71			
72			
73			
74			
75			
76	Alarm 1 (Hupenbefehl)		
77			
78			
79			
80			
81			
82			
83			
84			
85	Alarm 1 (Hupenbefehl)		
86			
87			
88	Alarm 1 (Hupenbefehl)		
89			
90			
91			
92			
93			
94			
95			
96			

Rev.	Remarks	Date	Name	Date	22.07.2005	VSZ KOSICE	SIEMENS AG ISA TOOLS	Substation control system 6MB Status indications/system indications/reference time	T = /BM 24
				Drawn	LANG				+
				Appr.					
				Norm		Orig./Repl. 1/Repl. by		Table	-S111 Page 24

Proprietary data, company confidential. All rights reserved.
Confe a ttre da secret dentreprise. Tous droits r,serv,s.
Comunicado como segredo empresarial. Reservados todos os direitos.
Confiado como secreto industrial. Nos reservamos todos los derechos.

The reproduction, transmission or use of this document or its
is not permitted without expres written authority.
Offenders will be liable for damages. All rights, including rights
created by patent grant or registration of a utility model or design, are reserved.

Documentation structur: Standard
Source file: KO050722.ODA

Line number	Station	Section	Bay	Logical device	Lower limit	Value text	Column section	Column bay	Column logical device	Column information	Column value text	Indication type	Entry in event list	Entry in alarm list	Acknowledge	Display in indication area	Indication class	Entry in SML	Display in diagram	Archive	Operational indications	Protection indications
97	UW KOSICE	GERAETE-STATUSMELDUNGEN	LZG SK-A2		REFERENZZEIT																	
98	UW KOSICE	GERAETE-STATUSMELDUNGEN	LZG SK-A2		SYSTEMOVA HLASENI		0	36	0	40	0		O							N		
99	UW KOSICE	GERAETE-STATUSMELDUNGEN	LZG SK-A2		VYSIEL.BUF.PREPLNENY		0	22	0	39	0	TR	O	N				N	N	N		
100	UW KOSICE	GERAETE-STATUSMELDUNGEN	LZG SK-G1		GA-ENDE-MARKIERUNG							SI	N	N				N	N	N		
101	UW KOSICE	GERAETE-STATUSMELDUNGEN	LZG SK-G1		NABEHNUTIE		0	22	0	39		TR	O	N				N	N	N		
102	UW KOSICE	GERAETE-STATUSMELDUNGEN	LZG SK-G1		NEPRIPRAVENY	KON ZAC	0	22	0	39	75	SI	R/C	Y	R/C	Y	1	N	N	N		
103	UW KOSICE	GERAETE-STATUSMELDUNGEN	LZG SK-G1		PORUCHA	KON ZAC	0	22	0	39	75	SI	R/C	N				N	N	N		
104	UW KOSICE	GERAETE-STATUSMELDUNGEN	LZG SK-G1		REFERENZZEIT																	
105	UW KOSICE	GERAETE-STATUSMELDUNGEN	LZG SK-G1		SYSTEMOVA HLASENI		0	36					O							N		
106	UW KOSICE	GERAETE-STATUSMELDUNGEN	LZG SK-G2		GA-ENDE-MARKIERUNG							SI	N	N				N	N	N		
107	UW KOSICE	GERAETE-STATUSMELDUNGEN	LZG SK-G2		NABEHNUTIE		0	22	0	39		TR	O	N				N	N	N		
108	UW KOSICE	GERAETE-STATUSMELDUNGEN	LZG SK-G2		NEPRIPRAVENY	KON ZAC	0	22	0	39	75	SI	R/C	Y	R/C	Y	1	N	N	N		
109	UW KOSICE	GERAETE-STATUSMELDUNGEN	LZG SK-G2		PORUCHA	KON ZAC	0	22	0	39	75	SI	R/C	N				N	N	N		
110	UW KOSICE	GERAETE-STATUSMELDUNGEN	LZG SK-G2		REFERENZZEIT																	
111	UW KOSICE	GERAETE-STATUSMELDUNGEN	LZG SK-G2		SYSTEMOVA HLASENI		0	36					O							N		
112	UW KOSICE	GERAETE-STATUSMELDUNGEN	MC1		GA-ENDE-MARKIERUNG							SI	N	N				N	N	N		
113	UW KOSICE	GERAETE-STATUSMELDUNGEN	MC1		NABEHNUTIE		0	22	0	39		TR	O	N				N	N	N		
114	UW KOSICE	GERAETE-STATUSMELDUNGEN	MC1		NEPRIPRAVENY	KON ZAC	0	22	0	39	75	SI	R/C	N				N	N	N		
115	UW KOSICE	GERAETE-STATUSMELDUNGEN	MC1		PORUCHA	KON ZAC	0	22	0	39	75	SI	R/C	N				N	N	N		
116	UW KOSICE	GERAETE-STATUSMELDUNGEN	MC1		REFERENZZEIT																	
117	UW KOSICE	GERAETE-STATUSMELDUNGEN	MC1		SYSTEMOVA HLASENI		0	36					O							N		
118	UW KOSICE	GERAETE-STATUSMELDUNGEN	MC1		VYSIEL.BUF.PREPLNENY	KON ZAC	0	22	0	39	75	SI	O	N				N	N	N		
119	UW KOSICE	GERAETE-STATUSMELDUNGEN	R10 K01 7SJ512		GA-ENDE-MARKIERUNG							SI	N	N				N	N	N		
120	UW KOSICE	GERAETE-STATUSMELDUNGEN	R10 K01 7SJ512		NABEHNUTIE		0	22	0	39	0	TR	O	N				N	N	N		
121	UW KOSICE	GERAETE-STATUSMELDUNGEN	R10 K01 7SJ512		NEPRIPRAVENY	KON ZAC	0	22	0	39	75	SI	R/C	Y	R/C	Y	1	N	N	N		
122	UW KOSICE	GERAETE-STATUSMELDUNGEN	R10 K01 7SJ512		PORUCHA	KON ZAC	0	22	0	39	75	SI	R/C	Y	R/C	Y	1	N	N	N		
123	UW KOSICE	GERAETE-STATUSMELDUNGEN	R10 K01 7SJ512		REFERENZZEIT																	
124	UW KOSICE	GERAETE-STATUSMELDUNGEN	R10 K01 EAG		GA-ENDE-MARKIERUNG							SI	N	N				N	N	N		
125	UW KOSICE	GERAETE-STATUSMELDUNGEN	R10 K01 EAG		NABEHNUTIE		0	22	0	39		TR	O	N				N	N	N		
126	UW KOSICE	GERAETE-STATUSMELDUNGEN	R10 K01 EAG		NEPRIPRAVENY	KON ZAC	0	22	0	39	75	SI	R/C	Y	R/C	Y	1	N	N	N		
127	UW KOSICE	GERAETE-STATUSMELDUNGEN	R10 K01 EAG		PORUCHA	KON ZAC	0	22	0	39	75	SI	R/C	N				N	N	N		
128	UW KOSICE	GERAETE-STATUSMELDUNGEN	R10 K01 EAG		REFERENZZEIT																	

Date	22.07.2005	VSZ KOSICE	SIEMENS AG ISAOOLS
Drawn	LANG		
Appr.			
Remarks	Date	Name Norm	Orig./Repl. 1/Repl. by

Substation control system 6MB
Status indications/system indications/reference time
Table

T = /BM 25
+
-S111
Page

Proprietary data, company confidential. All rights reserved.
Confie a titre de secret d'entreprise. Tous droits reservés.
Comunicado como segredo empresarial. Reservados todos os direitos.
Confiado como secreto industrial. Nos reservamos todos los derechos.

The reproduction, transmission or use of this document or its is not permitted without express written authority.
Offenders will be liable for damages. All rights, including rights created by patent grant or registration of a utility model or design, are reserved

Documentation structur: Standard
Source file: KO050722.ODA

Line number	Command derivation	Indication derivation
97		
98		
99		
100		
101		
102	Alarm 1 (Hupenbefehl)	
103		
104		
105		
106		
107		
108	Alarm 1 (Hupenbefehl)	
109		
110		
111		
112		
113		
114		
115		
116		
117		
118		
119		
120		
121		
122		
123		
124		FELDMERKER FUER GAENDE VOM EAG
125		
126	Alarm 1 (Hupenbefehl)	
127		
128		

Rev.	Remarks	Date	Name	Date	22.07.2005	VSZ KOSICE	SIEMENS AG ISA TOOLS	Substation control system 6MB Status indications/system indications/reference time	T = /BM 26
				Drawn	LANG				+
				Appr.					-S111 Page 26
				Norm		Orig./Repl. 1/Repl. by		Table	

Proprietary data, company confidential. All rights reserved.
Confie a être de secret d'entreprise. Tous droits réservés.
Comunicado como segredo empresarial. Reservados todos os direitos.
Confiado como secreto industrial. Nos reservamos todos los derechos.
The reproduction, transmission or use of this document or its contents is not permitted without express written authority. Offenders will be liable for damages. All rights, including rights created by patent grant or registration of a utility model or design, are reserved.

Line number	Station	Section	Bay	Logical device	Lower limit	Value text	Column section	Column bay	Column logical device	Column information	Column value text	Indication type	Entry in event list	Entry in alarm list	Acknowledge	Display in indication area	Indication class	Entry in SML	Display in diagram	Archive	Operational indications	Protection indications
129	UW KOSICE	GERAETE-STATUSMELDUNGEN	R10 K01 EAG		SYSTEMOVA HLASENI		0	36					O							N		
130	UW KOSICE	GERAETE-STATUSMELDUNGEN	R10 K01 EAG		VNUTORNA CHYBA	KON ZAC	0	22	0	39	75	SI	R/C	Y	R/C	Y	1	N	N	N		
131	UW KOSICE	GERAETE-STATUSMELDUNGEN	R10 K01 EAG		VYSIEL.BUF.PREPLNENY		0	22	0	39		TR	O	N				N	N	N		
132	UW KOSICE	GERAETE-STATUSMELDUNGEN	R10 K02 7SJ512		GA-ENDE-MARKIERUNG							SI	N	N				N	N	N		
133	UW KOSICE	GERAETE-STATUSMELDUNGEN	R10 K02 7SJ512		NABEHNUTIE		0	22	0	39	0	TR	O	N				N	N	N		
134	UW KOSICE	GERAETE-STATUSMELDUNGEN	R10 K02 7SJ512		NEPRIPRAVENY	KON ZAC	0	22	0	39	75	SI	R/C	Y	R/C	Y	1	N	N	N		
135	UW KOSICE	GERAETE-STATUSMELDUNGEN	R10 K02 7SJ512		PORUCHA	KON ZAC	0	22	0	39	75	SI	R/C	Y	R/C	Y	1	N	N	N		
136	UW KOSICE	GERAETE-STATUSMELDUNGEN	R10 K02 7SJ512		REFERENZZEIT																	
137	UW KOSICE	GERAETE-STATUSMELDUNGEN	R10 K02 7UT513		GA-ENDE-MARKIERUNG							SI	N	N				N	N	N		
138	UW KOSICE	GERAETE-STATUSMELDUNGEN	R10 K02 7UT513		NABEHNUTIE		0	22	0	39	0	TR	O	N				N	N	N		
139	UW KOSICE	GERAETE-STATUSMELDUNGEN	R10 K02 7UT513		NEPRIPRAVENY	KON ZAC	0	22	0	39	75	SI	R/C	Y	R/C	Y	1	N	N	N		
140	UW KOSICE	GERAETE-STATUSMELDUNGEN	R10 K02 7UT513		PORUCHA	KON ZAC	0	22	0	39	75	SI	R/C	Y	R/C	Y	1	N	N	N		
141	UW KOSICE	GERAETE-STATUSMELDUNGEN	R10 K02 7UT513		REFERENZZEIT																	
142	UW KOSICE	GERAETE-STATUSMELDUNGEN	R10 K02 EAG		GA-ENDE-MARKIERUNG							SI	N	N				N	N	N		
143	UW KOSICE	GERAETE-STATUSMELDUNGEN	R10 K02 EAG		NABEHNUTIE		0	22	0	39		TR	O	N				N	N	N		
144	UW KOSICE	GERAETE-STATUSMELDUNGEN	R10 K02 EAG		NEPRIPRAVENY	KON ZAC	0	22	0	39	75	SI	R/C	Y	R/C	Y	1	N	N	N		
145	UW KOSICE	GERAETE-STATUSMELDUNGEN	R10 K02 EAG		PORUCHA	KON ZAC	0	22	0	39	75	SI	R/C	N				N	N	N		
146	UW KOSICE	GERAETE-STATUSMELDUNGEN	R10 K02 EAG		REFERENZZEIT																	
147	UW KOSICE	GERAETE-STATUSMELDUNGEN	R10 K02 EAG		SYSTEMOVA HLASENI		0	36					O							N		
148	UW KOSICE	GERAETE-STATUSMELDUNGEN	R10 K02 EAG		VNUTORNA CHYBA	KON ZAC	0	22	0	39	75	SI	R/C	Y	R/C	Y	1	N	N	N		
149	UW KOSICE	GERAETE-STATUSMELDUNGEN	R10 K02 EAG		VYSIEL.BUF.PREPLNENY		0	22	0	39		TR	O	N				N	N	N		
150	UW KOSICE	GERAETE-STATUSMELDUNGEN	R110 EA01 EAG/1		GA-ENDE-MARKIERUNG							SI	N	N				N	N	N		
151	UW KOSICE	GERAETE-STATUSMELDUNGEN	R110 EA01 EAG/1		NABEHNUTIE		0	22	0	39		TR	O	N				N	N	N		
152	UW KOSICE	GERAETE-STATUSMELDUNGEN	R110 EA01 EAG/1		NEPRIPRAVENY	KON ZAC	0	22	0	39	75	SI	R/C	Y	R/C	Y	1	N	N	N		
153	UW KOSICE	GERAETE-STATUSMELDUNGEN	R110 EA01 EAG/1		PORUCHA	KON ZAC	0	22	0	39	75	SI	R/C	N				N	N	N		
154	UW KOSICE	GERAETE-STATUSMELDUNGEN	R110 EA01 EAG/1		REFERENZZEIT																	
155	UW KOSICE	GERAETE-STATUSMELDUNGEN	R110 EA01 EAG/1		SYSTEMOVA HLASENI		0	36					O							N		
156	UW KOSICE	GERAETE-STATUSMELDUNGEN	R110 EA01 EAG/1		VNUTORNA CHYBA	KON ZAC	0	22	0	39	75	SI	R/C	Y	R/C	Y	1	N	N	N		
157	UW KOSICE	GERAETE-STATUSMELDUNGEN	R110 EA01 EAG/1		VYSIEL.BUF.PREPLNENY		0	22	0	39		TR	O	N				N	N	N		
158	UW KOSICE	GERAETE-STATUSMELDUNGEN	R110 EA01 EAG/2		GA-ENDE-MARKIERUNG							SI	N	N				N	N	N		
159	UW KOSICE	GERAETE-STATUSMELDUNGEN	R110 EA01 EAG/2		NABEHNUTIE		0	22	0	39	0	TR	O	N				N	N	N		
160	UW KOSICE	GERAETE-STATUSMELDUNGEN	R110 EA01 EAG/2		NEPRIPRAVENY	KON ZAC	0	22	0	39	75	SI	R/C	Y	R/C	Y	1	N	N	N		

Proprietary data, company confidential. All rights reserved
Confia a tifre de secret d'entreprise. Tous droits reservs.
Comunicado como segredo empresarial. Reservados todos os direitos.
Confiado como secreto industrial. Nos reservamos todos los derechos.

The reproduction, transmission or use of this document or its
is not permitted without expres written authority.
Offenders will be liable for damages. All rights, including rights
created by patent grant or registration of a utility model or design, are reserved

Documentation structur: Standard
Source file: KO050722.ODA

Line number	Command derivation	Indication derivation
129		
130	Alarm 1 (Hupenbefehl)	
131		
132		
133		
134		
135		
136		
137		
138		
139		
140		
141		
142		FELDMERKER FUER GAENDE VOM EAG
143		
144	Alarm 1 (Hupenbefehl)	
145		
146		
147		
148	Alarm 1 (Hupenbefehl)	
149		
150		FELDMERKER FUER GAENDE VOM EAG
151		
152	Alarm 1 (Hupenbefehl)	
153		
154		
155		
156	Alarm 1 (Hupenbefehl)	
157		
158		
159		
160		

Proprietary data, company confidential. All rights reserved
Confia a tre da secret d'entreprise. Tous droits réservés.
Comunicado como segredo da empresa. Todos os direitos.
Comunicado como secreto industrial. Nos reservamos todos los derechos.
The reproduction, transmission or use of this document or its
is not permitted without expres written authority.
Offenders will be liable for damages. All rights, including rights
created by patent grant or registration of a utility model or design, are reserved

Line number	Station	Section	Bay	Logical device	Lower limit	Value text	Column section	Column bay	Column logical device	Column information	Column value text	Indication type	Entry in event list	Entry in alarm list	Acknowledge	Display in indication area	Indication class	Entry in SML	Display in diagram	Archive	Operational indications	Protection indications
161	UW KOSICE	GERAETE-STATUSMELDUNGEN	R110 EA01 EAG/2		PORUCHA	KON ZAC	0	22	0	39	75	SI	R/C	Y	R/C	Y	1	N	N	N		
162	UW KOSICE	GERAETE-STATUSMELDUNGEN	R110 EA01 EAG/2		REFERENZZEIT																	
163	UW KOSICE	GERAETE-STATUSMELDUNGEN	R110 EA01 EAG/2		SYSTEMOVA HLASENI		0	36	0	40	0		O							N		
164	UW KOSICE	GERAETE-STATUSMELDUNGEN	R110 EA01 EAG/2		VNUTORNA CHYBA	KON ZAC	0	22	0	39	75	SI	R/C	N				N	N	N		
165	UW KOSICE	GERAETE-STATUSMELDUNGEN	R110 EA01 EAG/2		VYSIEL.BUF.PREPLNENY		0	22	0	39	0	TR	O	N				N	N	N		
166	UW KOSICE	GERAETE-STATUSMELDUNGEN	R110 EA01 EAG/3		GA-ENDE-MARKIERUNG							SI	N	N				N	N	N		
167	UW KOSICE	GERAETE-STATUSMELDUNGEN	R110 EA01 EAG/3		NABEHNUTIE		0	22	0	39		TR	O	N				N	N	N		
168	UW KOSICE	GERAETE-STATUSMELDUNGEN	R110 EA01 EAG/3		NEPRIPRAVENY	KON ZAC	0	22	0	39	75	SI	R/C	Y	R/C	Y	1	N	N	N		
169	UW KOSICE	GERAETE-STATUSMELDUNGEN	R110 EA01 EAG/3		PORUCHA	KON ZAC	0	22	0	39	75	SI	R/C	N				N	N	N		
170	UW KOSICE	GERAETE-STATUSMELDUNGEN	R110 EA01 EAG/3		REFERENZZEIT																	
171	UW KOSICE	GERAETE-STATUSMELDUNGEN	R110 EA01 EAG/3		SYSTEMOVA HLASENI		0	36					O							N		
172	UW KOSICE	GERAETE-STATUSMELDUNGEN	R110 EA01 EAG/3		VNUTORNA CHYBA	KON ZAC	0	22	0	39	75	SI	R/C	Y	R/C	Y	1	N	N	N		
173	UW KOSICE	GERAETE-STATUSMELDUNGEN	R110 EA01 EAG/3		VYSIEL.BUF.PREPLNENY		0	22	0	39		TR	O	N				N	N	N		
174	UW KOSICE	GERAETE-STATUSMELDUNGEN	R110 EA01 SY		NABEHNUTIE		0	22	0	39		TR	O	N				N	N	N		
175	UW KOSICE	GERAETE-STATUSMELDUNGEN	R110 EA01 SY		PORUCHA	KON ZAC	0	22	0	39	75	SI	R/C	N				N	N	N		
176	UW KOSICE	GERAETE-STATUSMELDUNGEN	R110 EA01 SY		REFERENZZEIT																	
177	UW KOSICE	GERAETE-STATUSMELDUNGEN	R110 EA01 SY		SYSTEMOVA HLASENI		0	36					O							N		
178	UW KOSICE	GERAETE-STATUSMELDUNGEN	R110 EA02 7SD502		GA-ENDE-MARKIERUNG							SI	N	N				N	N	N		
179	UW KOSICE	GERAETE-STATUSMELDUNGEN	R110 EA02 7SD502		NABEHNUTIE		0	22	0	39	0	TR	O	N				N	N	N		
180	UW KOSICE	GERAETE-STATUSMELDUNGEN	R110 EA02 7SD502		NEPRIPRAVENY	KON ZAC	0	22	0	39	75	SI	R/C	Y	R/C	Y	1	N	N	N		
181	UW KOSICE	GERAETE-STATUSMELDUNGEN	R110 EA02 7SD502		PORUCHA	KON ZAC	0	22	0	39	75	SI	R/C	Y	R/C	Y	1	N	N	N		
182	UW KOSICE	GERAETE-STATUSMELDUNGEN	R110 EA02 7SD502		REFERENZZEIT																	
183	UW KOSICE	GERAETE-STATUSMELDUNGEN	R110 EA02 7SJ512		GA-ENDE-MARKIERUNG							SI	N	N				N	N	N		
184	UW KOSICE	GERAETE-STATUSMELDUNGEN	R110 EA02 7SJ512		NABEHNUTIE		0	22	0	39	0	TR	O	N				N	N	N		
185	UW KOSICE	GERAETE-STATUSMELDUNGEN	R110 EA02 7SJ512		NEPRIPRAVENY	KON ZAC	0	22	0	39	75	SI	R/C	Y	R/C	Y	1	N	N	N		
186	UW KOSICE	GERAETE-STATUSMELDUNGEN	R110 EA02 7SJ512		PORUCHA	KON ZAC	0	22	0	39	75	SI	R/C	Y	R/C	Y	1	N	N	N		
187	UW KOSICE	GERAETE-STATUSMELDUNGEN	R110 EA02 7SJ512		REFERENZZEIT																	
188	UW KOSICE	GERAETE-STATUSMELDUNGEN	R110 EA02 EAG		GA-ENDE-MARKIERUNG							SI	N	N				N	N	N		
189	UW KOSICE	GERAETE-STATUSMELDUNGEN	R110 EA02 EAG		NABEHNUTIE		0	22	0	39		TR	O	N				N	N	N		
190	UW KOSICE	GERAETE-STATUSMELDUNGEN	R110 EA02 EAG		NEPRIPRAVENY	KON ZAC	0	22	0	39	75	SI	R/C	Y	R/C	Y	1	N	N	N		
191	UW KOSICE	GERAETE-STATUSMELDUNGEN	R110 EA02 EAG		PORUCHA	KON ZAC	0	22	0	39	75	SI	R/C	N				N	N	N		
192	UW KOSICE	GERAETE-STATUSMELDUNGEN	R110 EA02 EAG		REFERENZZEIT																	

Documentation structur: Standard
Source file: K050722.ODA

Date	22.07.2005	VSZ KOSICE	SIEMENS AG ISAOOLS
Drawn	LANG		
Appr.			
Norm			
Remarks	Date	Name	Orig./Repl. 1/Repl. by

Substation control system 6MB
Status indications/system indications/reference time
Table

T = /BM 29
+
-S111
Page

Proprietary data, company confidential. All rights reserved.
Confie a titre de secret d'entreprise. Tous droits reservés.
Comunicado como segredo empresarial. Reservados todos os direitos.
Confiado como secreto industrial. Nos reservamos todos los derechos.

The reproduction, transmission or use of this document or its
is not permitted without express written authority.
Offenders will be liable for damages. All rights, including rights
created by patent grant or registration of a utility model or design, are reserved.

Documentation structur: Standard
Source file: KO050722.ODA

Line number	Command derivation	Indication derivation
161		
162		
163		
164		
165		
166		FELDMERKER FUER GAENDE VOM EAG
167		
168	Alarm 1 (Hupenbefehl)	
169		
170		
171		
172	Alarm 1 (Hupenbefehl)	
173		
174		
175	Alarm 1 (Hupenbefehl)	
176		
177		
178		
179		
180		
181		
182		
183		
184		
185		
186		
187		
188		FELDMERKER FUER GAENDE VOM EAG
189		
190	Alarm 1 (Hupenbefehl)	
191		
192		

Rev.	Remarks	Date	Name	Date	22.07.2005	VSZ KOSICE	SIEMENS AG ISAIOOLS	Substation control system 6MB Status indications/system indications/reference time	T = /BM 30
				Drawn	LANG				+
				Appr.					-S111 Page 30
				Norm		Orig./Repl. 1/Repl. by		Table	

Proprietary data, company confidential. All rights reserved
Confie a titre de secret d'entreprise. Tous droits reservs.
Comunicado como secreto empresarial. Reservados todos os direitos.
Confiado como secreto industrial. Nos reservamos todos los derechos.

The reproduction, transmission or use of this document or its contents is not permitted without expres written authority. Offenders will be liable for damages. All rights, including rights created by patent grant or registration of a utility model or design, are reserved.

Line number	Station	Section	Bay	Logical device	Lower limit	Value text	Column section	Column bay	Column logical device	Column information	Column value text	Indication type	Entry in event list	Entry in alarm list	Acknowledge	Display in indication area	Indication class	Entry in SML	Display in diagram	Archive	Operational indications	Protection indications
193	UW KOSICE	GERAETE-STATUSMELDUNGEN	R110 EA02 EAG		SYSTEMOVA HLASENI		0	36					O							N		
194	UW KOSICE	GERAETE-STATUSMELDUNGEN	R110 EA02 EAG		VNUTORNA CHYBA	KON ZAC	0	22	0	39	75	SI	R/C	Y	R/C	Y	1	N	N	N		
195	UW KOSICE	GERAETE-STATUSMELDUNGEN	R110 EA02 EAG		VYSIEL.BUF.PREPLNENY		0	22	0	39		TR	O	N				N	N	N		
196	UW KOSICE	GERAETE-STATUSMELDUNGEN	R110 EA03 7SJ512		GA-ENDE-MARKIERUNG							SI	N	N				N	N	N		
197	UW KOSICE	GERAETE-STATUSMELDUNGEN	R110 EA03 7SJ512		NABEHNUTIE		0	22	0	39	0	TR	O	N				N	N	N		
198	UW KOSICE	GERAETE-STATUSMELDUNGEN	R110 EA03 7SJ512		NEPRIPRAVENY	KON ZAC	0	22	0	39	75	SI	R/C	Y	R/C	Y	1	N	N	N		
199	UW KOSICE	GERAETE-STATUSMELDUNGEN	R110 EA03 7SJ512		PORUCHA	KON ZAC	0	22	0	39	75	SI	R/C	Y	R/C	Y	1	N	N	N		
200	UW KOSICE	GERAETE-STATUSMELDUNGEN	R110 EA03 7SJ512		REFERENZZEIT																	
201	UW KOSICE	GERAETE-STATUSMELDUNGEN	R110 EA03 EAG		GA-ENDE-MARKIERUNG							SI	N	N				N	N	N		
202	UW KOSICE	GERAETE-STATUSMELDUNGEN	R110 EA03 EAG		NABEHNUTIE		0	22	0	39		TR	O	N				N	N	N		
203	UW KOSICE	GERAETE-STATUSMELDUNGEN	R110 EA03 EAG		NEPRIPRAVENY	KON ZAC	0	22	0	39	75	SI	R/C	Y	R/C	Y	1	N	N	N		
204	UW KOSICE	GERAETE-STATUSMELDUNGEN	R110 EA03 EAG		PORUCHA	KON ZAC	0	22	0	39	75	SI	R/C	N				N	N	N		
205	UW KOSICE	GERAETE-STATUSMELDUNGEN	R110 EA03 EAG		REFERENZZEIT																	
206	UW KOSICE	GERAETE-STATUSMELDUNGEN	R110 EA03 EAG		SYSTEMOVA HLASENI		0	36					O							N		
207	UW KOSICE	GERAETE-STATUSMELDUNGEN	R110 EA03 EAG		VNUTORNA CHYBA	KON ZAC	0	22	0	39	75	SI	R/C	Y	R/C	Y	1	N	N	N		
208	UW KOSICE	GERAETE-STATUSMELDUNGEN	R110 EA03 EAG		VYSIEL.BUF.PREPLNENY		0	22	0	39		TR	O	N				N	N	N		
209	UW KOSICE	GERAETE-STATUSMELDUNGEN	R110 EA04 7SD502		GA-ENDE-MARKIERUNG							SI	N	N				N	N	N		
210	UW KOSICE	GERAETE-STATUSMELDUNGEN	R110 EA04 7SD502		NABEHNUTIE		0	22	0	39	0	TR	O	N				N	N	N		
211	UW KOSICE	GERAETE-STATUSMELDUNGEN	R110 EA04 7SD502		NEPRIPRAVENY	KON ZAC	0	22	0	39	75	SI	R/C	Y	R/C	Y	1	N	N	N		
212	UW KOSICE	GERAETE-STATUSMELDUNGEN	R110 EA04 7SD502		PORUCHA	KON ZAC	0	22	0	39	75	SI	R/C	Y	R/C	Y	1	N	N	N		
213	UW KOSICE	GERAETE-STATUSMELDUNGEN	R110 EA04 7SD502		REFERENZZEIT																	
214	UW KOSICE	GERAETE-STATUSMELDUNGEN	R110 EA04 7SJ512		GA-ENDE-MARKIERUNG							SI	N	N				N	N	N		
215	UW KOSICE	GERAETE-STATUSMELDUNGEN	R110 EA04 7SJ512		NABEHNUTIE		0	22	0	39	0	TR	O	N				N	N	N		
216	UW KOSICE	GERAETE-STATUSMELDUNGEN	R110 EA04 7SJ512		NEPRIPRAVENY	KON ZAC	0	22	0	39	75	SI	R/C	Y	R/C	Y	1	N	N	N		
217	UW KOSICE	GERAETE-STATUSMELDUNGEN	R110 EA04 7SJ512		PORUCHA	KON ZAC	0	22	0	39	75	SI	R/C	Y	R/C	Y	1	N	N	N		
218	UW KOSICE	GERAETE-STATUSMELDUNGEN	R110 EA04 7SJ512		REFERENZZEIT																	
219	UW KOSICE	GERAETE-STATUSMELDUNGEN	R110 EA04 EAG		GA-ENDE-MARKIERUNG							SI	N	N				N	N	N		
220	UW KOSICE	GERAETE-STATUSMELDUNGEN	R110 EA04 EAG		NABEHNUTIE		0	22	0	39		TR	O	N				N	N	N		
221	UW KOSICE	GERAETE-STATUSMELDUNGEN	R110 EA04 EAG		NEPRIPRAVENY	KON ZAC	0	22	0	39	75	SI	R/C	Y	R/C	Y	1	N	N	N		
222	UW KOSICE	GERAETE-STATUSMELDUNGEN	R110 EA04 EAG		PORUCHA	KON ZAC	0	22	0	39	75	SI	R/C	N				N	N	N		
223	UW KOSICE	GERAETE-STATUSMELDUNGEN	R110 EA04 EAG		REFERENZZEIT																	
224	UW KOSICE	GERAETE-STATUSMELDUNGEN	R110 EA04 EAG		SYSTEMOVA HLASENI		0	36					O							N		

Documentation structur: Standard
Source file: KO050722.ODA

Date	22.07.2005	VSZ KOSICE	SIEMENS AG ISAOOLS
Drawn	LANG		
Appr.			
Norm		Orig./Repl. 1/Repl. by	

Substation control system 6MB
Status indications/system indications/reference time
Table

T = /BM 31
+
-S111
Page

R Remarks Date Name

Proprietary data, company confidential. All rights reserved.
Confie a titre de secret dentreprise. Tous droits reservis.
Comunicado como segredo empresarial. Reservados todos os direitos.
Confiado como secreto industrial. Nos reservamos todos los derechos.

The reproduction, transmission or use of this document or its
is not permited without expres written authority.
Offenders will be liable for damages. All rights, including rights
created by patent grant or registration of a utility model or design, are reserved

Documentation structur: Standard
Source file: KO050722.ODA

Line number	Command derivation	Indication derivation
193		
194	Alarm 1 (Hupenbefehl)	
195		
196		
197		
198		
199		
200		
201		FELDMERKER FUER GAENDE VOM EAG
202		
203	Alarm 1 (Hupenbefehl)	
204		
205		
206		
207	Alarm 1 (Hupenbefehl)	
208		
209		
210		
211		
212		
213		
214		
215		
216		
217		
218		
219		FELDMERKER FUER GAENDE VOM EAG
220		
221	Alarm 1 (Hupenbefehl)	
222		
223		
224		

Line number	Station	Section	Bay	Logical device	Lower limit	Value text	Column section	Column bay	Column logical device	Column information	Column value text	Indication type	Entry in event list	Entry in alarm list	Acknowledge	Display in indication area	Indication class	Entry in SML	Display in diagram	Archive	Operational indications	Protection indications
225	UW KOSICE	GERAETE-STATUSMELDUNGEN	R110 EA04 EAG		VNUTORNA CHYBA	KON ZAC	0	22	0	39	75	SI	R/C	Y	R/C	Y	1	N	N	N		
226	UW KOSICE	GERAETE-STATUSMELDUNGEN	R110 EA04 EAG		VYSIEL.BUF.PREPLNENY		0	22	0	39		TR	O	N				N	N	N		
227	UW KOSICE	GERAETE-STATUSMELDUNGEN	R110 EA05 7SJ511		GA-ENDE-MARKIERUNG							SI	N	N				N	N	N		
228	UW KOSICE	GERAETE-STATUSMELDUNGEN	R110 EA05 7SJ511		NABEHNUTIE		0	22	0	39	0	TR	O	N				N	N	N		
229	UW KOSICE	GERAETE-STATUSMELDUNGEN	R110 EA05 7SJ511		NEPRIPRAVENY	KON ZAC	0	22	0	39	75	SI	R/C	Y	R/C	Y	1	N	N	N		
230	UW KOSICE	GERAETE-STATUSMELDUNGEN	R110 EA05 7SJ511		PORUCHA	KON ZAC	0	22	0	39	75	SI	R/C	Y	R/C	Y	1	N	N	N		
231	UW KOSICE	GERAETE-STATUSMELDUNGEN	R110 EA05 7SJ511		REFERENZZEIT																	
232	UW KOSICE	GERAETE-STATUSMELDUNGEN	R110 EA05 EAG		GA-ENDE-MARKIERUNG							SI	N	N				N	N	N		
233	UW KOSICE	GERAETE-STATUSMELDUNGEN	R110 EA05 EAG		NABEHNUTIE		0	22	0	39		TR	O	N				N	N	N		
234	UW KOSICE	GERAETE-STATUSMELDUNGEN	R110 EA05 EAG		NEPRIPRAVENY	KON ZAC	0	22	0	39	75	SI	R/C	Y	R/C	Y	1	N	N	N		
235	UW KOSICE	GERAETE-STATUSMELDUNGEN	R110 EA05 EAG		PORUCHA	KON ZAC	0	22	0	39	75	SI	R/C	N				N	N	N		
236	UW KOSICE	GERAETE-STATUSMELDUNGEN	R110 EA05 EAG		REFERENZZEIT																	
237	UW KOSICE	GERAETE-STATUSMELDUNGEN	R110 EA05 EAG		SYSTEMOVA HLASENI		0	36					O							N		
238	UW KOSICE	GERAETE-STATUSMELDUNGEN	R110 EA05 EAG		VNUTORNA CHYBA	KON ZAC	0	22	0	39	75	SI	R/C	Y	R/C	Y	1	N	N	N		
239	UW KOSICE	GERAETE-STATUSMELDUNGEN	R110 EA05 EAG		VYSIEL.BUF.PREPLNENY		0	22	0	39		TR	O	N				N	N	N		
240	UW KOSICE	GERAETE-STATUSMELDUNGEN	R110 EA06 7SJ512		GA-ENDE-MARKIERUNG							SI	N	N				N	N	N		
241	UW KOSICE	GERAETE-STATUSMELDUNGEN	R110 EA06 7SJ512		NABEHNUTIE		0	22	0	39	0	TR	O	N				N	N	N		
242	UW KOSICE	GERAETE-STATUSMELDUNGEN	R110 EA06 7SJ512		NEPRIPRAVENY	KON ZAC	0	22	0	39	75	SI	R/C	Y	R/C	Y	1	N	N	N		
243	UW KOSICE	GERAETE-STATUSMELDUNGEN	R110 EA06 7SJ512		PORUCHA	KON ZAC	0	22	0	39	75	SI	R/C	Y	R/C	Y	1	N	N	N		
244	UW KOSICE	GERAETE-STATUSMELDUNGEN	R110 EA06 7SJ512		REFERENZZEIT																	
245	UW KOSICE	GERAETE-STATUSMELDUNGEN	R110 EA06 7UT512		GA-ENDE-MARKIERUNG							SI	N	N				N	N	N		
246	UW KOSICE	GERAETE-STATUSMELDUNGEN	R110 EA06 7UT512		NABEHNUTIE		0	22	0	39	0	TR	O	N				N	N	N		
247	UW KOSICE	GERAETE-STATUSMELDUNGEN	R110 EA06 7UT512		NEPRIPRAVENY	KON ZAC	0	22	0	39	75	SI	R/C	Y	R/C	Y	1	N	N	N		
248	UW KOSICE	GERAETE-STATUSMELDUNGEN	R110 EA06 7UT512		PORUCHA	KON ZAC	0	22	0	39	75	SI	R/C	Y	R/C	Y	1	N	N	N		
249	UW KOSICE	GERAETE-STATUSMELDUNGEN	R110 EA06 7UT512		REFERENZZEIT																	
250	UW KOSICE	GERAETE-STATUSMELDUNGEN	R110 EA06 EAG		GA-ENDE-MARKIERUNG							SI	N	N				N	N	N		
251	UW KOSICE	GERAETE-STATUSMELDUNGEN	R110 EA06 EAG		NABEHNUTIE		0	22	0	39		TR	O	N				N	N	N		
252	UW KOSICE	GERAETE-STATUSMELDUNGEN	R110 EA06 EAG		NEPRIPRAVENY	KON ZAC	0	22	0	39	75	SI	R/C	Y	R/C	Y	1	N	N	N		
253	UW KOSICE	GERAETE-STATUSMELDUNGEN	R110 EA06 EAG		PORUCHA	KON ZAC	0	22	0	39	75	SI	R/C	N				N	N	N		
254	UW KOSICE	GERAETE-STATUSMELDUNGEN	R110 EA06 EAG		REFERENZZEIT																	
255	UW KOSICE	GERAETE-STATUSMELDUNGEN	R110 EA06 EAG		SYSTEMOVA HLASENI		0	36					O							N		
256	UW KOSICE	GERAETE-STATUSMELDUNGEN	R110 EA06 EAG		VNUTORNA CHYBA	KON ZAC	0	22	0	39	75	SI	R/C	Y	R/C	Y	1	N	N	N		

Proprietary data, company confidential. All rights reserved.
Confia a tire da secret dentreprise. Tous droits reservs.
Comunicado como segredo empresarial. Reservados todos os direitos.
Confiado como secreto industrial. Nos reservamos todos los derechos.
The reproduction, transmission or use of this document or its contents is not permitted without express written authority. Offenders will be liable for damages. All rights, including rights created by patent grant or registration of a utility model or design, are reserved.

Documentation structure: Standard
Source file: KO050722.ODA

Date	22.07.2005	VSZ KOSICE	SIEMENS AG ISAOOLS
Drawn	LANG		
Appr.			
Remarks	Date	Name Norm	Orig./Repl. 1/Repl. by

Substation control system 6MB
Status indications/system indications/reference time
Table

T = /BM 33
+
-S111
Page

Proprietary data, company confidential. All rights reserved.
Confie a titre de secret d'entreprise. Tous droits r,serv,s.
Comunicado como segredo empresarial. Reservados todos os direitos.
Confiado como secreto industrial. Nos reservamos todos los derechos.

The reproduction, transmission or use of this document or its
is not permitted without expres written authority.
Offenders will be liable for damages. All rights, including rights
created by patent grant or registration of a utility model or design, are reserved

Documentation structur: Standard
Source file: KO050722.ODA

Line number	Command derivation	Indication derivation
225	Alarm 1 (Hupenbefehl)	
226		
227		
228		
229		
230		
231		
232		FELDMERKER FUER GAENDE VOM EAG
233		
234	Alarm 1 (Hupenbefehl)	
235		
236		
237		
238	Alarm 1 (Hupenbefehl)	
239		
240		
241		
242		
243		
244		
245		
246		
247		
248		
249		
250		FELDMERKER FUER GAENDE VOM EAG
251		
252	Alarm 1 (Hupenbefehl)	
253		
254		
255		
256	Alarm 1 (Hupenbefehl)	

Proprietary data, company confidential. All rights reserved
Confia a tire de secret d'entreprise. Tous droits r s erv s
Comunicado como segredo empresarial. Reservados todos os direitos
Confiado como secreto industrial. Nos reservamos todos los derechos.

The reproduction, transmission or use of this document or its contents is not permitted without express written authority. Offenders will be liable for damages. All rights, including rights created by patent grant or registration of a utility model or design, are reserved

Line number	Station	Section	Bay	Logical device	Lower limit	Value text	Column section	Column bay	Column logical device	Column information	Column value text	Indication type	Entry in event list	Entry in alarm list	Acknowledge	Display in indication area	Indication class	Entry in SML	Display in diagram	Archive	Operational indications	Protection indications
257	UW KOSICE	GERAETE-STATUSMELDUNGEN	R110 EA06 EAG		VYSIEL.BUF.PREPLNENY		0	22	0	39		TR	O	N				N	N	N		
258	UW KOSICE	GERAETE-STATUSMELDUNGEN	R110 EA07 7SJ512		GA-ENDE-MARKIERUNG							SI	N	N				N	N	N		
259	UW KOSICE	GERAETE-STATUSMELDUNGEN	R110 EA07 7SJ512		NABEHNUTIE		0	22	0	39	0	TR	O	N				N	N	N		
260	UW KOSICE	GERAETE-STATUSMELDUNGEN	R110 EA07 7SJ512		NEPRIPRAVENY	KON ZAC	0	22	0	39	75	SI	R/C	Y	R/C	Y	1	N	N	N		
261	UW KOSICE	GERAETE-STATUSMELDUNGEN	R110 EA07 7SJ512		PORUCHA	KON ZAC	0	22	0	39	75	SI	R/C	Y	R/C	Y	1	N	N	N		
262	UW KOSICE	GERAETE-STATUSMELDUNGEN	R110 EA07 7SJ512		REFERENZZEIT																	
263	UW KOSICE	GERAETE-STATUSMELDUNGEN	R110 EA07 EAG		GA-ENDE-MARKIERUNG							SI	N	N				N	N	N		
264	UW KOSICE	GERAETE-STATUSMELDUNGEN	R110 EA07 EAG		NABEHNUTIE		0	22	0	39		TR	O	N				N	N	N		
265	UW KOSICE	GERAETE-STATUSMELDUNGEN	R110 EA07 EAG		NEPRIPRAVENY	KON ZAC	0	22	0	39	75	SI	R/C	Y	R/C	Y	1	N	N	N		
266	UW KOSICE	GERAETE-STATUSMELDUNGEN	R110 EA07 EAG		PORUCHA	KON ZAC	0	22	0	39	75	SI	R/C	N				N	N	N		
267	UW KOSICE	GERAETE-STATUSMELDUNGEN	R110 EA07 EAG		REFERENZZEIT																	
268	UW KOSICE	GERAETE-STATUSMELDUNGEN	R110 EA07 EAG		SYSTEMOVA HLASENI		0	36					O							N		
269	UW KOSICE	GERAETE-STATUSMELDUNGEN	R110 EA07 EAG		VNUTORNA CHYBA	KON ZAC	0	22	0	39	75	SI	R/C	Y	R/C	Y	1	N	N	N		
270	UW KOSICE	GERAETE-STATUSMELDUNGEN	R110 EA07 EAG		VYSIEL.BUF.PREPLNENY		0	22	0	39		TR	O	N				N	N	N		
271	UW KOSICE	GERAETE-STATUSMELDUNGEN	R110 EA08 7SJ512		GA-ENDE-MARKIERUNG							SI	N	N				N	N	N		
272	UW KOSICE	GERAETE-STATUSMELDUNGEN	R110 EA08 7SJ512		NABEHNUTIE		0	22	0	39	0	TR	O	N				N	N	N		
273	UW KOSICE	GERAETE-STATUSMELDUNGEN	R110 EA08 7SJ512		NEPRIPRAVENY	KON ZAC	0	22	0	39	75	SI	R/C	Y	R/C	Y	1	N	N	N		
274	UW KOSICE	GERAETE-STATUSMELDUNGEN	R110 EA08 7SJ512		PORUCHA	KON ZAC	0	22	0	39	75	SI	R/C	Y	R/C	Y	1	N	N	N		
275	UW KOSICE	GERAETE-STATUSMELDUNGEN	R110 EA08 7SJ512		REFERENZZEIT																	
276	UW KOSICE	GERAETE-STATUSMELDUNGEN	R110 EA08 7UT512		GA-ENDE-MARKIERUNG							SI	N	N				N	N	N		
277	UW KOSICE	GERAETE-STATUSMELDUNGEN	R110 EA08 7UT512		NABEHNUTIE		0	22	0	39	0	TR	O	N				N	N	N		
278	UW KOSICE	GERAETE-STATUSMELDUNGEN	R110 EA08 7UT512		NEPRIPRAVENY	KON ZAC	0	22	0	39	75	SI	R/C	Y	R/C	Y	1	N	N	N		
279	UW KOSICE	GERAETE-STATUSMELDUNGEN	R110 EA08 7UT512		PORUCHA	KON ZAC	0	22	0	39	75	SI	R/C	Y	R/C	Y	1	N	N	N		
280	UW KOSICE	GERAETE-STATUSMELDUNGEN	R110 EA08 7UT512		REFERENZZEIT																	
281	UW KOSICE	GERAETE-STATUSMELDUNGEN	R110 EA08 EAG		GA-ENDE-MARKIERUNG							SI	N	N				N	N	N		
282	UW KOSICE	GERAETE-STATUSMELDUNGEN	R110 EA08 EAG		NABEHNUTIE		0	22	0	39		TR	O	N				N	N	N		
283	UW KOSICE	GERAETE-STATUSMELDUNGEN	R110 EA08 EAG		NEPRIPRAVENY	KON ZAC	0	22	0	39	75	SI	R/C	Y	R/C	Y	1	N	N	N		
284	UW KOSICE	GERAETE-STATUSMELDUNGEN	R110 EA08 EAG		PORUCHA	KON ZAC	0	22	0	39	75	SI	R/C	N				N	N	N		
285	UW KOSICE	GERAETE-STATUSMELDUNGEN	R110 EA08 EAG		REFERENZZEIT																	
286	UW KOSICE	GERAETE-STATUSMELDUNGEN	R110 EA08 EAG		SYSTEMOVA HLASENI		0	36					O							N		
287	UW KOSICE	GERAETE-STATUSMELDUNGEN	R110 EA08 EAG		VNUTORNA CHYBA	KON ZAC	0	22	0	39	75	SI	R/C	Y	R/C	Y	1	N	N	N		
288	UW KOSICE	GERAETE-STATUSMELDUNGEN	R110 EA08 EAG		VYSIEL.BUF.PREPLNENY		0	22	0	39		TR	O	N				N	N	N		

Proprietary data, company confidential. All rights reserved.
Confie a titre de secret d'entreprise. Tous droits réservés.
Comunicado como segredo empresarial. Reservados todos os direitos.
Confiado como secreto industrial. Nos reservamos todos los derechos.

The reproduction, transmission or use of this document or its
is not permitted without express written authority.
Offenders will be liable for damages. All rights, including rights
created by patent grant or registration of a utility model or design, are reserved.

Documentation structur: Standard
Source file: KO050722.ODA

Line number	Command derivation	Indication derivation
257		
258		
259		
260		
261		
262		
263		FELDMERKER FUER GAENDE VOM EAG
264		
265	Alarm 1 (Hupenbefehl)	
266		
267		
268		
269	Alarm 1 (Hupenbefehl)	
270		
271		
272		
273		
274		
275		
276		
277		
278		
279		
280		
281		FELDMERKER FUER GAENDE VOM EAG
282		
283	Alarm 1 (Hupenbefehl)	
284		
285		
286		
287	Alarm 1 (Hupenbefehl)	
288		

Proprietary data, company confidential. All rights reserved.
Confia a ltrta da secret dentreprise. Tous droits reservs.
Comunicado como segredo empresarial. Reservados todos os direitos.
Confiado como secreto industrial. Nos reservamos todos los derechos.

The reproduction, transmission or use of this document or its contents is not permitted without express written authority. Offenders will be liable for damages. All rights, including rights created by patent grant or registration of a utility model or design, are reserved.

Line number	Station	Section	Bay	Logical device	Lower limit	Value text	Column section	Column bay	Column logical device	Column information	Column value text	Indication type	Entry in event list	Entry in alarm list	Acknowledge	Display in indication area	Indication class	Entry in SML	Display in diagram	Archive	Operational indications	Protection indications
289	UW KOSICE	GERAETE-STATUSMELDUNGEN	R110 EA09	7SD502	GA-ENDE-MARKIERUNG							SI	N	N				N	N	N		
290	UW KOSICE	GERAETE-STATUSMELDUNGEN	R110 EA09	7SD502	NABEHNUTIE		0	22	0	39	0	TR	O	N				N	N	N		
291	UW KOSICE	GERAETE-STATUSMELDUNGEN	R110 EA09	7SD502	NEPRIPRAVENY	KON ZAC	0	22	0	39	75	SI	R/C	Y	R/C	Y	1	N	N	N		
292	UW KOSICE	GERAETE-STATUSMELDUNGEN	R110 EA09	7SD502	PORUCHA	KON ZAC	0	22	0	39	75	SI	R/C	Y	R/C	Y	1	N	N	N		
293	UW KOSICE	GERAETE-STATUSMELDUNGEN	R110 EA09	7SD502	REFERENZZEIT																	
294	UW KOSICE	GERAETE-STATUSMELDUNGEN	R110 EA09	7SJ511	GA-ENDE-MARKIERUNG							SI	N	N				N	N	N		
295	UW KOSICE	GERAETE-STATUSMELDUNGEN	R110 EA09	7SJ511	NABEHNUTIE		0	22	0	39	0	TR	O	N				N	N	N		
296	UW KOSICE	GERAETE-STATUSMELDUNGEN	R110 EA09	7SJ511	NEPRIPRAVENY	KON ZAC	0	22	0	39	75	SI	R/C	Y	R/C	Y	1	N	N	N		
297	UW KOSICE	GERAETE-STATUSMELDUNGEN	R110 EA09	7SJ511	PORUCHA	KON ZAC	0	22	0	39	75	SI	R/C	Y	R/C	Y	1	N	N	N		
298	UW KOSICE	GERAETE-STATUSMELDUNGEN	R110 EA09	7SJ511	REFERENZZEIT																	
299	UW KOSICE	GERAETE-STATUSMELDUNGEN	R110 EA09	EAG	GA-ENDE-MARKIERUNG							SI	N	N				N	N	N		
300	UW KOSICE	GERAETE-STATUSMELDUNGEN	R110 EA09	EAG	NABEHNUTIE		0	22	0	39		TR	O	N				N	N	N		
301	UW KOSICE	GERAETE-STATUSMELDUNGEN	R110 EA09	EAG	NEPRIPRAVENY	KON ZAC	0	22	0	39	75	SI	R/C	Y	R/C	Y	1	N	N	N		
302	UW KOSICE	GERAETE-STATUSMELDUNGEN	R110 EA09	EAG	PORUCHA	KON ZAC	0	22	0	39	75	SI	R/C	N				N	N	N		
303	UW KOSICE	GERAETE-STATUSMELDUNGEN	R110 EA09	EAG	REFERENZZEIT																	
304	UW KOSICE	GERAETE-STATUSMELDUNGEN	R110 EA09	EAG	SYSTEMOVA HLASENI		0	36					O							N		
305	UW KOSICE	GERAETE-STATUSMELDUNGEN	R110 EA09	EAG	VNUTORNA CHYBA	KON ZAC	0	22	0	39	75	SI	R/C	Y	R/C	Y	1	N	N	N		
306	UW KOSICE	GERAETE-STATUSMELDUNGEN	R110 EA09	EAG	VYSIEL.BUF.PREPLNENY		0	22	0	39		TR	O	N				N	N	N		
307	UW KOSICE	GERAETE-STATUSMELDUNGEN	R110 EA10	7SJ512	GA-ENDE-MARKIERUNG							SI	N	N				N	N	N		
308	UW KOSICE	GERAETE-STATUSMELDUNGEN	R110 EA10	7SJ512	NABEHNUTIE		0	22	0	39	0	TR	O	N				N	N	N		
309	UW KOSICE	GERAETE-STATUSMELDUNGEN	R110 EA10	7SJ512	NEPRIPRAVENY	KON ZAC	0	22	0	39	75	SI	R/C	Y	R/C	Y	1	N	N	N		
310	UW KOSICE	GERAETE-STATUSMELDUNGEN	R110 EA10	7SJ512	PORUCHA	KON ZAC	0	22	0	39	75	SI	R/C	Y	R/C	Y	1	N	N	N		
311	UW KOSICE	GERAETE-STATUSMELDUNGEN	R110 EA10	7SJ512	REFERENZZEIT																	
312	UW KOSICE	GERAETE-STATUSMELDUNGEN	R110 EA10	7UT512	GA-ENDE-MARKIERUNG							SI	N	N				N	N	N		
313	UW KOSICE	GERAETE-STATUSMELDUNGEN	R110 EA10	7UT512	NABEHNUTIE		0	22	0	39	0	TR	O	N				N	N	N		
314	UW KOSICE	GERAETE-STATUSMELDUNGEN	R110 EA10	7UT512	NEPRIPRAVENY	KON ZAC	0	22	0	39	75	SI	R/C	Y	R/C	Y	1	N	N	N		
315	UW KOSICE	GERAETE-STATUSMELDUNGEN	R110 EA10	7UT512	PORUCHA	KON ZAC	0	22	0	39	75	SI	R/C	Y	R/C	Y	1	N	N	N		
316	UW KOSICE	GERAETE-STATUSMELDUNGEN	R110 EA10	7UT512	REFERENZZEIT																	
317	UW KOSICE	GERAETE-STATUSMELDUNGEN	R110 EA10	EAG	GA-ENDE-MARKIERUNG							SI	N	N				N	N	N		
318	UW KOSICE	GERAETE-STATUSMELDUNGEN	R110 EA10	EAG	NABEHNUTIE		0	22	0	39		TR	O	N				N	N	N		
319	UW KOSICE	GERAETE-STATUSMELDUNGEN	R110 EA10	EAG	NEPRIPRAVENY	KON ZAC	0	22	0	39	75	SI	R/C	Y	R/C	Y	1	N	N	N		
320	UW KOSICE	GERAETE-STATUSMELDUNGEN	R110 EA10	EAG	PORUCHA	KON ZAC	0	22	0	39	75	SI	R/C	N				N	N	N		

Documentation structur: Standard
Source file: KO050722.ODA

Date 22.07.2005
Drawn LANG
Appr.
Remarks | Date | Name | Norm | Orig./Repl. 1/Repl. by

VSZ KOSICE

SIEMENS AG
ISATOOLS

Substation control system 6MB
Status indications/system indications/reference time
Table

T = /BM 37
+
-S111
Page

Proprietary data, company confidential. All rights reserved.
Confie a titre de secret d'entreprise. Tous droits réservés.
Comunicado como segredo empresarial. Reservados todos os direitos.
Confiado como secreto industrial. Nos reservamos todos los derechos.

The reproduction, transmission or use of this document or its
is not permitted without express written authority.
Offenders will be liable for damages. All rights, including rights
created by patent grant or registration of a utility model or design, are reserved.

Documentation structur: Standard
Source file: KO050722.ODA

Line number	Command derivation	Indication derivation
289		
290		
291		
292		
293		
294		
295		
296		
297		
298		
299		FELDMERKER FUER GAENDE VOM EAG
300		
301	Alarm 1 (Hupenbefehl)	
302		
303		
304		
305	Alarm 1 (Hupenbefehl)	
306		
307		
308		
309		
310		
311		
312		
313		
314		
315		
316		
317		FELDMERKER FUER GAENDE VOM EAG
318		
319	Alarm 1 (Hupenbefehl)	
320		

Proprietary data, company confidential. All rights reserved.
Confia a título de secret de-treprise. Tous droits rservs.
Comunicado como segredo empresarial Reservados todos os direitos.
Confiado como secreto Industrial. Nos reservamos todos los derechos.

The reproduction, transmission or use of this document or its is not permitted without expres written authority.
Offenders will be liable for damages. All rights, including rights created by patent grant or registration of a utility model or design, are reserved

Line number	Station	Section	Bay	Logical device	Lower limit	Value text	Column section	Column bay	Column logical device	Column information	Column value text	Indication type	Entry in event list	Entry in alarm list	Acknowledge	Display in indication area	Indication class	Entry in SML	Display in diagram	Archive	Operational indications	Protection indications
321	UW KOSICE	GERAETE-STATUSMELDUNGEN	R110 EA10 EAG		REFERENZZEIT																	
322	UW KOSICE	GERAETE-STATUSMELDUNGEN	R110 EA10 EAG		SYSTEMOVA HLASENI		0	36					O							N		
323	UW KOSICE	GERAETE-STATUSMELDUNGEN	R110 EA10 EAG		VNUTORNA CHYBA	KON ZAC	0	22	0	39	75	SI	R/C	Y	R/C	Y	1	N	N	N		
324	UW KOSICE	GERAETE-STATUSMELDUNGEN	R110 EA10 EAG		VYSIEL.BUF.PREPLNENY		0	22	0	39		TR	O	N				N	N	N		
325	UW KOSICE	GERAETE-STATUSMELDUNGEN	R110 EA11 7SD502		GA-ENDE-MARKIERUNG							SI	N	N				N	N	N		
326	UW KOSICE	GERAETE-STATUSMELDUNGEN	R110 EA11 7SD502		NABEHNUTIE		0	22	0	39	0	TR	O	N				N	N	N		
327	UW KOSICE	GERAETE-STATUSMELDUNGEN	R110 EA11 7SD502		NEPRIPRAVENY	KON ZAC	0	22	0	39	75	SI	R/C	Y	R/C	Y	1	N	N	N		
328	UW KOSICE	GERAETE-STATUSMELDUNGEN	R110 EA11 7SD502		PORUCHA	KON ZAC	0	22	0	39	75	SI	R/C	Y	R/C	Y	1	N	N	N		
329	UW KOSICE	GERAETE-STATUSMELDUNGEN	R110 EA11 7SD502		REFERENZZEIT																	
330	UW KOSICE	GERAETE-STATUSMELDUNGEN	R110 EA11 7SJ511		GA-ENDE-MARKIERUNG							SI	N	N				N	N	N		
331	UW KOSICE	GERAETE-STATUSMELDUNGEN	R110 EA11 7SJ511		NABEHNUTIE		0	22	0	39	0	TR	O	N				N	N	N		
332	UW KOSICE	GERAETE-STATUSMELDUNGEN	R110 EA11 7SJ511		NEPRIPRAVENY	KON ZAC	0	22	0	39	75	SI	R/C	Y	R/C	Y	1	N	N	N		
333	UW KOSICE	GERAETE-STATUSMELDUNGEN	R110 EA11 7SJ511		PORUCHA	KON ZAC	0	22	0	39	75	SI	R/C	Y	R/C	Y	1	N	N	N		
334	UW KOSICE	GERAETE-STATUSMELDUNGEN	R110 EA11 7SJ511		REFERENZZEIT																	
335	UW KOSICE	GERAETE-STATUSMELDUNGEN	R110 EA11 EAG		GA-ENDE-MARKIERUNG							SI	N	N				N	N	N		
336	UW KOSICE	GERAETE-STATUSMELDUNGEN	R110 EA11 EAG		NABEHNUTIE		0	22	0	39		TR	O	N				N	N	N		
337	UW KOSICE	GERAETE-STATUSMELDUNGEN	R110 EA11 EAG		NEPRIPRAVENY	KON ZAC	0	22	0	39	75	SI	R/C	Y	R/C	Y	1	N	N	N		
338	UW KOSICE	GERAETE-STATUSMELDUNGEN	R110 EA11 EAG		PORUCHA	KON ZAC	0	22	0	39	75	SI	R/C	N				N	N	N		
339	UW KOSICE	GERAETE-STATUSMELDUNGEN	R110 EA11 EAG		REFERENZZEIT																	
340	UW KOSICE	GERAETE-STATUSMELDUNGEN	R110 EA11 EAG		SYSTEMOVA HLASENI		0	36					O							N		
341	UW KOSICE	GERAETE-STATUSMELDUNGEN	R110 EA11 EAG		VNUTORNA CHYBA	KON ZAC	0	22	0	39	75	SI	R/C	Y	R/C	Y	1	N	N	N		
342	UW KOSICE	GERAETE-STATUSMELDUNGEN	R110 EA11 EAG		VYSIEL.BUF.PREPLNENY		0	22	0	39		TR	O	N				N	N	N		
343	UW KOSICE	GERAETE-STATUSMELDUNGEN	R110 EA12 7SJ512		GA-ENDE-MARKIERUNG							SI	N	N				N	N	N		
344	UW KOSICE	GERAETE-STATUSMELDUNGEN	R110 EA12 7SJ512		NABEHNUTIE		0	22	0	39	0	TR	O	N				N	N	N		
345	UW KOSICE	GERAETE-STATUSMELDUNGEN	R110 EA12 7SJ512		NEPRIPRAVENY	KON ZAC	0	22	0	39	75	SI	R/C	Y	R/C	Y	1	N	N	N		
346	UW KOSICE	GERAETE-STATUSMELDUNGEN	R110 EA12 7SJ512		PORUCHA	KON ZAC	0	22	0	39	75	SI	R/C	Y	R/C	Y	1	N	N	N		
347	UW KOSICE	GERAETE-STATUSMELDUNGEN	R110 EA12 7SJ512		REFERENZZEIT																	
348	UW KOSICE	GERAETE-STATUSMELDUNGEN	R110 EA12 7UT512		GA-ENDE-MARKIERUNG							SI	N	N				N	N	N		
349	UW KOSICE	GERAETE-STATUSMELDUNGEN	R110 EA12 7UT512		NABEHNUTIE		0	22	0	39	0	TR	O	N				N	N	N		
350	UW KOSICE	GERAETE-STATUSMELDUNGEN	R110 EA12 7UT512		NEPRIPRAVENY	KON ZAC	0	22	0	39	75	SI	R/C	Y	R/C	Y	1	N	N	N		
351	UW KOSICE	GERAETE-STATUSMELDUNGEN	R110 EA12 7UT512		PORUCHA	KON ZAC	0	22	0	39	75	SI	R/C	Y	R/C	Y	1	N	N	N		
352	UW KOSICE	GERAETE-STATUSMELDUNGEN	R110 EA12 7UT512		REFERENZZEIT																	

Documentation structur: Standard
Source file: K0050722.ODA

Date	22.07.2005	VSZ KOSICE	SIEMENS AG ISAOOLS
Drawn	LANG		
Appr.			
Norm			
Orig./Repl. 1/Repl. by			

Substation control system 6MB
Status indications/system indications/reference time
Table

T = /BM 39
+
-S111
Page

Remarks | Date | Name

Proprietary data, company confidential. All rights reserved.
Confie a titre de secret d'entreprise. Tous droits r,serv,s.
Comunicado como segredo empresarial. Reservados todos os direitos.
Confiado como secreto industrial. Nos reservamos todos los derechos.

The reproduction, transmission or use of this document or its is not permitted without expres written authority.
Offenders will be liable for damages. All rights, including rights created by patent grant or registration of a utility model or design, are reserved

Documentation structur: Standard
Source file: KO050722.ODA

Line number	Command derivation	Indication derivation	
321			
322			
323	Alarm 1 (Hupenbefehl)		
324			
325			
326			
327			
328			
329			
330			
331			
332			
333			
334			
335		FELDMERKER FUER GAENDE VOM EAG	
336			
337	Alarm 1 (Hupenbefehl)		
338			
339			
340			
341	Alarm 1 (Hupenbefehl)		
342			
343			
344			
345			
346			
347			
348			
349			
350			
351			
352			

Rev.	Remarks	Date	Name	Date	22.07.2005	VSZ KOSICE	SIEMENS AG ISA TOOLS	Substation control system 6MB Status indications/system indications/reference time	T = /BM 40
				Drawn	LANG				+
				Appr.					
				Norm		Orig./Repl. 1/Repl. by		Table	-S111 Page 40

Proprietary data, company confidential. All rights reserved.
Con la altre de secret dentreprise. Tous droits reservs.
Comunicado como segredo empresarial Reservados todos os direitos
Comlado como secreto industrial Nos reservamos todos los derechos
The reproduction, transmission or use of this document or its
is not permitted without expres written authority.
Offenders will be liable for damages. All rights, including rights
created by patent grant or registration of a utility model or design, are reserved.

Line number	Station	Section	Bay	Logical device	Lower limit	Value text	Column section	Column bay	Column logical device	Column information	Column value text	Indication type	Entry in event list	Entry in alarm list	Acknowledge	Display in indication area	Indication class	Entry in SML	Display in diagram	Archive	Operational indications	Protection indications
353	UW KOSICE	GERAETE-STATUSMELDUNGEN	R110 EA12 EAG		GA-ENDE-MARKIERUNG							SI	N	N				N	N	N		
354	UW KOSICE	GERAETE-STATUSMELDUNGEN	R110 EA12 EAG		NABEHNUTIE		0	22	0	39		TR	O	N				N	N	N		
355	UW KOSICE	GERAETE-STATUSMELDUNGEN	R110 EA12 EAG		NEPRIPRAVENY	KON ZAC	0	22	0	39	75	SI	R/C	Y	R/C	Y	1	N	N	N		
356	UW KOSICE	GERAETE-STATUSMELDUNGEN	R110 EA12 EAG		PORUCHA	KON ZAC	0	22	0	39	75	SI	R/C	N				N	N	N		
357	UW KOSICE	GERAETE-STATUSMELDUNGEN	R110 EA12 EAG		REFERENZZEIT																	
358	UW KOSICE	GERAETE-STATUSMELDUNGEN	R110 EA12 EAG		SYSTEMOVA HLASENI		0	36					O							N		
359	UW KOSICE	GERAETE-STATUSMELDUNGEN	R110 EA12 EAG		VNUTORNA CHYBA	KON ZAC	0	22	0	39	75	SI	R/C	Y	R/C	Y	1	N	N	N		
360	UW KOSICE	GERAETE-STATUSMELDUNGEN	R110 EA12 EAG		VYSIEL.BUF.PREPLNENY		0	22	0	39		TR	O	N				N	N	N		
361	UW KOSICE	GERAETE-STATUSMELDUNGEN	R110 EA13 7SA511		GA-ENDE-MARKIERUNG							SI	N	N				N	N	N		
362	UW KOSICE	GERAETE-STATUSMELDUNGEN	R110 EA13 7SA511		NABEHNUTIE		0	22	0	39	0	TR	O	N				N	N	N		
363	UW KOSICE	GERAETE-STATUSMELDUNGEN	R110 EA13 7SA511		NEPRIPRAVENY	KON ZAC	0	22	0	39	75	SI	R/C	Y	R/C	Y	1	N	N	N		
364	UW KOSICE	GERAETE-STATUSMELDUNGEN	R110 EA13 7SA511		PORUCHA	KON ZAC	0	22	0	39	75	SI	R/C	Y	R/C	Y	1	N	N	N		
365	UW KOSICE	GERAETE-STATUSMELDUNGEN	R110 EA13 7SA511		REFERENZZEIT																	
366	UW KOSICE	GERAETE-STATUSMELDUNGEN	R110 EA13 7SJ511		GA-ENDE-MARKIERUNG							SI	N	N				N	N	N		
367	UW KOSICE	GERAETE-STATUSMELDUNGEN	R110 EA13 7SJ511		NABEHNUTIE		0	22	0	39	0	TR	O	N				N	N	N		
368	UW KOSICE	GERAETE-STATUSMELDUNGEN	R110 EA13 7SJ511		NEPRIPRAVENY	KON ZAC	0	22	0	39	75	SI	R/C	Y	R/C	Y	1	N	N	N		
369	UW KOSICE	GERAETE-STATUSMELDUNGEN	R110 EA13 7SJ511		PORUCHA	KON ZAC	0	22	0	39	75	SI	R/C	Y	R/C	Y	1	N	N	N		
370	UW KOSICE	GERAETE-STATUSMELDUNGEN	R110 EA13 7SJ511		REFERENZZEIT																	
371	UW KOSICE	GERAETE-STATUSMELDUNGEN	R110 EA13 EAG		GA-ENDE-MARKIERUNG							SI	N	N				N	N	N		
372	UW KOSICE	GERAETE-STATUSMELDUNGEN	R110 EA13 EAG		NABEHNUTIE		0	22	0	39		TR	O	N				N	N	N		
373	UW KOSICE	GERAETE-STATUSMELDUNGEN	R110 EA13 EAG		NEPRIPRAVENY	KON ZAC	0	22	0	39	75	SI	R/C	Y	R/C	Y	1	N	N	N		
374	UW KOSICE	GERAETE-STATUSMELDUNGEN	R110 EA13 EAG		PORUCHA	KON ZAC	0	22	0	39	75	SI	R/C	N				N	N	N		
375	UW KOSICE	GERAETE-STATUSMELDUNGEN	R110 EA13 EAG		REFERENZZEIT																	
376	UW KOSICE	GERAETE-STATUSMELDUNGEN	R110 EA13 EAG		SYSTEMOVA HLASENI		0	36					O							N		
377	UW KOSICE	GERAETE-STATUSMELDUNGEN	R110 EA13 EAG		VNUTORNA CHYBA	KON ZAC	0	22	0	39	75	SI	R/C	Y	R/C	Y	1	N	N	N		
378	UW KOSICE	GERAETE-STATUSMELDUNGEN	R110 EA13 EAG		VYSIEL.BUF.PREPLNENY		0	22	0	39		TR	O	N				N	N	N		
379	UW KOSICE	GERAETE-STATUSMELDUNGEN	R110 EA15 7SA511		GA-ENDE-MARKIERUNG							SI	N	N				N	N	N		
380	UW KOSICE	GERAETE-STATUSMELDUNGEN	R110 EA15 7SA511		NABEHNUTIE		0	22	0	39	0	TR	O	N				N	N	N		
381	UW KOSICE	GERAETE-STATUSMELDUNGEN	R110 EA15 7SA511		NEPRIPRAVENY	KON ZAC	0	22	0	39	75	SI	R/C	Y	R/C	Y	1	N	N	N		
382	UW KOSICE	GERAETE-STATUSMELDUNGEN	R110 EA15 7SA511		PORUCHA	KON ZAC	0	22	0	39	75	SI	R/C	Y	R/C	Y	1	N	N	N		
383	UW KOSICE	GERAETE-STATUSMELDUNGEN	R110 EA15 7SA511		REFERENZZEIT																	
384	UW KOSICE	GERAETE-STATUSMELDUNGEN	R110 EA15 7SJ511		GA-ENDE-MARKIERUNG							SI	N	N				N	N	N		

Proprietary data, company confidential. All rights reserved.
Confia a ttre de secret d'entreprise. Tous droits réservés.
Comunicado como segredo empresarial. Reservados todos os direitos.
Confiado como secreto industrial. Nos reservamos todos los derechos.

The reproduction, transmission or use of this document or its contents is not permitted without express written authority. Offenders will be liable for damages. All rights, including rights created by patent grant or registration of a utility model or design, are reserved.

Line number	Command derivation	Indication derivation
353		FELDMERKER FUER GAENDE VOM EAG
354		
355	Alarm 1 (Hupenbefehl)	
356		
357		
358		
359	Alarm 1 (Hupenbefehl)	
360		
361		
362		
363		
364		
365		
366		
367		
368		
369		
370		
371		FELDMERKER FUER GAENDE VOM EAG
372		
373	Alarm 1 (Hupenbefehl)	
374		
375		
376		
377	Alarm 1 (Hupenbefehl)	
378		
379		
380		
381		
382		
383		
384		

Documentation structur: Standard
Source file: KO050722.ODA

Date	22.07.2005	VSZ KOSICE	SIEMENS AG ISAIOOLS	Substation control system 6MB Status indications/system indications/reference time	T = /BM 42
Drawn	LANG				+
Appr.					
Rev. / Remarks / Date / Name / Norm		Orig./Repl. 1/Repl. by		Table	-S111 Page 42

Proprietary data, company confidential. All rights reserved
Confia a tihe da secret d'entreprise. Tous droits r.ser.v.s.
Comunicado como segredo empresarial Reservados todos os direitos.
Confiado como secreto industrial. Nos reservamos todos los derechos.

The reproduction, transmission or use of this document or its
is not permitted without expres written authority.
Offenders will be liable for damages. All rights, including rights
created by patent grant or registration of a utility model or design, are reserved

Line number	Station	Section	Bay	Logical device	Lower limit	Value text	Column section	Column bay	Column logical device	Column information	Column value text	Indication type	Entry in event list	Entry in alarm list	Acknowledge	Display in indication area	Indication class	Entry in SML	Display in diagram	Archive	Operational indications	Protection indications
385	UW KOSICE	GERAETE-STATUSMELDUNGEN	R110 EA15 7SJ511		NABEHNUTIE		0	22	0	39	0	TR	O	N				N	N	N		
386	UW KOSICE	GERAETE-STATUSMELDUNGEN	R110 EA15 7SJ511		NEPRIPRAVENY	KON ZAC	0	22	0	39	75	SI	R/C	Y	R/C	Y	1	N	N	N		
387	UW KOSICE	GERAETE-STATUSMELDUNGEN	R110 EA15 7SJ511		PORUCHA	KON ZAC	0	22	0	39	75	SI	R/C	Y	R/C	Y	1	N	N	N		
388	UW KOSICE	GERAETE-STATUSMELDUNGEN	R110 EA15 7SJ511		REFERENZZEIT																	
389	UW KOSICE	GERAETE-STATUSMELDUNGEN	R110 EA15 EAG		GA-ENDE-MARKIERUNG							SI	N	N				N	N	N		
390	UW KOSICE	GERAETE-STATUSMELDUNGEN	R110 EA15 EAG		NABEHNUTIE		0	22	0	39		TR	O	N				N	N	N		
391	UW KOSICE	GERAETE-STATUSMELDUNGEN	R110 EA15 EAG		NEPRIPRAVENY	KON ZAC	0	22	0	39	75	SI	R/C	Y	R/C	Y	1	N	N	N		
392	UW KOSICE	GERAETE-STATUSMELDUNGEN	R110 EA15 EAG		PORUCHA	KON ZAC	0	22	0	39	75	SI	R/C	N				N	N	N		
393	UW KOSICE	GERAETE-STATUSMELDUNGEN	R110 EA15 EAG		REFERENZZEIT																	
394	UW KOSICE	GERAETE-STATUSMELDUNGEN	R110 EA15 EAG		SYSTEMOVA HLASENI		0	36					O							N		
395	UW KOSICE	GERAETE-STATUSMELDUNGEN	R110 EA15 EAG		VNUTORNA CHYBA	KON ZAC	0	22	0	39	75	SI	R/C	Y	R/C	Y	1	N	N	N		
396	UW KOSICE	GERAETE-STATUSMELDUNGEN	R110 EA15 EAG		VYSIEL.BUF.PREPLNENY		0	22	0	39		TR	O	N				N	N	N		
397	UW KOSICE	GERAETE-STATUSMELDUNGEN	R110 EA16 EAG		GA-ENDE-MARKIERUNG							SI	N	N				N	N	N		
398	UW KOSICE	GERAETE-STATUSMELDUNGEN	R110 EA16 EAG		NABEHNUTIE		0	22	0	39		TR	O	N				N	N	N		
399	UW KOSICE	GERAETE-STATUSMELDUNGEN	R110 EA16 EAG		NEPRIPRAVENY	KON ZAC	0	22	0	39	75	SI	R/C	Y	R/C	Y	1	N	N	N		
400	UW KOSICE	GERAETE-STATUSMELDUNGEN	R110 EA16 EAG		PORUCHA	KON ZAC	0	22	0	39	75	SI	R/C	N				N	N	N		
401	UW KOSICE	GERAETE-STATUSMELDUNGEN	R110 EA16 EAG		REFERENZZEIT																	
402	UW KOSICE	GERAETE-STATUSMELDUNGEN	R110 EA16 EAG		SYSTEMOVA HLASENI		0	36					O							N		
403	UW KOSICE	GERAETE-STATUSMELDUNGEN	R110 EA16 EAG		VNUTORNA CHYBA	KON ZAC	0	22	0	39	75	SI	R/C	Y	R/C	Y	1	N	N	N		
404	UW KOSICE	GERAETE-STATUSMELDUNGEN	R110 EA16 EAG		VYSIEL.BUF.PREPLNENY		0	22	0	39		TR	O	N				N	N	N		
405	UW KOSICE	GERAETE-STATUSMELDUNGEN	R110 EA17 7SD502		GA-ENDE-MARKIERUNG							SI	N	N				N	N	N		
406	UW KOSICE	GERAETE-STATUSMELDUNGEN	R110 EA17 7SD502		NABEHNUTIE		0	22	0	39	0	TR	O	N				N	N	N		
407	UW KOSICE	GERAETE-STATUSMELDUNGEN	R110 EA17 7SD502		NEPRIPRAVENY	KON ZAC	0	22	0	39	75	SI	R/C	Y	R/C	Y	1	N	N	N		
408	UW KOSICE	GERAETE-STATUSMELDUNGEN	R110 EA17 7SD502		PORUCHA	KON ZAC	0	22	0	39	75	SI	R/C	Y	R/C	Y	1	N	N	N		
409	UW KOSICE	GERAETE-STATUSMELDUNGEN	R110 EA17 7SD502		REFERENZZEIT																	
410	UW KOSICE	GERAETE-STATUSMELDUNGEN	R110 EA17 7SJ512		GA-ENDE-MARKIERUNG							SI	N	N				N	N	N		
411	UW KOSICE	GERAETE-STATUSMELDUNGEN	R110 EA17 7SJ512		NABEHNUTIE		0	22	0	39	0	TR	O	N				N	N	N		
412	UW KOSICE	GERAETE-STATUSMELDUNGEN	R110 EA17 7SJ512		NEPRIPRAVENY	KON ZAC	0	22	0	39	75	SI	R/C	Y	R/C	Y	1	N	N	N		
413	UW KOSICE	GERAETE-STATUSMELDUNGEN	R110 EA17 7SJ512		PORUCHA	KON ZAC	0	22	0	39	75	SI	R/C	Y	R/C	Y	1	N	N	N		
414	UW KOSICE	GERAETE-STATUSMELDUNGEN	R110 EA17 7SJ512		REFERENZZEIT																	
415	UW KOSICE	GERAETE-STATUSMELDUNGEN	R110 EA17 EAG		GA-ENDE-MARKIERUNG							SI	N	N				N	N	N		
416	UW KOSICE	GERAETE-STATUSMELDUNGEN	R110 EA17 EAG		NABEHNUTIE		0	22	0	39		TR	O	N				N	N	N		

Documentation structur: Standard
Source file: KO050722.ODA

Date	22.07.2005	VSZ KOSICE	SIEMENS AG ISATOOLS	Substation control system 6MB	T = /BM 43
Drawn	LANG			Status indications/system indications/reference time	+
Appr.					-S111 Page 43
Remarks	Date	Name Norm	Orig./Repl. 1/Repl. by	Table	

Line number	Command derivation	Indication derivation	
385			
386			
387			
388			
389		FELDMERKER FUER GAENDE VOM EAG	
390			
391	Alarm 1 (Hupenbefehl)		
392			
393			
394			
395	Alarm 1 (Hupenbefehl)		
396			
397		FELDMERKER FUER GAENDE VOM EAG	
398			
399	Alarm 1 (Hupenbefehl)		
400			
401			
402			
403	Alarm 1 (Hupenbefehl)		
404			
405			
406			
407			
408			
409			
410			
411			
412			
413			
414			
415		FELDMERKER FUER GAENDE VOM EAG	
416			

Proprietary data, company confidential. All rights reserved.
Confie a titre de secret d'entreprise. Tous droits réservés.
Comunicado como segredo empresarial. Reservados todos os direitos.
Confiado como secreto industrial. Nos reservamos todos los derechos.

The reproduction, transmission or use of this document or its is not permitted without express written authority.
Offenders will be liable for damages. All rights, including rights created by patent grant or registration of a utility model or design, are reserved.

Documentation structur: Standard
Source file: KO050722.ODA

Rev.	Remarks	Date	Name	Date	22.07.2005	VSZ KOSICE	SIEMENS AG ISAOOLS	Substation control system 6MB Status indications/system indications/reference time	T = /BM 44
				Drawn	LANG				+
				Appr.					
				Norm		Orig./Repl. 1/Repl. by		Table	-S111 Page 44

Proprietary data, company confidential. All rights reserved.
Confia a ltrie de secret dentreprise. Tous droits reserv s.
Comunicado como segredo empresarial. Reservados todos os direitos.
Confiado como secreto industrial. Nos reservamos todos los derechos.

The reproduction, transmission or use of this document or its contents is not permitted without express written authority. Offenders will be liable for damages. All rights, including rights created by patent grant or registration of a utility model or design, are reserved.

Line number	Station	Section	Bay	Logical device	Lower limit	Value text	Column section	Column bay	Column logical device	Column information	Column value text	Indication type	Entry in event list	Entry in alarm list	Acknowledge	Display in indication area	Indication class	Entry in SML	Display in diagram	Archive	Operational indications	Protection indications
417	UW KOSICE	GERAETE-STATUSMELDUNGEN	R110 EA17 EAG		NEPRIPRAVENY	KON ZAC	0	22	0	39	75	SI	R/C	Y	R/C	Y	1	N	N	N		
418	UW KOSICE	GERAETE-STATUSMELDUNGEN	R110 EA17 EAG		PORUCHA	KON ZAC	0	22	0	39	75	SI	R/C	N				N	N	N		
419	UW KOSICE	GERAETE-STATUSMELDUNGEN	R110 EA17 EAG		REFERENZZEIT																	
420	UW KOSICE	GERAETE-STATUSMELDUNGEN	R110 EA17 EAG		SYSTEMOVA HLASENI		0	36					O							N		
421	UW KOSICE	GERAETE-STATUSMELDUNGEN	R110 EA17 EAG		VNUTORNA CHYBA	KON ZAC	0	22	0	39	75	SI	R/C	Y	R/C	Y	1	N	N	N		
422	UW KOSICE	GERAETE-STATUSMELDUNGEN	R110 EA17 EAG		VYSIEL.BUF.PREPLNENY		0	22	0	39		TR	O	N				N	N	N		
423	UW KOSICE	GERAETE-STATUSMELDUNGEN	R110 EA18 7SD502		GA-ENDE-MARKIERUNG							SI	N	N				N	N	N		
424	UW KOSICE	GERAETE-STATUSMELDUNGEN	R110 EA18 7SD502		NABEHNUTIE		0	22	0	39	0	TR	O	N				N	N	N		
425	UW KOSICE	GERAETE-STATUSMELDUNGEN	R110 EA18 7SD502		NEPRIPRAVENY	KON ZAC	0	22	0	39	75	SI	R/C	Y	R/C	Y	1	N	N	N		
426	UW KOSICE	GERAETE-STATUSMELDUNGEN	R110 EA18 7SD502		PORUCHA	KON ZAC	0	22	0	39	75	SI	R/C	Y	R/C	Y	1	N	N	N		
427	UW KOSICE	GERAETE-STATUSMELDUNGEN	R110 EA18 7SD502		REFERENZZEIT																	
428	UW KOSICE	GERAETE-STATUSMELDUNGEN	R110 EA18 7SJ511		GA-ENDE-MARKIERUNG							SI	N	N				N	N	N		
429	UW KOSICE	GERAETE-STATUSMELDUNGEN	R110 EA18 7SJ511		NABEHNUTIE		0	22	0	39	0	TR	O	N				N	N	N		
430	UW KOSICE	GERAETE-STATUSMELDUNGEN	R110 EA18 7SJ511		NEPRIPRAVENY	KON ZAC	0	22	0	39	75	SI	R/C	Y	R/C	Y	1	N	N	N		
431	UW KOSICE	GERAETE-STATUSMELDUNGEN	R110 EA18 7SJ511		PORUCHA	KON ZAC	0	22	0	39	75	SI	R/C	Y	R/C	Y	1	N	N	N		
432	UW KOSICE	GERAETE-STATUSMELDUNGEN	R110 EA18 7SJ511		REFERENZZEIT																	
433	UW KOSICE	GERAETE-STATUSMELDUNGEN	R110 EA18 EAG		GA-ENDE-MARKIERUNG							SI	N	N				N	N	N		
434	UW KOSICE	GERAETE-STATUSMELDUNGEN	R110 EA18 EAG		NABEHNUTIE		0	22	0	39		TR	O	N				N	N	N		
435	UW KOSICE	GERAETE-STATUSMELDUNGEN	R110 EA18 EAG		NEPRIPRAVENY	KON ZAC	0	22	0	39	75	SI	R/C	Y	R/C	Y	1	N	N	N		
436	UW KOSICE	GERAETE-STATUSMELDUNGEN	R110 EA18 EAG		PORUCHA	KON ZAC	0	22	0	39	75	SI	R/C	N				N	N	N		
437	UW KOSICE	GERAETE-STATUSMELDUNGEN	R110 EA18 EAG		REFERENZZEIT																	
438	UW KOSICE	GERAETE-STATUSMELDUNGEN	R110 EA18 EAG		SYSTEMOVA HLASENI		0	36					O							N		
439	UW KOSICE	GERAETE-STATUSMELDUNGEN	R110 EA18 EAG		VNUTORNA CHYBA	KON ZAC	0	22	0	39	75	SI	R/C	Y	R/C	Y	1	N	N	N		
440	UW KOSICE	GERAETE-STATUSMELDUNGEN	R110 EA18 EAG		VYSIEL.BUF.PREPLNENY		0	22	0	39		TR	O	N				N	N	N		
441	UW KOSICE	GERAETE-STATUSMELDUNGEN	R110 EA19 7SD502		GA-ENDE-MARKIERUNG							SI	N	N				N	N	N		
442	UW KOSICE	GERAETE-STATUSMELDUNGEN	R110 EA19 7SD502		NABEHNUTIE		0	22	0	39	0	TR	O	N				N	N	N		
443	UW KOSICE	GERAETE-STATUSMELDUNGEN	R110 EA19 7SD502		NEPRIPRAVENY	KON ZAC	0	22	0	39	75	SI	R/C	Y	R/C	Y	1	N	N	N		
444	UW KOSICE	GERAETE-STATUSMELDUNGEN	R110 EA19 7SD502		PORUCHA	KON ZAC	0	22	0	39	75	SI	R/C	Y	R/C	Y	1	N	N	N		
445	UW KOSICE	GERAETE-STATUSMELDUNGEN	R110 EA19 7SD502		REFERENZZEIT																	
446	UW KOSICE	GERAETE-STATUSMELDUNGEN	R110 EA19 7SJ511		GA-ENDE-MARKIERUNG							SI	N	N				N	N	N		
447	UW KOSICE	GERAETE-STATUSMELDUNGEN	R110 EA19 7SJ511		NABEHNUTIE		0	22	0	39	0	TR	O	N				N	N	N		
448	UW KOSICE	GERAETE-STATUSMELDUNGEN	R110 EA19 7SJ511		NEPRIPRAVENY	KON ZAC	0	22	0	39	75	SI	R/C	Y	R/C	Y	1	N	N	N		

Documentation structur: Standard
Source file: KO050722.ODA

Date	22.07.2005	VSZ KOSICE	SIEMENS AG ISAGOOLS
Drawn	LANG		
Appr.			
Remarks	Date	Name	Norm
		Orig./Repl. 1/Repl. by	

Substation control system 6MB
Status indications/system indications/reference time
Table

T = /BM 45
+
-S111
Page 5

Line number	Command derivation	Indication derivation	
417	Alarm 1 (Hupenbefehl)		
418			
419			
420			
421	Alarm 1 (Hupenbefehl)		
422			
423			
424			
425			
426			
427			
428			
429			
430			
431			
432			
433		FELDMERKER FUER GAENDE VOM EAG	
434			
435	Alarm 1 (Hupenbefehl)		
436			
437			
438			
439	Alarm 1 (Hupenbefehl)		
440			
441			
442			
443			
444			
445			
446			
447			
448			

Proprietary data, company confidential. All rights reserved.
Confie a titre de secret d'entreprise. Tous droits reservés.
Comunicado como segredo empresarial. Reservados todos os direitos.
Confiado como secreto industrial. Nos reservamos todos los derechos.

The reproduction, transmission or use of this document or its is not permitted without expres written authority.
Offenders will be liable for damages. All rights, including rights created by patent grant or registration of a utility model or design, are reserved.

Documentation structur: Standard
Source file: KO050722.ODA

Rev.	Remarks	Date	Name	Date	22.07.2005	VSZ KOSICE	SIEMENS AG ISAOOLS	Substation control system 6MB Status indications/system indications/reference time	T = /BM 46
				Drawn	LANG				+
				Appr.					
				Norm		Orig./Repl. 1/Repl. by		Table	-S111 Page 46

Line number	Station	Section	Bay	Logical device	Lower limit	Value text	Column section	Column bay	Column logical device	Column information	Column value text	Indication type	Entry in event list	Entry in alarm list	Acknowledge	Display in indication area	Indication class	Entry in SML	Display in diagram	Archive	Operational indications	Protection indications
449	UW KOSICE	GERAETE-STATUSMELDUNGEN	R110 EA19	7SJ511	PORUCHA	KON ZAC	0	22	0	39	75	SI	R/C	Y	R/C	Y	1	N	N	N		
450	UW KOSICE	GERAETE-STATUSMELDUNGEN	R110 EA19	7SJ511	REFERENZZEIT																	
451	UW KOSICE	GERAETE-STATUSMELDUNGEN	R110 EA19	EAG	GA-ENDE-MARKIERUNG							SI	N	N				N	N	N		
452	UW KOSICE	GERAETE-STATUSMELDUNGEN	R110 EA19	EAG	NABEHNUTIE		0	22	0	39		TR	O	N				N	N	N		
453	UW KOSICE	GERAETE-STATUSMELDUNGEN	R110 EA19	EAG	NEPRIPRAVENY	KON ZAC	0	22	0	39	75	SI	R/C	Y	R/C	Y	1	N	N	N		
454	UW KOSICE	GERAETE-STATUSMELDUNGEN	R110 EA19	EAG	PORUCHA	KON ZAC	0	22	0	39	75	SI	R/C	N				N	N	N		
455	UW KOSICE	GERAETE-STATUSMELDUNGEN	R110 EA19	EAG	REFERENZZEIT																	
456	UW KOSICE	GERAETE-STATUSMELDUNGEN	R110 EA19	EAG	SYSTEMOVA HLASENI		0	36					O							N		
457	UW KOSICE	GERAETE-STATUSMELDUNGEN	R110 EA19	EAG	VNUTORNA CHYBA	KON ZAC	0	22	0	39	75	SI	R/C	Y	R/C	Y	1	N	N	N		
458	UW KOSICE	GERAETE-STATUSMELDUNGEN	R110 EA19	EAG	VYSIEL.BUF.PREPLNENY		0	22	0	39		TR	O	N				N	N	N		
459	UW KOSICE	GERAETE-STATUSMELDUNGEN	R110 EA20	7SD502	GA-ENDE-MARKIERUNG							SI	N	N				N	N	N		
460	UW KOSICE	GERAETE-STATUSMELDUNGEN	R110 EA20	7SD502	NABEHNUTIE		0	22	0	39	0	TR	O	N				N	N	N		
461	UW KOSICE	GERAETE-STATUSMELDUNGEN	R110 EA20	7SD502	NEPRIPRAVENY	KON ZAC	0	22	0	39	75	SI	R/C	Y	R/C	Y	1	N	N	N		
462	UW KOSICE	GERAETE-STATUSMELDUNGEN	R110 EA20	7SD502	PORUCHA	KON ZAC	0	22	0	39	75	SI	R/C	Y	R/C	Y	1	N	N	N		
463	UW KOSICE	GERAETE-STATUSMELDUNGEN	R110 EA20	7SD502	REFERENZZEIT																	
464	UW KOSICE	GERAETE-STATUSMELDUNGEN	R110 EA20	7SJ511	GA-ENDE-MARKIERUNG							SI	N	N				N	N	N		
465	UW KOSICE	GERAETE-STATUSMELDUNGEN	R110 EA20	7SJ511	NABEHNUTIE		0	22	0	39	0	TR	O	N				N	N	N		
466	UW KOSICE	GERAETE-STATUSMELDUNGEN	R110 EA20	7SJ511	NEPRIPRAVENY	KON ZAC	0	22	0	39	75	SI	R/C	Y	R/C	Y	1	N	N	N		
467	UW KOSICE	GERAETE-STATUSMELDUNGEN	R110 EA20	7SJ511	PORUCHA	KON ZAC	0	22	0	39	75	SI	R/C	Y	R/C	Y	1	N	N	N		
468	UW KOSICE	GERAETE-STATUSMELDUNGEN	R110 EA20	7SJ511	REFERENZZEIT																	
469	UW KOSICE	GERAETE-STATUSMELDUNGEN	R110 EA20	EAG	GA-ENDE-MARKIERUNG							SI	N	N				N	N	N		
470	UW KOSICE	GERAETE-STATUSMELDUNGEN	R110 EA20	EAG	NABEHNUTIE		0	22	0	39		TR	O	N				N	N	N		
471	UW KOSICE	GERAETE-STATUSMELDUNGEN	R110 EA20	EAG	NEPRIPRAVENY	KON ZAC	0	22	0	39	75	SI	R/C	Y	R/C	Y	1	N	N	N		
472	UW KOSICE	GERAETE-STATUSMELDUNGEN	R110 EA20	EAG	PORUCHA	KON ZAC	0	22	0	39	75	SI	R/C	N				N	N	N		
473	UW KOSICE	GERAETE-STATUSMELDUNGEN	R110 EA20	EAG	REFERENZZEIT																	
474	UW KOSICE	GERAETE-STATUSMELDUNGEN	R110 EA20	EAG	SYSTEMOVA HLASENI		0	36					O							N		
475	UW KOSICE	GERAETE-STATUSMELDUNGEN	R110 EA20	EAG	VNUTORNA CHYBA	KON ZAC	0	22	0	39	75	SI	R/C	Y	R/C	Y	1	N	N	N		
476	UW KOSICE	GERAETE-STATUSMELDUNGEN	R110 EA20	EAG	VYSIEL.BUF.PREPLNENY		0	22	0	39		TR	O	N				N	N	N		
477	UW KOSICE	GERAETE-STATUSMELDUNGEN	R110 EA21	7SD610	GA-ENDE-MARKIERUNG							SI	N	N				N	N	N		
478	UW KOSICE	GERAETE-STATUSMELDUNGEN	R110 EA21	7SD610	NABEHNUTIE		0	22	0	39	0	TR	O	N				N	N	N		
479	UW KOSICE	GERAETE-STATUSMELDUNGEN	R110 EA21	7SD610	NEPRIPRAVENY	KON ZAC	0	22	0	39	75	SI	R/C	Y	R/C	Y	1	N	N	N		
480	UW KOSICE	GERAETE-STATUSMELDUNGEN	R110 EA21	7SD610	PORUCHA	KON ZAC	0	22	0	39	75	SI	R/C	Y	R/C	Y	1	N	N	N		

Proprietary data, company confidential. All rights reserved
Confiaa ltre de secret d'entreprise. Tous droits reservs
Comunicado como segredo empresarial. Reservados todos os direitos
Confiado como secreto industrial. Nos reservamos todos los derechos
The reproduction, transmission or use of this document or its contents is not permitted without express written authority. Offenders will be liable for damages. All rights, including rights created by patent grant or registration of a utility model or design, are reserved

Documentation structure: Standard
Source file: KO050722.ODA

Date	22.07.2005	VSZ KOSICE	SIEMENS AG ISAOOLS
Drawn	LANG		
Appr.			
Remarks	Date	Name	Norm

Orig./Repl. 1/Repl. by

Substation control system 6MB
Status indications/system indications/reference time
Table

T = /BM 47
+
-S111
Page 7

Line number	Command derivation	Indication derivation	
449			
450			
451		FELDMERKER FUER GAENDE VOM EAG	
452			
453	Alarm 1 (Hupenbefehl)		
454			
455			
456			
457	Alarm 1 (Hupenbefehl)		
458			
459			
460			
461			
462			
463			
464			
465			
466			
467			
468			
469		FELDMERKER FUER GAENDE VOM EAG	
470			
471	Alarm 1 (Hupenbefehl)		
472			
473			
474			
475	Alarm 1 (Hupenbefehl)		
476			
477			
478			
479			
480			

Proprietary data, company confidential. All rights reserved.
Confie a titre de secret d'entreprise. Tous droits réservés.
Comunicado como segredo empresarial. Reservados todos os direitos.
Confiado como secreto industrial. Nos reservamos todos los derechos.

The reproduction, transmission or use of this document or its is not permitted without express written authority.
Offenders will be liable for damages. All rights, including rights created by patent grant or registration of a utility model or design, are reserved.

Documentation structur: Standard
Source file: KO050722.ODA

Rev.	Remarks	Date	Name	Date	22.07.2005	VSZ KOSICE	SIEMENS AG ISA TOOLS	Substation control system 6MB Status indications/system indications/reference time	T = /BM 48
				Drawn	LANG				+
				Appr.					
				Norm		Orig./Repl. 1/Repl. by		Table	-S111 Page 48

Proprietary data, company confidential. All rights reserved.
Confie a tres de secret dentreprise. Tous droits r,serv,s.
Comunicado como segredo empresarial. Reservados todos os direitos.
Confiado como secreto industrial. Nos reservamos todos los derechos.

The reproduction, transmission or use of this document or its
is not permitted without expres written authority.
Offenders will be liable for damages. All rights, including rights
created by patent grant or registration of a utility model or design, are reserved.

Line number	Station	Section	Bay	Logical device	Lower limit	Value text	Column section	Column bay	Column logical device	Column information	Column value text	Indication type	Entry in event list	Entry in alarm list	Acknowledge	Display in indication area	Indication class	Entry in SML	Display in diagram	Archive	Operational indications	Protection indications
481	UW KOSICE	GERAETE-STATUSMELDUNGEN	R110 EA21	7SD610	REFERENZZEIT																	
482	UW KOSICE	GERAETE-STATUSMELDUNGEN	R110 EA21	7SJ612	GA-ENDE-MARKIERUNG							SI	N	N				N	N	N		
483	UW KOSICE	GERAETE-STATUSMELDUNGEN	R110 EA21	7SJ612	NABEHNUTIE		0	22	0	39	0	TR	O	N				N	N	N		
484	UW KOSICE	GERAETE-STATUSMELDUNGEN	R110 EA21	7SJ612	NEPRIPRAVENY	KON ZAC	0	22	0	39	75	SI	R/C	Y	R/C	Y	1	N	N	N		
485	UW KOSICE	GERAETE-STATUSMELDUNGEN	R110 EA21	7SJ612	PORUCHA	KON ZAC	0	22	0	39	75	SI	R/C	Y	R/C	Y	1	N	N	N		
486	UW KOSICE	GERAETE-STATUSMELDUNGEN	R110 EA21	7SJ612	REFERENZZEIT																	
487	UW KOSICE	GERAETE-STATUSMELDUNGEN	R110 EA21	EAG	GA-ENDE-MARKIERUNG							SI	N	N				N	N	N		
488	UW KOSICE	GERAETE-STATUSMELDUNGEN	R110 EA21	EAG	NABEHNUTIE		0	22	0	39		TR	O	N				N	N	N		
489	UW KOSICE	GERAETE-STATUSMELDUNGEN	R110 EA21	EAG	NEPRIPRAVENY	KON ZAC	0	22	0	39	75	SI	R/C	Y	R/C	Y	1	N	N	N		
490	UW KOSICE	GERAETE-STATUSMELDUNGEN	R110 EA21	EAG	PORUCHA	KON ZAC	0	22	0	39	75	SI	R/C	N				N	N	N		
491	UW KOSICE	GERAETE-STATUSMELDUNGEN	R110 EA21	EAG	REFERENZZEIT																	
492	UW KOSICE	GERAETE-STATUSMELDUNGEN	R110 EA21	EAG	SYSTEMOVA HLASENI		0	36					O							N		
493	UW KOSICE	GERAETE-STATUSMELDUNGEN	R110 EA21	EAG	VNUTORNA CHYBA	KON ZAC	0	22	0	39	75	SI	R/C	Y	R/C	Y	1	N	N	N		
494	UW KOSICE	GERAETE-STATUSMELDUNGEN	R110 EA21	EAG	VYSIEL.BUF.PREPLNENY		0	22	0	39		TR	O	N				N	N	N		
495	UW KOSICE	GERAETE-STATUSMELDUNGEN	R110 EA23	7SD502	GA-ENDE-MARKIERUNG							SI	N	N				N	N	N		
496	UW KOSICE	GERAETE-STATUSMELDUNGEN	R110 EA23	7SD502	NABEHNUTIE		0	22	0	39	0	TR	O	N				N	N	N		
497	UW KOSICE	GERAETE-STATUSMELDUNGEN	R110 EA23	7SD502	NEPRIPRAVENY	KON ZAC	0	22	0	39	75	SI	R/C	Y	R/C	Y	1	N	N	N		
498	UW KOSICE	GERAETE-STATUSMELDUNGEN	R110 EA23	7SD502	PORUCHA	KON ZAC	0	22	0	39	75	SI	R/C	Y	R/C	Y	1	N	N	N		
499	UW KOSICE	GERAETE-STATUSMELDUNGEN	R110 EA23	7SD502	REFERENZZEIT																	
500	UW KOSICE	GERAETE-STATUSMELDUNGEN	R110 EA23	7SJ512	GA-ENDE-MARKIERUNG							SI	N	N				N	N	N		
501	UW KOSICE	GERAETE-STATUSMELDUNGEN	R110 EA23	7SJ512	NABEHNUTIE		0	22	0	39	0	TR	O	N				N	N	N		
502	UW KOSICE	GERAETE-STATUSMELDUNGEN	R110 EA23	7SJ512	NEPRIPRAVENY	KON ZAC	0	22	0	39	75	SI	R/C	Y	R/C	Y	1	N	N	N		
503	UW KOSICE	GERAETE-STATUSMELDUNGEN	R110 EA23	7SJ512	PORUCHA	KON ZAC	0	22	0	39	75	SI	R/C	Y	R/C	Y	1	N	N	N		
504	UW KOSICE	GERAETE-STATUSMELDUNGEN	R110 EA23	7SJ512	REFERENZZEIT																	
505	UW KOSICE	GERAETE-STATUSMELDUNGEN	R110 EA23	EAG	GA-ENDE-MARKIERUNG							SI	N	N				N	N	N		
506	UW KOSICE	GERAETE-STATUSMELDUNGEN	R110 EA23	EAG	NABEHNUTIE		0	22	0	39		TR	O	N				N	N	N		
507	UW KOSICE	GERAETE-STATUSMELDUNGEN	R110 EA23	EAG	NEPRIPRAVENY	KON ZAC	0	22	0	39	75	SI	R/C	Y	R/C	Y	1	N	N	N		
508	UW KOSICE	GERAETE-STATUSMELDUNGEN	R110 EA23	EAG	PORUCHA	KON ZAC	0	22	0	39	75	SI	R/C	N				N	N	N		
509	UW KOSICE	GERAETE-STATUSMELDUNGEN	R110 EA23	EAG	REFERENZZEIT																	
510	UW KOSICE	GERAETE-STATUSMELDUNGEN	R110 EA23	EAG	SYSTEMOVA HLASENI		0	36					O							N		
511	UW KOSICE	GERAETE-STATUSMELDUNGEN	R110 EA23	EAG	VNUTORNA CHYBA	KON ZAC	0	22	0	39	75	SI	R/C	Y	R/C	Y	1	N	N	N		
512	UW KOSICE	GERAETE-STATUSMELDUNGEN	R110 EA23	EAG	VYSIEL.BUF.PREPLNENY		0	22	0	39		TR	O	N				N	N	N		

Documentation structur: Standard
Source file: KO050722.ODA

Date	22.07.2005	VSZ KOSICE	SIEMENS AG ISATOOLS
Drawn	LANG		
Appr.			
Remarks	Date	Name Norm	Orig./Repl. 1/Repl. by

Substation control system 6MB
Status indications/system indications/reference time
Table

T = /BM 49
+
-S111
Page

Line number	Command derivation	Indication derivation	
481			
482			
483			
484			
485			
486			
487		FELDMERKER FUER GAENDE VOM EAG	
488			
489	Alarm 1 (Hupenbefehl)		
490			
491			
492			
493	Alarm 1 (Hupenbefehl)		
494			
495			
496			
497			
498			
499			
500			
501			
502			
503			
504			
505		FELDMERKER FUER GAENDE VOM EAG	
506			
507	Alarm 1 (Hupenbefehl)		
508			
509			
510			
511	Alarm 1 (Hupenbefehl)		
512			

Proprietary data, company confidential. All rights reserved.
Confie a titre de secret d'entreprise. Tous droits réservés.
Comunicado como segredo empresarial. Reservados todos os direitos.
Confiado como secreto industrial. Nos reservamos todos los derechos.

The reproduction, transmission or use of this document or its is not permitted without express written authority.
Offenders will be liable for damages. All rights, including rights created by patent grant or registration of a utility model or design, are reserved

Documentation structur: Standard
Source file: KO050722.ODA

Rev.	Remarks	Date	Name	Date	22.07.2005	VSZ KOSICE	SIEMENS AG ISAOOLS	Substation control system 6MB	T = /BM 50
				Drawn	LANG			Status indications/system indications/reference time	+
				Appr.					
				Norm		Orig./Repl. 1/Repl. by		Table	-S111 Page 50

Proprietary data, company confidential. All rights reserved
Contenu a l'intention de l'entreprise. Tous droits reservés
Comunicado como segredo empresarial. Reservados todos os direitos
Comunicado como secreto industrial. Nos reservamos todos los derechos
The reproduction, transmission or use of this document or its contents is not permitted without express written authority.
Offenders will be liable for damages. All rights, including rights created by patent grant or registration of a utility model or design, are reserved

Line number	Station	Section	Bay	Logical device	Lower limit	Value text	Column section	Column bay	Column logical device	Column information	Column value text	Indication type	Entry in event list	Entry in alarm list	Acknowledge	Display in indication area	Indication class	Entry in SML	Display in diagram	Archive	Operational indications	Protection indications
513	UW KOSICE	GERAETE-STATUSMELDUNGEN	R220 D01 EAG		GA-ENDE-MARKIERUNG							SI	N	N				N	N	N		
514	UW KOSICE	GERAETE-STATUSMELDUNGEN	R220 D01 EAG		NABEHNUTIE		0	22	0	39	0	TR	O	N				N	N	N		
515	UW KOSICE	GERAETE-STATUSMELDUNGEN	R220 D01 EAG		NEPRIPRAVENY	KON ZAC	0	22	0	39	75	SI	R/C	Y	R/C	Y	1	N	N	N		
516	UW KOSICE	GERAETE-STATUSMELDUNGEN	R220 D01 EAG		PORUCHA	KON ZAC	0	22	0	39	75	SI	R/C	Y	R/C	Y	1	N	N	N		
517	UW KOSICE	GERAETE-STATUSMELDUNGEN	R220 D01 EAG		REFERENZZEIT																	
518	UW KOSICE	GERAETE-STATUSMELDUNGEN	R220 D01 EAG		SYSTEMOVA HLASENI		0	36	0	40	0		O							N		
519	UW KOSICE	GERAETE-STATUSMELDUNGEN	R220 D01 EAG		VNUTORNA CHYBA	KON ZAC	0	22	0	39	75	SI	R/C	N				N	N	N		
520	UW KOSICE	GERAETE-STATUSMELDUNGEN	R220 D01 EAG		VYSIEL.BUF.PREPLNENY		0	22	0	39	0	TR	O	N				N	N	N		
521	UW KOSICE	GERAETE-STATUSMELDUNGEN	R220 D01 SK-A1		GA-ENDE-MARKIERUNG							SI	N	N				N	N	N		
522	UW KOSICE	GERAETE-STATUSMELDUNGEN	R220 D01 SK-A1		NABEHNUTIE		0	22	0	39	0	TR	O	N				N	N	N		
523	UW KOSICE	GERAETE-STATUSMELDUNGEN	R220 D01 SK-A1		NEPRIPRAVENY	KON ZAC	0	22	0	39	75	SI	R/C	Y	R/C	Y	1	N	N	N		
524	UW KOSICE	GERAETE-STATUSMELDUNGEN	R220 D01 SK-A1		PORUCHA	KON ZAC	0	22	0	39	75	SI	R/C	Y	R/C	Y	1	N	N	N		
525	UW KOSICE	GERAETE-STATUSMELDUNGEN	R220 D01 SK-A1		REFERENZZEIT																	
526	UW KOSICE	GERAETE-STATUSMELDUNGEN	R220 D01 SK-A1		SYSTEMOVA HLASENI		0	36	0	40	0		O							N		
527	UW KOSICE	GERAETE-STATUSMELDUNGEN	R220 D01 SK-A1		VYSIEL.BUF.PREPLNENY		0	22	0	39	0	TR	O	N				N	N	N		
528	UW KOSICE	GERAETE-STATUSMELDUNGEN	R220 D02 EAG		GA-ENDE-MARKIERUNG							SI	N	N				N	N	N		
529	UW KOSICE	GERAETE-STATUSMELDUNGEN	R220 D02 EAG		NABEHNUTIE		0	22	0	39	0	TR	O	N				N	N	N		
530	UW KOSICE	GERAETE-STATUSMELDUNGEN	R220 D02 EAG		NEPRIPRAVENY	KON ZAC	0	22	0	39	75	SI	R/C	Y	R/C	Y	1	N	N	N		
531	UW KOSICE	GERAETE-STATUSMELDUNGEN	R220 D02 EAG		PORUCHA	KON ZAC	0	22	0	39	75	SI	R/C	Y	R/C	Y	1	N	N	N		
532	UW KOSICE	GERAETE-STATUSMELDUNGEN	R220 D02 EAG		REFERENZZEIT																	
533	UW KOSICE	GERAETE-STATUSMELDUNGEN	R220 D02 EAG		SYSTEMOVA HLASENI		0	36	0	40	0		O							N		
534	UW KOSICE	GERAETE-STATUSMELDUNGEN	R220 D02 EAG		VNUTORNA CHYBA	KON ZAC	0	22	0	39	75	SI	R/C	N				N	N	N		
535	UW KOSICE	GERAETE-STATUSMELDUNGEN	R220 D02 EAG		VYSIEL.BUF.PREPLNENY		0	22	0	39	0	TR	O	N				N	N	N		
536	UW KOSICE	GERAETE-STATUSMELDUNGEN	R220 D02 SK-A1		GA-ENDE-MARKIERUNG							SI	N	N				N	N	N		
537	UW KOSICE	GERAETE-STATUSMELDUNGEN	R220 D02 SK-A1		NABEHNUTIE		0	22	0	39	0	TR	O	N				N	N	N		
538	UW KOSICE	GERAETE-STATUSMELDUNGEN	R220 D02 SK-A1		NEPRIPRAVENY	KON ZAC	0	22	0	39	75	SI	R/C	Y	R/C	Y	1	N	N	N		
539	UW KOSICE	GERAETE-STATUSMELDUNGEN	R220 D02 SK-A1		PORUCHA	KON ZAC	0	22	0	39	75	SI	R/C	Y	R/C	Y	1	N	N	N		
540	UW KOSICE	GERAETE-STATUSMELDUNGEN	R220 D02 SK-A1		REFERENZZEIT																	
541	UW KOSICE	GERAETE-STATUSMELDUNGEN	R220 D02 SK-A1		SYSTEMOVA HLASENI		0	36	0	40	0		O							N		
542	UW KOSICE	GERAETE-STATUSMELDUNGEN	R220 D02 SK-A1		VYSIEL.BUF.PREPLNENY		0	22	0	39	0	TR	O	N				N	N	N		
543	UW KOSICE	GERAETE-STATUSMELDUNGEN	R220 DA01 7SA513		GA-ENDE-MARKIERUNG							SI	N	N				N	N	N		
544	UW KOSICE	GERAETE-STATUSMELDUNGEN	R220 DA01 7SA513		NABEHNUTIE		0	22	0	39	0	TR	O	N				N	N	N		

Documentation structur: Standard
Source file: KO050722.ODA

Date 22.07.2005
Drawn LANG
Appr.
Norm

VSZ KOSICE

SIEMENS AG
ISATOOLS

Substation control system 6MB
Status indications/system indications/reference time
Table

T = /BM 51
+
-S111
Page

Remarks | Date | Name | Orig./Repl. 1/Repl. by

Proprietary data, company confidential. All rights reserved.
Confie a litre de secret d'entreprise. Tous droits r.serv.s.
Comunicado como segredo empresarial. Reservados todos os direitos.
Confiado como secreto industrial. Nos reservamos todos los derechos.

The reproduction, transmission or use of this document or its
is not permitted without express written authority.
Offenders will be liable for damages. All rights, including rights
created by patent grant or registration of a utility model or design, are reserved.

Documentation structur: Standard
Source file: KO050722.ODA

Line number	Command derivation	Indication derivation	
513			
514			
515			
516			
517			
518			
519			
520			
521			
522			
523			
524			
525			
526			
527			
528			
529			
530			
531			
532			
533			
534			
535			
536			
537			
538			
539			
540			
541			
542			
543			
544			

Rev.	Remarks	Date	Name	Date	22.07.2005	VSZ KOSICE	SIEMENS AG ISAOOLS	Substation control system 6MB Status indications/system indications/reference time	T = /BM 52
				Drawn	LANG				+
				Appr.					-S111 Page 52
				Norm		Orig./Repl. 1/Repl. by		Table	

Proprietary data, company confidential. All rights reserved
Confia a tire da secret d'entreprise. Tous droits reservs.
Comunicado como segredo empresarial. Reservados todos os direitos.
Confiado como secreto industrial. Nos reservamos todos los derechos.

The reproduction, transmission or use of this document or its
is not permitted without expres written authority.
Offenders will be liable for damages. All rights, including rights
created by patent grant or registration of a utility model or design, are reserved

Line number	Station	Section	Bay	Logical device	Lower limit	Value text	Column section	Column bay	Column logical device	Column information	Column value text	Indication type	Entry in event list	Entry in alarm list	Acknowledge	Display in indication area	Indication class	Entry in SML	Display in diagram	Archive	Operational indications	Protection indications
545	UW KOSICE	GERAETE-STATUSMELDUNGEN	R220 DA01 7SA513		NEPRIPRAVENY	KON ZAC	0	22	0	39	75	SI	R/C	Y	R/C	Y	1	N	N	N		
546	UW KOSICE	GERAETE-STATUSMELDUNGEN	R220 DA01 7SA513		PORUCHA	KON ZAC	0	22	0	39	75	SI	R/C	Y	R/C	Y	1	N	N	N		
547	UW KOSICE	GERAETE-STATUSMELDUNGEN	R220 DA01 7SA513		REFERENZZEIT																	
548	UW KOSICE	GERAETE-STATUSMELDUNGEN	R220 DA01 7SJ512		GA-ENDE-MARKIERUNG							SI	N	N				N	N	N		
549	UW KOSICE	GERAETE-STATUSMELDUNGEN	R220 DA01 7SJ512		NABEHNUTIE		0	22	0	39	0	TR	O	N				N	N	N		
550	UW KOSICE	GERAETE-STATUSMELDUNGEN	R220 DA01 7SJ512		NEPRIPRAVENY	KON ZAC	0	22	0	39	75	SI	R/C	Y	R/C	Y	1	N	N	N		
551	UW KOSICE	GERAETE-STATUSMELDUNGEN	R220 DA01 7SJ512		PORUCHA	KON ZAC	0	22	0	39	75	SI	R/C	Y	R/C	Y	1	N	N	N		
552	UW KOSICE	GERAETE-STATUSMELDUNGEN	R220 DA01 7SJ512		REFERENZZEIT																	
553	UW KOSICE	GERAETE-STATUSMELDUNGEN	R220 DA01 7UT513		GA-ENDE-MARKIERUNG							SI	N	N				N	N	N		
554	UW KOSICE	GERAETE-STATUSMELDUNGEN	R220 DA01 7UT513		NABEHNUTIE		0	22	0	39	0	TR	O	N				N	N	N		
555	UW KOSICE	GERAETE-STATUSMELDUNGEN	R220 DA01 7UT513		NEPRIPRAVENY	KON ZAC	0	22	0	39	75	SI	R/C	Y	R/C	Y	1	N	N	N		
556	UW KOSICE	GERAETE-STATUSMELDUNGEN	R220 DA01 7UT513		PORUCHA	KON ZAC	0	22	0	39	75	SI	R/C	Y	R/C	Y	1	N	N	N		
557	UW KOSICE	GERAETE-STATUSMELDUNGEN	R220 DA01 7UT513		REFERENZZEIT																	
558	UW KOSICE	GERAETE-STATUSMELDUNGEN	R220 DA02 7SA513		GA-ENDE-MARKIERUNG							SI	N	N				N	N	N		
559	UW KOSICE	GERAETE-STATUSMELDUNGEN	R220 DA02 7SA513		NABEHNUTIE		0	22	0	39	0	TR	O	N				N	N	N		
560	UW KOSICE	GERAETE-STATUSMELDUNGEN	R220 DA02 7SA513		NEPRIPRAVENY	KON ZAC	0	22	0	39	75	SI	R/C	Y	R/C	Y	1	N	N	N		
561	UW KOSICE	GERAETE-STATUSMELDUNGEN	R220 DA02 7SA513		PORUCHA	KON ZAC	0	22	0	39	75	SI	R/C	Y	R/C	Y	1	N	N	N		
562	UW KOSICE	GERAETE-STATUSMELDUNGEN	R220 DA02 7SA513		REFERENZZEIT																	
563	UW KOSICE	GERAETE-STATUSMELDUNGEN	R220 DA02 7SJ512		GA-ENDE-MARKIERUNG							SI	N	N				N	N	N		
564	UW KOSICE	GERAETE-STATUSMELDUNGEN	R220 DA02 7SJ512		NABEHNUTIE		0	22	0	39	0	TR	O	N				N	N	N		
565	UW KOSICE	GERAETE-STATUSMELDUNGEN	R220 DA02 7SJ512		NEPRIPRAVENY	KON ZAC	0	22	0	39	75	SI	R/C	Y	R/C	Y	1	N	N	N		
566	UW KOSICE	GERAETE-STATUSMELDUNGEN	R220 DA02 7SJ512		PORUCHA	KON ZAC	0	22	0	39	75	SI	R/C	Y	R/C	Y	1	N	N	N		
567	UW KOSICE	GERAETE-STATUSMELDUNGEN	R220 DA02 7SJ512		REFERENZZEIT																	
568	UW KOSICE	GERAETE-STATUSMELDUNGEN	R220 DA02 7UT513		GA-ENDE-MARKIERUNG							SI	N	N				N	N	N		
569	UW KOSICE	GERAETE-STATUSMELDUNGEN	R220 DA02 7UT513		NABEHNUTIE		0	22	0	39	0	TR	O	N				N	N	N		
570	UW KOSICE	GERAETE-STATUSMELDUNGEN	R220 DA02 7UT513		NEPRIPRAVENY	KON ZAC	0	22	0	39	75	SI	R/C	Y	R/C	Y	1	N	N	N		
571	UW KOSICE	GERAETE-STATUSMELDUNGEN	R220 DA02 7UT513		PORUCHA	KON ZAC	0	22	0	39	75	SI	R/C	Y	R/C	Y	1	N	N	N		
572	UW KOSICE	GERAETE-STATUSMELDUNGEN	R220 DA02 7UT513		REFERENZZEIT																	
573	UW KOSICE	GERAETE-STATUSMELDUNGEN	SG1		PORUCHA	KON ZAC	0	22	0	39	75	SI	R/C	N				N	N	N		
574	UW KOSICE	GERAETE-STATUSMELDUNGEN	SG1		REFERENZZEIT																	
575	UW KOSICE	GERAETE-STATUSMELDUNGEN	SG2		PORUCHA	KON ZAC	0	22	0	39	75	SI	R/C	N				N	N	N		
576	UW KOSICE	GERAETE-STATUSMELDUNGEN	SG2		REFERENZZEIT																	

Documentation structur: Standard
Source file: K0050722.ODA

Date	22.07.2005	VSZ KOSICE	SIEMENS AG ISATOOLS
Drawn	LANG		
Appr.			
Norm		Orig./Repl. 1/Repl. by	

Substation control system 6MB
Status indications/system indications/reference time
Table

T = /BM 53
+
-S111
Page

Remarks | Date | Name

Line number	Command derivation	Indication derivation	
545			
546			
547			
548			
549			
550			
551			
552			
553			
554			
555			
556			
557			
558			
559			
560			
561			
562			
563			
564			
565			
566			
567			
568			
569			
570			
571			
572			
573			
574			
575			
576			

Proprietary data, company confidential. All rights reserved
Confie a titre de secret d'entreprise. Tous droits réservés.
Comunicado como segredo empresarial. Reservados todos os direitos.
Confiado como secreto industrial. Nos reservamos todos los derechos.

The reproduction, transmission or use of this document or its is not permitted without expres written authority. Offenders will be liable for damages. All rights, including rights created by patent grant or registration of a utility model or design, are reserved

Documentation structur: Standard
Source file: KO050722.ODA

Rev.	Remarks	Date	Name	Date	22.07.2005	VSZ KOSICE	SIEMENS AG ISA TOOLS	Substation control system 6MB Status indications/system indications/reference time	T = /BM 54
				Drawn	LANG				+
				Appr.					
				Norm		Orig./Repl. 1/Repl. by		Table	-S111 Page 54

Line number	Station	Section	Bay	Logical device	Lower limit	Value text	Column section	Column bay	Column logical device	Column information	Column value text	Indication type	Entry in event list	Entry in alarm list	Acknowledge	Display in indication area	Indication class	Entry in SML	Display in diagram	Archive	Operational indications	Protection indications
577	UW KOSICE	GERAETE-STATUSMELDUNGEN	TISKARNA		PORUCHA	KON ZAC	0	22	0	39	75	SI	R/C	N				N	N	N		
578	UW KOSICE	GERAETE-STATUSMELDUNGEN	TISKARNA		REFERENZZEIT																	

Proprietary data, company confidential. All rights reserved.
Confia a titre de secret d'entreprise. Tous droits réservés.
Comunicado como segredo empresarial. Reservados todos os direitos.
Confiado como secreto industrial. Nos reservamos todos los derechos.

The reproduction, transmission or use of theis document or its is not permitted without express written authority.
Offenders will be liable for damages. All rights, including rights created by patent grant or registration of a utility model or design, are reserved.

Documentation structur: Standard
Source file: KO050722.ODA

			Date	22.07.2005	VSZ KOSICE	SIEMENS AG ISAOOLS	Substation control system 6MB Status indications/system indications/reference time	T = /BM 55
			Drawn	LANG				+
			Appr.					-S111
F	Remarks	Date	Name	Norm	Orig./Repl. 1/Repl. by		Table	Page 5

Line number	Command derivation	Indication derivation
577		
578		

Proprietary data, company confidential. All rights reserved.
Confie a titre de secret d'entreprise. Tous droits r,serv,s.
Comunicado como segredo empresarial. Reservados todos os direitos.
Confiado como secreto industrial. Nos reservamos todos los derechos.

The reproduction, transmission or use of this document or its is not permitted without expres written authority.
Offenders will be liable for damages. All rights, including rights created by patent grant or registration of a utility model or design, are reserved.

Documentation structur: Standard
Source file: KO050722.ODA

Rev.	Remarks	Date	Name	Date	22.07.2005	VSZ KOSICE	SIEMENS AG ISAOOLS	Substation control system 6MB	T = /BM 56
				Drawn	LANG			Status indications/system indications/reference time	+
				Appr.					-S111 Page 56
				Norm		Orig./Repl. 1/Repl. by		Table	

Proprietary data, company confidential. All rights reserved
Confia a tire de secret d'entreprise. Tous droits reservs.
Comunicado como segredo empressarial Reservados todos os direitos.
Confiado como secreto industrial Nos reservamos todos los derechos.

The reproduction, transmission or use of this document or its contents is not permitted without express written authority. Offenders will be liable for damages. All rights, including rights created by patent grant or registration of a utility model or design, are reserved.

Documentation structur: Standard
Source file: K0050722.ODA

Line number	Station	Section	Bay	Logical device	Lower limit	Value text	Column section	Column bay	Column logical device	Column information	Column value text	Monitoring function	Meldetextzusatz	Original infomation	Anzeige im Bild des 6MB524	Entry in event list
1	UW KOSICE	R110	EA01	MESSW. SPANNUNG W1	NAPATIE L1-L2 DH1	KON ZAC	22	27	0	39	75	Lower limit 1	DH1	NAPATIE L1-L2	PV	R/C
2	UW KOSICE	R110	EA01	MESSW. SPANNUNG W1	NAPATIE L1-L2 HH1	KON ZAC	22	27	0	39	75	Upper limit 1	HH1	NAPATIE L1-L2	PV	R/C
3	UW KOSICE	R110	EA01	MESSW. SPANNUNG W1	NAPATIE L1-L3 DH1	KON ZAC	22	27	0	39	75	Lower limit 1	DH1	NAPATIE L1-L3	PV	R/C
4	UW KOSICE	R110	EA01	MESSW. SPANNUNG W1	NAPATIE L1-L3 HH1	KON ZAC	22	27	0	39	75	Upper limit 1	HH1	NAPATIE L1-L3	PV	R/C
5	UW KOSICE	R110	EA01	MESSW. SPANNUNG W1	NAPATIE L2-L3 DH1	KON ZAC	22	27	0	39	75	Lower limit 1	DH1	NAPATIE L2-L3	PV	R/C
6	UW KOSICE	R110	EA01	MESSW. SPANNUNG W1	NAPATIE L2-L3 HH1	KON ZAC	22	27	0	39	75	Upper limit 1	HH1	NAPATIE L2-L3	PV	R/C
7	UW KOSICE	R110	EA01	MESSW. SPANNUNG W2	NAPATIE L1-L2 DH1	KON ZAC	22	27	0	39	75	Lower limit 1	DH1	NAPATIE L1-L2	PV	R/C
8	UW KOSICE	R110	EA01	MESSW. SPANNUNG W2	NAPATIE L1-L2 HH1	KON ZAC	22	27	0	39	75	Upper limit 1	HH1	NAPATIE L1-L2	PV	R/C
9	UW KOSICE	R110	EA01	MESSW. SPANNUNG W2	NAPATIE L1-L3 DH1	KON ZAC	22	27	0	39	75	Lower limit 1	DH1	NAPATIE L1-L3	PV	R/C
10	UW KOSICE	R110	EA01	MESSW. SPANNUNG W2	NAPATIE L1-L3 HH1	KON ZAC	22	27	0	39	75	Upper limit 1	HH1	NAPATIE L1-L3	PV	R/C
11	UW KOSICE	R110	EA01	MESSW. SPANNUNG W2	NAPATIE L2-L3 DH1	KON ZAC	22	27	0	39	75	Lower limit 1	DH1	NAPATIE L2-L3	PV	R/C
12	UW KOSICE	R110	EA01	MESSW. SPANNUNG W2	NAPATIE L2-L3 HH1	KON ZAC	22	27	0	39	75	Upper limit 1	HH1	NAPATIE L2-L3	PV	R/C
13	UW KOSICE	R110	EA02	MESSWERTE SPANNUNG	NAPATIE L1 DH1	KON ZAC	22	27	0	39	75	Lower limit 1	DH1	NAPATIE L1	PV	R/C
14	UW KOSICE	R110	EA02	MESSWERTE SPANNUNG	NAPATIE L1 HH1	KON ZAC	22	27	0	39	75	Upper limit 1	HH1	NAPATIE L1	PV	R/C
15	UW KOSICE	R110	EA02	MESSWERTE STROM	PRUD L1 HH1	KON ZAC	22	27	0	39	75	Upper limit 1	HH1	PRUD L1	PV	R/C
16	UW KOSICE	R110	EA02	MESSWERTE STROM	PRUD L2 HH1	KON ZAC	22	27	0	39	75	Upper limit 1	HH1	PRUD L2	PV	R/C
17	UW KOSICE	R110	EA02	MESSWERTE STROM	PRUD L3 HH1	KON ZAC	22	27	0	39	75	Upper limit 1	HH1	PRUD L3	PV	R/C
18	UW KOSICE	R110	EA03	MESSWERTE SPANNUNG	NAPATIE L1 DH1	KON ZAC	22	27	0	39	75	Lower limit 1	DH1	NAPATIE L1	PV	R/C
19	UW KOSICE	R110	EA03	MESSWERTE SPANNUNG	NAPATIE L1 HH1	KON ZAC	22	27	0	39	75	Upper limit 1	HH1	NAPATIE L1	PV	R/C
20	UW KOSICE	R110	EA03	MESSWERTE STROM	PRUD L1 HH1	KON ZAC	22	27	0	39	75	Upper limit 1	HH1	PRUD L1	PV	R/C
21	UW KOSICE	R110	EA03	MESSWERTE STROM	PRUD L2 HH1	KON ZAC	22	27	0	39	75	Upper limit 1	HH1	PRUD L2	PV	R/C
22	UW KOSICE	R110	EA03	MESSWERTE STROM	PRUD L3 HH1	KON ZAC	22	27	0	39	75	Upper limit 1	HH1	PRUD L3	PV	R/C
23	UW KOSICE	R110	EA04	MESSWERTE SPANNUNG	NAPATIE L1 DH1	KON ZAC	22	27	0	39	75	Lower limit 1	DH1	NAPATIE L1	PV	R/C
24	UW KOSICE	R110	EA04	MESSWERTE SPANNUNG	NAPATIE L1 HH1	KON ZAC	22	27	0	39	75	Upper limit 1	HH1	NAPATIE L1	PV	R/C
25	UW KOSICE	R110	EA04	MESSWERTE STROM	PRUD L1 HH1	KON ZAC	22	27	0	39	75	Upper limit 1	HH1	PRUD L1	PV	R/C
26	UW KOSICE	R110	EA04	MESSWERTE STROM	PRUD L2 HH1	KON ZAC	22	27	0	39	75	Upper limit 1	HH1	PRUD L2	PV	R/C
27	UW KOSICE	R110	EA04	MESSWERTE STROM	PRUD L3 HH1	KON ZAC	22	27	0	39	75	Upper limit 1	HH1	PRUD L3	PV	R/C
28	UW KOSICE	R110	EA05	MESSWERTE SPANNUNG	NAPATIE L1 DH1	KON ZAC	22	27	0	39	75	Lower limit 1	DH1	NAPATIE L1	PV	R/C
29	UW KOSICE	R110	EA05	MESSWERTE SPANNUNG	NAPATIE L1 HH1	KON ZAC	22	27	0	39	75	Upper limit 1	HH1	NAPATIE L1	PV	R/C
30	UW KOSICE	R110	EA05	MESSWERTE STROM	PRUD L1 HH1	KON ZAC	22	27	0	39	75	Upper limit 1	HH1	PRUD L1	PV	R/C
31	UW KOSICE	R110	EA05	MESSWERTE STROM	PRUD L2 HH1	KON ZAC	22	27	0	39	75	Upper limit 1	HH1	PRUD L2	PV	R/C
32	UW KOSICE	R110	EA05	MESSWERTE STROM	PRUD L3 HH1	KON ZAC	22	27	0	39	75	Upper limit 1	HH1	PRUD L3	PV	R/C

Date	22.07.2005	VSZ KOSICE	SIEMENS AG ISAOOLS
Drawn	LANG		
Appr.			
Norm			
Remarks	Date	Name	Orig./Repl. 1/Repl. by

Substation control system 6MB
Monitoring indications
Table

T = /BM 57
+
-S111
Page

Line number	Entry in alarm list	Acknowledge	Display in indication area	Indication class	Entry in SML	Display in diagram	Archive	Operational indications	Protection indications	Command derivation	Weiterleiten an LSANET / LSA WinCC
1	Y	R/C	Y	1	N	N	R/C	Y	N	Alarm 1 (Hupenbefehl)	N
2	Y	R/C	Y	1	N	N	R/C	Y	N	Alarm 1 (Hupenbefehl)	N
3	Y	R/C	Y	1	N	N	R/C	Y	N	Alarm 1 (Hupenbefehl)	N
4	Y	R/C	Y	1	N	N	R/C	Y	N	Alarm 1 (Hupenbefehl)	N
5	Y	R/C	Y	1	N	N	R/C	Y	N	Alarm 1 (Hupenbefehl)	N
6	Y	R/C	Y	1	N	N	R/C	Y	N	Alarm 1 (Hupenbefehl)	N
7	Y	R/C	Y	1	N	N	R/C	Y	N	Alarm 1 (Hupenbefehl)	N
8	Y	R/C	Y	1	N	N	R/C	Y	N	Alarm 1 (Hupenbefehl)	N
9	Y	R/C	Y	1	N	N	R/C	Y	N	Alarm 1 (Hupenbefehl)	N
10	Y	R/C	Y	1	N	N	R/C	Y	N	Alarm 1 (Hupenbefehl)	N
11	Y	R/C	Y	1	N	N	R/C	Y	N	Alarm 1 (Hupenbefehl)	N
12	Y	R/C	Y	1	N	N	R/C	Y	N	Alarm 1 (Hupenbefehl)	N
13	Y	R/C	Y	1	N	N	R/C	Y	N	Alarm 1 (Hupenbefehl)	N
14	Y	R/C	Y	1	N	N	R/C	Y	N	Alarm 1 (Hupenbefehl)	N
15	Y	R/C	Y	1	N	N	R/C	Y	N	Alarm 1 (Hupenbefehl)	N
16	Y	R/C	Y	1	N	N	R/C	Y	N	Alarm 1 (Hupenbefehl)	N
17	Y	R/C	Y	1	N	N	R/C	Y	N	Alarm 1 (Hupenbefehl)	N
18	Y	R/C	Y	1	N	N	R/C	Y	N	Alarm 1 (Hupenbefehl)	N
19	Y	R/C	Y	1	N	N	R/C	Y	N	Alarm 1 (Hupenbefehl)	N
20	Y	R/C	Y	1	N	N	R/C	Y	N	Alarm 1 (Hupenbefehl)	N
21	Y	R/C	Y	1	N	N	R/C	Y	N	Alarm 1 (Hupenbefehl)	N
22	Y	R/C	Y	1	N	N	R/C	Y	N	Alarm 1 (Hupenbefehl)	N
23	Y	R/C	Y	1	N	N	R/C	Y	N	Alarm 1 (Hupenbefehl)	N
24	Y	R/C	Y	1	N	N	R/C	Y	N	Alarm 1 (Hupenbefehl)	N
25	Y	R/C	Y	1	N	N	R/C	Y	N	Alarm 1 (Hupenbefehl)	N
26	Y	R/C	Y	1	N	N	R/C	Y	N	Alarm 1 (Hupenbefehl)	N
27	Y	R/C	Y	1	N	N	R/C	Y	N	Alarm 1 (Hupenbefehl)	N
28	Y	R/C	Y	1	N	N	R/C	Y	N	Alarm 1 (Hupenbefehl)	N
29	Y	R/C	Y	1	N	N	R/C	Y	N	Alarm 1 (Hupenbefehl)	N
30	Y	R/C	Y	1	N	N	R/C	Y	N	Alarm 1 (Hupenbefehl)	N
31	Y	R/C	Y	1	N	N	R/C	Y	N	Alarm 1 (Hupenbefehl)	N
32	Y	R/C	Y	1	N	N	R/C	Y	N	Alarm 1 (Hupenbefehl)	N

Proprietary data, company confidential. All rights reserved.
Confie a titre de secret d'entreprise. Tous droits réservés.
Comunicado como segredo empresarial. Reservados todos os direitos.
Confiado como secreto industrial. Nos reservamos todos los derechos.

The reproduction, transmission or use of this document or its contents is not permitted without express written authority. Offenders will be liable for damages. All rights, including rights created by patent grant or registration of a utility model or design, are reserved.

Documentation structur: Standard
Source file: KO050722.ODA

Rev.	Remarks	Date	Name	Date	22.07.2005	VSZ KOSICE	SIEMENS AG ISAOOLS	Substation control system 6MB Monitoring indications	T = /BM 58
				Drawn	LANG				+
				Appr.					-S111 Page 58
				Norm		Orig./Repl. 1/Repl. by		Table	

Proprietary data, company confidential. All rights reserved
Confiado a otra de secreto de empresa. Todos los derechos reservados
Comunicado como segredo empresarial. Reservados todos os direitos.
Confiado como secreto industrial. Nos reservamos todos los derechos.

The reproduction, transmission or use of this document or its contents is not permitted without express written authority. Offenders will be liable for damages. All rights, including rights created by patent grant or registration of a utility model or design, are reserved

Line number	Station	Section	Bay	Logical device	Lower limit	Value text	Column section	Column bay	Column logical device	Column information	Column value text	Monitoring function	Meldetextzusatz	Original infomation	Anzeige im Bild des 6MB524	Entry in event list
33	UW KOSICE	R110	EA06	MESSWERTE STROM	PRUD L1 HH1	KON ZAC	22	27	0	39	75	Upper limit 1	HH1	PRUD L1	PV	R/C
34	UW KOSICE	R110	EA06	MESSWERTE STROM	PRUD L2 HH1	KON ZAC	22	27	0	39	75	Upper limit 1	HH1	PRUD L2	PV	R/C
35	UW KOSICE	R110	EA06	MESSWERTE STROM	PRUD L3 HH1	KON ZAC	22	27	0	39	75	Upper limit 1	HH1	PRUD L3	PV	R/C
36	UW KOSICE	R110	EA07	MESSWERTE SPANNUNG	NAPATIE L1 DH1	KON ZAC	22	27	0	39	75	Lower limit 1	DH1	NAPATIE L1	PV	R/C
37	UW KOSICE	R110	EA07	MESSWERTE SPANNUNG	NAPATIE L1 HH1	KON ZAC	22	27	0	39	75	Upper limit 1	HH1	NAPATIE L1	PV	R/C
38	UW KOSICE	R110	EA07	MESSWERTE STROM	PRUD L1 HH1	KON ZAC	22	27	0	39	75	Upper limit 1	HH1	PRUD L1	PV	R/C
39	UW KOSICE	R110	EA07	MESSWERTE STROM	PRUD L2 HH1	KON ZAC	22	27	0	39	75	Upper limit 1	HH1	PRUD L2	PV	R/C
40	UW KOSICE	R110	EA07	MESSWERTE STROM	PRUD L3 HH1	KON ZAC	22	27	0	39	75	Upper limit 1	HH1	PRUD L3	PV	R/C
41	UW KOSICE	R110	EA08	MESSWERTE STROM	PRUD L1 HH1	KON ZAC	22	27	0	39	75	Upper limit 1	HH1	PRUD L1	PV	R/C
42	UW KOSICE	R110	EA08	MESSWERTE STROM	PRUD L2 HH1	KON ZAC	22	27	0	39	75	Upper limit 1	HH1	PRUD L2	PV	R/C
43	UW KOSICE	R110	EA08	MESSWERTE STROM	PRUD L3 HH1	KON ZAC	22	27	0	39	75	Upper limit 1	HH1	PRUD L3	PV	R/C
44	UW KOSICE	R110	EA09	MESSWERTE SPANNUNG	NAPATIE L1 DH1	KON ZAC	22	27	0	39	75	Lower limit 1	DH1	NAPATIE L1	PV	R/C
45	UW KOSICE	R110	EA09	MESSWERTE SPANNUNG	NAPATIE L1 DH2	KON ZAC	22	27	0	39	75	Lower limit 2	DH2	NAPATIE L1	PV	R/C
46	UW KOSICE	R110	EA09	MESSWERTE SPANNUNG	NAPATIE L1 HH1	KON ZAC	22	27	0	39	75	Upper limit 1	HH1	NAPATIE L1	PV	R/C
47	UW KOSICE	R110	EA09	MESSWERTE STROM	PRUD L1 HH1	KON ZAC	22	27	0	39	75	Upper limit 1	HH1	PRUD L1	PV	R/C
48	UW KOSICE	R110	EA09	MESSWERTE STROM	PRUD L2 HH1	KON ZAC	22	27	0	39	75	Upper limit 1	HH1	PRUD L2	PV	R/C
49	UW KOSICE	R110	EA09	MESSWERTE STROM	PRUD L3 HH1	KON ZAC	22	27	0	39	75	Upper limit 1	HH1	PRUD L3	PV	R/C
50	UW KOSICE	R110	EA10	MESSWERTE STROM	PRUD L1 HH1	KON ZAC	22	27	0	39	75	Upper limit 1	HH1	PRUD L1	PV	R/C
51	UW KOSICE	R110	EA10	MESSWERTE STROM	PRUD L2 HH1	KON ZAC	22	27	0	39	75	Upper limit 1	HH1	PRUD L2	PV	R/C
52	UW KOSICE	R110	EA10	MESSWERTE STROM	PRUD L3 HH1	KON ZAC	22	27	0	39	75	Upper limit 1	HH1	PRUD L3	PV	R/C
53	UW KOSICE	R110	EA11	MESSWERTE SPANNUNG	NAPATIE L1 DH1	KON ZAC	22	27	0	39	75	Lower limit 1	DH1	NAPATIE L1	PV	R/C
54	UW KOSICE	R110	EA11	MESSWERTE SPANNUNG	NAPATIE L1 DH2	KON ZAC	22	27	0	39	75	Lower limit 2	DH2	NAPATIE L1	PV	R/C
55	UW KOSICE	R110	EA11	MESSWERTE SPANNUNG	NAPATIE L1 HH1	KON ZAC	22	27	0	39	75	Upper limit 1	HH1	NAPATIE L1	PV	R/C
56	UW KOSICE	R110	EA11	MESSWERTE STROM	PRUD L1 HH1	KON ZAC	22	27	0	39	75	Upper limit 1	HH1	PRUD L1	PV	R/C
57	UW KOSICE	R110	EA11	MESSWERTE STROM	PRUD L2 HH1	KON ZAC	22	27	0	39	75	Upper limit 1	HH1	PRUD L2	PV	R/C
58	UW KOSICE	R110	EA11	MESSWERTE STROM	PRUD L3 HH1	KON ZAC	22	27	0	39	75	Upper limit 1	HH1	PRUD L3	PV	R/C
59	UW KOSICE	R110	EA12	MESSWERTE STROM	PRUD L1 HH1	KON ZAC	22	27	0	39	75	Upper limit 1	HH1	PRUD L1	PV	R/C
60	UW KOSICE	R110	EA12	MESSWERTE STROM	PRUD L2 HH1	KON ZAC	22	27	0	39	75	Upper limit 1	HH1	PRUD L2	PV	R/C
61	UW KOSICE	R110	EA12	MESSWERTE STROM	PRUD L3 HH1	KON ZAC	22	27	0	39	75	Upper limit 1	HH1	PRUD L3	PV	R/C
62	UW KOSICE	R110	EA13	MESSWERTE SPANNUNG	NAPATIE L1-L2 DH1	KON ZAC	22	27	0	39	75	Lower limit 1	DH1	NAPATIE L1-L2	PV	R/C
63	UW KOSICE	R110	EA13	MESSWERTE SPANNUNG	NAPATIE L1-L2 DH2	KON ZAC	22	27	0	39	75	Lower limit 2	DH2	NAPATIE L1-L2	PV	R/C
64	UW KOSICE	R110	EA13	MESSWERTE SPANNUNG	NAPATIE L1-L2 HH1	KON ZAC	22	27	0	39	75	Upper limit 1	HH1	NAPATIE L1-L2	PV	R/C

Documentation structur: Standard
Source file: KO050722.ODA

Date	22.07.2005	VSZ KOSICE	SIEMENS AG ISATOOLS
Drawn	LANG		
Appr.			
Norm		Orig./Repl. 1/Repl. by	

Substation control system 6MB
Monitoring indications
Table

T = /BM 59
+
-S111
Page 59

Remarks | Date | Name

Line number	Entry in alarm list	Acknowledge	Display in indication area	Indication class	Entry in SML	Display in diagram	Archive	Operational indications	Protection indications	Command derivation	Weiterleiten an LSANET / LSA WinCC
33	Y	R/C	Y	1	N	N	R/C	Y	N	Alarm 1 (Hupenbefehl)	N
34	Y	R/C	Y	1	N	N	R/C	Y	N	Alarm 1 (Hupenbefehl)	N
35	Y	R/C	Y	1	N	N	R/C	Y	N	Alarm 1 (Hupenbefehl)	N
36	Y	R/C	Y	1	N	N	R/C	Y	N	Alarm 1 (Hupenbefehl)	N
37	Y	R/C	Y	1	N	N	R/C	Y	N	Alarm 1 (Hupenbefehl)	N
38	Y	R/C	Y	1	N	N	R/C	Y	N	Alarm 1 (Hupenbefehl)	N
39	Y	R/C	Y	1	N	N	R/C	Y	N	Alarm 1 (Hupenbefehl)	N
40	Y	R/C	Y	1	N	N	R/C	Y	N	Alarm 1 (Hupenbefehl)	N
41	Y	R/C	Y	1	N	N	R/C	Y	N	Alarm 1 (Hupenbefehl)	N
42	Y	R/C	Y	1	N	N	R/C	Y	N	Alarm 1 (Hupenbefehl)	N
43	Y	R/C	Y	1	N	N	R/C	Y	N	Alarm 1 (Hupenbefehl)	N
44	Y	R/C	Y	1	N	N	R/C	Y	N	Alarm 1 (Hupenbefehl)	N
45	Y	R/C	Y	1	N	N	R/C	Y	N	Alarm 1 (Hupenbefehl)	N
46	Y	R/C	Y	1	N	N	R/C	Y	N	Alarm 1 (Hupenbefehl)	N
47	Y	R/C	Y	1	N	N	R/C	Y	N	Alarm 1 (Hupenbefehl)	N
48	Y	R/C	Y	1	N	N	R/C	Y	N	Alarm 1 (Hupenbefehl)	N
49	Y	R/C	Y	1	N	N	R/C	Y	N	Alarm 1 (Hupenbefehl)	N
50	Y	R/C	Y	1	N	N	R/C	Y	N	Alarm 1 (Hupenbefehl)	N
51	Y	R/C	Y	1	N	N	R/C	Y	N	Alarm 1 (Hupenbefehl)	N
52	Y	R/C	Y	1	N	N	R/C	Y	N	Alarm 1 (Hupenbefehl)	N
53	Y	R/C	Y	1	N	N	R/C	Y	N	Alarm 1 (Hupenbefehl)	N
54	Y	R/C	Y	1	N	N	R/C	Y	N	Alarm 1 (Hupenbefehl)	N
55	Y	R/C	Y	1	N	N	R/C	Y	N	Alarm 1 (Hupenbefehl)	N
56	Y	R/C	Y	1	N	N	R/C	Y	N	Alarm 1 (Hupenbefehl)	N
57	Y	R/C	Y	1	N	N	R/C	Y	N	Alarm 1 (Hupenbefehl)	N
58	Y	R/C	Y	1	N	N	R/C	Y	N	Alarm 1 (Hupenbefehl)	N
59	Y	R/C	Y	1	N	N	R/C	Y	N	Alarm 1 (Hupenbefehl)	N
60	Y	R/C	Y	1	N	N	R/C	Y	N	Alarm 1 (Hupenbefehl)	N
61	Y	R/C	Y	1	N	N	R/C	Y	N	Alarm 1 (Hupenbefehl)	N
62	Y	R/C	Y	1	N	N	R/C	Y	N	Alarm 1 (Hupenbefehl)	N
63	Y	R/C	Y	1	N	N	R/C	Y	N	Alarm 1 (Hupenbefehl)	N
64	Y	R/C	Y	1	N	N	R/C	Y	N	Alarm 1 (Hupenbefehl)	N

Proprietary data, company confidential. All rights reserved.
Confie a titre de secret d'entreprise. Tous droits reservés.
Comunicado como segredo empresarial. Reservados todos os direitos.
Confiado como secreto industrial. Nos reservamos todos los derechos.

The reproduction, transmission or use of this document or its contents is not permitted without express written authority.
Offenders will be liable for damages. All rights, including rights created by patent grant or registration of a utility model or design, are reserved.

Documentation structur: Standard
Source file: KO050722.ODA

Rev.	Remarks	Date	Name	Date	22.07.2005	VSZ KOSICE	SIEMENS AG ISAOOLS	Substation control system 6MB Monitoring indications	T = /BM 60
				Drawn	LANG				+
				Appr.					-S111
				Norm		Orig./Repl. 1/Repl. by		Table	Page 60

Proprietary data, company confidential. All rights reserved.
Confiado a tiro da secret dentreprise. Tous droits reservis.
Comunicado como segredo empresarial. Reservados todos os direitos.
Confiado como secreto industrial. Nos reservamos todos los derechos.

The reproduction, transmission or use of this document or its is not permitted without express written authority.
Offenders will be liable for damages. All rights, including rights created by patent grant or registration of a utility model or design, are reserved.

Line number	Station	Section	Bay	Logical device	Lower limit	Value text	Column section	Column bay	Column logical device	Column information	Column value text	Monitoring function	Meldetextzusatz	Original infomation	Anzeige im Bild des 6MB524	Entry in event list
65	UW KOSICE	R110	EA13	MESSWERTE SPANNUNG	NAPATIE L1-L3 DH1	KON ZAC	22	27	0	39	75	Lower limit 1	DH1	NAPATIE L1-L3	PV	R/C
66	UW KOSICE	R110	EA13	MESSWERTE SPANNUNG	NAPATIE L1-L3 HH1	KON ZAC	22	27	0	39	75	Upper limit 1	HH1	NAPATIE L1-L3	PV	R/C
67	UW KOSICE	R110	EA13	MESSWERTE SPANNUNG	NAPATIE L2-L3 DH1	KON ZAC	22	27	0	39	75	Lower limit 1	DH1	NAPATIE L2-L3	PV	R/C
68	UW KOSICE	R110	EA13	MESSWERTE SPANNUNG	NAPATIE L2-L3 HH1	KON ZAC	22	27	0	39	75	Upper limit 1	HH1	NAPATIE L2-L3	PV	R/C
69	UW KOSICE	R110	EA13	MESSWERTE STROM	PRUD L1 HH1	KON ZAC	22	27	0	39	75	Upper limit 1	HH1	PRUD L1	PV	R/C
70	UW KOSICE	R110	EA13	MESSWERTE STROM	PRUD L2 HH1	KON ZAC	22	27	0	39	75	Upper limit 1	HH1	PRUD L2	PV	R/C
71	UW KOSICE	R110	EA13	MESSWERTE STROM	PRUD L3 HH1	KON ZAC	22	27	0	39	75	Upper limit 1	HH1	PRUD L3	PV	R/C
72	UW KOSICE	R110	EA15	MESSWERTE SPANNUNG	NAPATIE L1-L2 DH1	KON ZAC	22	27	0	39	75	Lower limit 1	DH1	NAPATIE L1-L2	PV	R/C
73	UW KOSICE	R110	EA15	MESSWERTE SPANNUNG	NAPATIE L1-L2 DH2	KON ZAC	22	27	0	39	75	Lower limit 2	DH2	NAPATIE L1-L2	PV	R/C
74	UW KOSICE	R110	EA15	MESSWERTE SPANNUNG	NAPATIE L1-L2 HH1	KON ZAC	22	27	0	39	75	Upper limit 1	HH1	NAPATIE L1-L2	PV	R/C
75	UW KOSICE	R110	EA15	MESSWERTE SPANNUNG	NAPATIE L1-L3 DH1	KON ZAC	22	27	0	39	75	Lower limit 1	DH1	NAPATIE L1-L3	PV	R/C
76	UW KOSICE	R110	EA15	MESSWERTE SPANNUNG	NAPATIE L1-L3 HH1	KON ZAC	22	27	0	39	75	Upper limit 1	HH1	NAPATIE L1-L3	PV	R/C
77	UW KOSICE	R110	EA15	MESSWERTE SPANNUNG	NAPATIE L2-L3 DH1	KON ZAC	22	27	0	39	75	Lower limit 1	DH1	NAPATIE L2-L3	PV	R/C
78	UW KOSICE	R110	EA15	MESSWERTE SPANNUNG	NAPATIE L2-L3 HH1	KON ZAC	22	27	0	39	75	Upper limit 1	HH1	NAPATIE L2-L3	PV	R/C
79	UW KOSICE	R110	EA15	MESSWERTE STROM	PRUD L1 HH1	KON ZAC	22	27	0	39	75	Upper limit 1	HH1	PRUD L1	PV	R/C
80	UW KOSICE	R110	EA15	MESSWERTE STROM	PRUD L2 HH1	KON ZAC	22	27	0	39	75	Upper limit 1	HH1	PRUD L2	PV	R/C
81	UW KOSICE	R110	EA15	MESSWERTE STROM	PRUD L3 HH1	KON ZAC	22	27	0	39	75	Upper limit 1	HH1	PRUD L3	PV	R/C
82	UW KOSICE	R110	EA16	MESSWERTE SPANNUNG	NAPATIE L1-L2 DH1	KON ZAC	22	27	0	39	75	Lower limit 1	DH1	NAPATIE L1-L2	PV	R/C
83	UW KOSICE	R110	EA16	MESSWERTE SPANNUNG	NAPATIE L1-L2 DH2							Lower limit 2	DH2	NAPATIE L1-L2	PV	N
84	UW KOSICE	R110	EA16	MESSWERTE SPANNUNG	NAPATIE L1-L2 HH1	KON ZAC	22	27	0	39	75	Upper limit 1	HH1	NAPATIE L1-L2	PV	R/C
85	UW KOSICE	R110	EA16	MESSWERTE SPANNUNG	NAPATIE L1-L3 DH1	KON ZAC	22	27	0	39	75	Lower limit 1	DH1	NAPATIE L1-L3	PV	R/C
86	UW KOSICE	R110	EA16	MESSWERTE SPANNUNG	NAPATIE L1-L3 HH1	KON ZAC	22	27	0	39	75	Upper limit 1	HH1	NAPATIE L1-L3	PV	R/C
87	UW KOSICE	R110	EA16	MESSWERTE SPANNUNG	NAPATIE L2-L3 DH1	KON ZAC	22	27	0	39	75	Lower limit 1	DH1	NAPATIE L2-L3	PV	R/C
88	UW KOSICE	R110	EA16	MESSWERTE SPANNUNG	NAPATIE L2-L3 HH1	KON ZAC	22	27	0	39	75	Upper limit 1	HH1	NAPATIE L2-L3	PV	R/C
89	UW KOSICE	R110	EA17	MESSWERTE SPANNUNG	NAPATIE L1 DH1	KON ZAC	22	27	0	39	75	Lower limit 1	DH1	NAPATIE L1	PV	R/C
90	UW KOSICE	R110	EA17	MESSWERTE SPANNUNG	NAPATIE L1 DH2	KON ZAC	22	27	0	39	75	Lower limit 2	DH2	NAPATIE L1	PV	R/C
91	UW KOSICE	R110	EA17	MESSWERTE SPANNUNG	NAPATIE L1 HH1	KON ZAC	22	27	0	39	75	Upper limit 1	HH1	NAPATIE L1	PV	R/C
92	UW KOSICE	R110	EA17	MESSWERTE STROM	PRUD L1 HH1	KON ZAC	22	27	0	39	75	Upper limit 1	HH1	PRUD L1	PV	R/C
93	UW KOSICE	R110	EA17	MESSWERTE STROM	PRUD L2 HH1	KON ZAC	22	27	0	39	75	Upper limit 1	HH1	PRUD L2	PV	R/C
94	UW KOSICE	R110	EA17	MESSWERTE STROM	PRUD L3 HH1	KON ZAC	22	27	0	39	75	Upper limit 1	HH1	PRUD L3	PV	R/C
95	UW KOSICE	R110	EA18	MESSWERTE SPANNUNG	NAPATIE L1 DH1							Lower limit 1	DH1	NAPATIE L1	PV	N
96	UW KOSICE	R110	EA18	MESSWERTE SPANNUNG	NAPATIE L1 DH2	KON ZAC	22	27	0	39	75	Lower limit 2	DH2	NAPATIE L1	PV	R/C

Line number	Entry in alarm list	Acknowledge	Display in indication area	Indication class	Entry in SML	Display in diagram	Archive	Operational indications	Protection indications	Command derivation	Weiterleiten an LSANET / LSA WinCC
65	Y	R/C	Y	1	N	N	R/C	Y	N	Alarm 1 (Hupenbefehl)	N
66	Y	R/C	Y	1	N	N	R/C	Y	N	Alarm 1 (Hupenbefehl)	N
67	Y	R/C	Y	1	N	N	R/C	Y	N	Alarm 1 (Hupenbefehl)	N
68	Y	R/C	Y	1	N	N	R/C	Y	N	Alarm 1 (Hupenbefehl)	N
69	Y	R/C	Y	1	N	N	R/C	Y	N	Alarm 1 (Hupenbefehl)	N
70	Y	R/C	Y	1	N	N	R/C	Y	N	Alarm 1 (Hupenbefehl)	N
71	Y	R/C	Y	1	N	N	R/C	Y	N	Alarm 1 (Hupenbefehl)	N
72	Y	R/C	Y	1	N	N	R/C	Y	N	Alarm 1 (Hupenbefehl)	N
73	Y	R/C	Y	1	N	N	R/C	Y	N	Alarm 1 (Hupenbefehl)	N
74	Y	R/C	Y	1	N	N	R/C	Y	N	Alarm 1 (Hupenbefehl)	N
75	Y	R/C	Y	1	N	N	R/C	Y	N	Alarm 1 (Hupenbefehl)	N
76	Y	R/C	Y	1	N	N	R/C	Y	N	Alarm 1 (Hupenbefehl)	N
77	Y	R/C	Y	1	N	N	R/C	Y	N	Alarm 1 (Hupenbefehl)	N
78	Y	R/C	Y	1	N	N	R/C	Y	N	Alarm 1 (Hupenbefehl)	N
79	Y	R/C	Y	1	N	N	R/C	Y	N	Alarm 1 (Hupenbefehl)	N
80	Y	R/C	Y	1	N	N	R/C	Y	N	Alarm 1 (Hupenbefehl)	N
81	Y	R/C	Y	1	N	N	R/C	Y	N	Alarm 1 (Hupenbefehl)	N
82	Y	R/C	Y	1	N	N	R/C	Y	N	Alarm 1 (Hupenbefehl)	N
83	N				N	N	N				N
84	Y	R/C	Y	1	N	N	R/C	Y	N	Alarm 1 (Hupenbefehl)	N
85	Y	R/C	Y	1	N	N	R/C	Y	N	Alarm 1 (Hupenbefehl)	N
86	Y	R/C	Y	1	N	N	R/C	Y	N	Alarm 1 (Hupenbefehl)	N
87	Y	R/C	Y	1	N	N	R/C	Y	N	Alarm 1 (Hupenbefehl)	N
88	Y	R/C	Y	1	N	N	R/C	Y	N	Alarm 1 (Hupenbefehl)	N
89	N				N	N	R/C	Y	N		N
90	Y	R/C	Y	1	N	N	R/C	Y	N	Alarm 1 (Hupenbefehl)	N
91	Y	R/C	Y	1	N	N	R/C	Y	N	Alarm 1 (Hupenbefehl)	N
92	Y	R/C	Y	1	N	N	R/C	Y	N	Alarm 1 (Hupenbefehl)	N
93	Y	R/C	Y	1	N	N	R/C	Y	N	Alarm 1 (Hupenbefehl)	N
94	Y	R/C	Y	1	N	N	R/C	Y	N	Alarm 1 (Hupenbefehl)	N
95	N				N	N	N				N
96	Y	R/C	Y	1	N	N	R/C	Y	N	Alarm 1 (Hupenbefehl)	N

Proprietary data, company confidential. All rights reserved.
Confie a titre de secret d'entreprise. Tous droits reservs.
Comunicado como segredo empresarial. Reservados todos os direitos.
Confiado como secreto industrial. Nos reservamos todos los derechos.

The reproduction, transmission or use of this document or its is not permitted without express written authority.
Offenders will be liable for damages. All rights, including rights created by patent grant or registration of a utility model or design, are reserved.

Documentation structur: Standard
Source file: KO050722.ODA

Rev.	Remarks	Date	Name	Date	22.07.2005	VSZ KOSICE	SIEMENS AG ISA TOOLS	Substation control system 6MB Monitoring indications	T = /BM 62
				Drawn	LANG				+
				Appr.					-S111 Page 62
				Norm		Orig./Repl. 1/Repl. by		Table	

Proprietary data, company confidential. All rights reserved
Confia a título de secret d'entreprise. Tous droits reservés.
Comunicado como segredo empresarial. Reservados todos os direitos.
Confiado como secreto industrial. Nos reservamos todos los derechos
The reproduction, transmission or use of this document or its is not permitted without express written authority.
Offenders will be liable for damages. All rights, including rights created by patent grant or registration of a utility model or design, are reserved

Line number	Station	Section	Bay	Logical device	Lower limit	Value text	Column section	Column bay	Column logical device	Column information	Column value text	Monitoring function	Meldetextzusatz	Original infomation	Anzeige im Bild des 6MB524	Entry in event list
97	UW KOSICE	R110	EA18	MESSWERTE SPANNUNG	NAPATIE L1 HH1	KON ZAC	22	27	0	39	75	Upper limit 1	HH1	NAPATIE L1	PV	R/C
98	UW KOSICE	R110	EA18	MESSWERTE STROM	PRUD L1 HH1	KON ZAC	22	27	0	39	75	Upper limit 1	HH1	PRUD L1	PV	R/C
99	UW KOSICE	R110	EA18	MESSWERTE STROM	PRUD L2 HH1	KON ZAC	22	27	0	39	75	Upper limit 1	HH1	PRUD L2	PV	R/C
100	UW KOSICE	R110	EA18	MESSWERTE STROM	PRUD L3 HH1	KON ZAC	22	27	0	39	75	Upper limit 1	HH1	PRUD L3	PV	R/C
101	UW KOSICE	R110	EA19	MESSWERTE SPANNUNG	NAPATIE L1 DH1							Lower limit 1	DH1	NAPATIE L1	PV	N
102	UW KOSICE	R110	EA19	MESSWERTE SPANNUNG	NAPATIE L1 DH2	KON ZAC	22	27	0	39	75	Lower limit 2	DH2	NAPATIE L1	PV	R/C
103	UW KOSICE	R110	EA19	MESSWERTE SPANNUNG	NAPATIE L1 HH1	KON ZAC	22	27	0	39	75	Upper limit 1	HH1	NAPATIE L1	PV	R/C
104	UW KOSICE	R110	EA19	MESSWERTE STROM	PRUD L1 HH1	KON ZAC	22	27	0	39	75	Upper limit 1	HH1	PRUD L1	PV	R/C
105	UW KOSICE	R110	EA19	MESSWERTE STROM	PRUD L2 HH1	KON ZAC	22	27	0	39	75	Upper limit 1	HH1	PRUD L2	PV	R/C
106	UW KOSICE	R110	EA19	MESSWERTE STROM	PRUD L3 HH1	KON ZAC	22	27	0	39	75	Upper limit 1	HH1	PRUD L3	PV	R/C
107	UW KOSICE	R110	EA20	MESSWERTE SPANNUNG	NAPATIE L1 DH1							Lower limit 1	DH1	NAPATIE L1	PV	N
108	UW KOSICE	R110	EA20	MESSWERTE SPANNUNG	NAPATIE L1 DH2	KON ZAC	22	27	0	39	75	Lower limit 2	DH2	NAPATIE L1	PV	R/C
109	UW KOSICE	R110	EA20	MESSWERTE SPANNUNG	NAPATIE L1 HH1	KON ZAC	22	27	0	39	75	Upper limit 1	HH1	NAPATIE L1	PV	R/C
110	UW KOSICE	R110	EA20	MESSWERTE STROM	PRUD L1 HH1	KON ZAC	22	27	0	39	75	Upper limit 1	HH1	PRUD L1	PV	R/C
111	UW KOSICE	R110	EA20	MESSWERTE STROM	PRUD L2 HH1	KON ZAC	22	27	0	39	75	Upper limit 1	HH1	PRUD L2	PV	R/C
112	UW KOSICE	R110	EA20	MESSWERTE STROM	PRUD L3 HH1	KON ZAC	22	27	0	39	75	Upper limit 1	HH1	PRUD L3	PV	R/C
113	UW KOSICE	R110	EA21	MESSWERTE SPANNUNG	NAPATIE L1 DH1	KON ZAC	22	27	0	39	75	Lower limit 1	DH1	NAPATIE L1	PV	R/C
114	UW KOSICE	R110	EA21	MESSWERTE SPANNUNG	NAPATIE L1 DH2	KON ZAC	22	27	0	39	75	Lower limit 2	DH2	NAPATIE L1	PV	R/C
115	UW KOSICE	R110	EA21	MESSWERTE SPANNUNG	NAPATIE L1 HH1	KON ZAC	22	27	0	39	75	Upper limit 1	HH1	NAPATIE L1	PV	R/C
116	UW KOSICE	R110	EA21	MESSWERTE STROM	PRUD L1 HH1	KON ZAC	22	27	0	39	75	Upper limit 1	HH1	PRUD L1	PV	R/C
117	UW KOSICE	R110	EA21	MESSWERTE STROM	PRUD L2 HH1	KON ZAC	22	27	0	39	75	Upper limit 1	HH1	PRUD L2	PV	R/C
118	UW KOSICE	R110	EA21	MESSWERTE STROM	PRUD L3 HH1	KON ZAC	22	27	0	39	75	Upper limit 1	HH1	PRUD L3	PV	R/C
119	UW KOSICE	R110	EA23	MESSWERTE SPANNUNG	NAPATIE L1 DH1	KON ZAC	22	27	0	39	75	Lower limit 1	DH1	NAPATIE L1	PV	R/C
120	UW KOSICE	R110	EA23	MESSWERTE SPANNUNG	NAPATIE L1 DH2	KON ZAC	22	27	0	39	75	Lower limit 2	DH2	NAPATIE L1	PV	R/C
121	UW KOSICE	R110	EA23	MESSWERTE SPANNUNG	NAPATIE L1 HH1	KON ZAC	22	27	0	39	75	Upper limit 1	HH1	NAPATIE L1	PV	R/C
122	UW KOSICE	R110	EA23	MESSWERTE STROM	PRUD L1 HH1	KON ZAC	22	27	0	39	75	Upper limit 1	HH1	PRUD L1	PV	R/C
123	UW KOSICE	R110	EA23	MESSWERTE STROM	PRUD L2 HH1	KON ZAC	22	27	0	39	75	Upper limit 1	HH1	PRUD L2	PV	R/C
124	UW KOSICE	R110	EA23	MESSWERTE STROM	PRUD L3 HH1	KON ZAC	22	27	0	39	75	Upper limit 1	HH1	PRUD L3	PV	R/C
125	UW KOSICE	R220	T201		FREKVENCIA DH1	KON ZAC	22	27	0	39	75	Lower limit 1	DH1	FREKVENCIA	PV	R/C
126	UW KOSICE	R220	T201		FREKVENCIA HH1	KON ZAC	22	27	0	39	75	Upper limit 1	HH1	FREKVENCIA	PV	R/C
127	UW KOSICE	R220	T201		TEPLOTA TRANSF.JEDN.L1 HH1	KON ZAC	22	27	0	39	75	Upper limit 1	HH1	TEPLOTA TRANSF.JEDN.L1	PV	R/C
128	UW KOSICE	R220	T201		TEPLOTA TRANSF.JEDN.L1 HH2	KON ZAC	22	27	0	39	75	Upper limit 2	HH2	TEPLOTA TRANSF.JEDN.L1	PV	R/C

Line number	Entry in alarm list	Acknowledge	Display in indication area	Indication class	Entry in SML	Display in diagram	Archive	Operational indications	Protection indications	Command derivation	Weiterleiten an LSANET / LSA WinCC
97	Y	R/C	Y	1	N	N	R/C	Y	N	Alarm 1 (Hupenbefehl)	N
98	Y	R/C	Y	1	N	N	R/C	Y	N	Alarm 1 (Hupenbefehl)	N
99	Y	R/C	Y	1	N	N	R/C	Y	N	Alarm 1 (Hupenbefehl)	N
100	Y	R/C	Y	1	N	N	R/C	Y	N	Alarm 1 (Hupenbefehl)	N
101	N				N	N	N				N
102	Y	R/C	Y	1	N	N	R/C	Y	N	Alarm 1 (Hupenbefehl)	N
103	Y	R/C	Y	1	N	N	R/C	Y	N	Alarm 1 (Hupenbefehl)	N
104	Y	R/C	Y	1	N	N	R/C	Y	N	Alarm 1 (Hupenbefehl)	N
105	Y	R/C	Y	1	N	N	R/C	Y	N	Alarm 1 (Hupenbefehl)	N
106	Y	R/C	Y	1	N	N	R/C	Y	N	Alarm 1 (Hupenbefehl)	N
107	N				N	N	N				N
108	Y	R/C	Y	1	N	N	R/C	Y	N	Alarm 1 (Hupenbefehl)	N
109	Y	R/C	Y	1	N	N	R/C	Y	N	Alarm 1 (Hupenbefehl)	N
110	Y	R/C	Y	1	N	N	R/C	Y	N	Alarm 1 (Hupenbefehl)	N
111	Y	R/C	Y	1	N	N	R/C	Y	N	Alarm 1 (Hupenbefehl)	N
112	Y	R/C	Y	1	N	N	R/C	Y	N	Alarm 1 (Hupenbefehl)	N
113	N				N	N	R/C	Y	N		N
114	Y	R/C	Y	1	N	N	R/C	Y	N	Alarm 1 (Hupenbefehl)	N
115	Y	R/C	Y	1	N	N	R/C	Y	N	Alarm 1 (Hupenbefehl)	N
116	Y	R/C	Y	1	N	N	R/C	Y	N	Alarm 1 (Hupenbefehl)	N
117	Y	R/C	Y	1	N	N	R/C	Y	N	Alarm 1 (Hupenbefehl)	N
118	Y	R/C	Y	1	N	N	R/C	Y	N	Alarm 1 (Hupenbefehl)	N
119	N				N	N	R/C	Y	N		N
120	Y	R/C	Y	1	N	N	R/C	Y	N	Alarm 1 (Hupenbefehl)	N
121	Y	R/C	Y	1	N	N	R/C	Y	N	Alarm 1 (Hupenbefehl)	N
122	Y	R/C	Y	1	N	N	R/C	Y	N	Alarm 1 (Hupenbefehl)	N
123	Y	R/C	Y	1	N	N	R/C	Y	N	Alarm 1 (Hupenbefehl)	N
124	Y	R/C	Y	1	N	N	R/C	Y	N	Alarm 1 (Hupenbefehl)	N
125	Y	R/C	Y	1	N	N	R/C	Y	N	Alarm 1 (Hupenbefehl)	N
126	Y	R/C	Y	1	N	N	R/C	Y	N	Alarm 1 (Hupenbefehl)	N
127	Y	R/C	Y	1	N	N	R/C	Y	N	Alarm 1 (Hupenbefehl)	N
128	Y	R/C	Y	1	N	N	R/C	Y	N	Alarm 1 (Hupenbefehl)	N

Proprietary data, company confidential. All rights reserved.
Confie a titre de secret d'entreprise. Tous droits réservés.
Comunicado como segredo empresarial. Reservados todos os direitos.
Confiado como secreto industrial. Nos reservamos todos los derechos.

The reproduction, transmission or use of this document or its is not permitted without express written authority.
Offenders will be liable for damages. All rights, including rights created by patent grant or registration of a utility model or design, are reserved.

Documentation structur: Standard
Source file: KO050722.ODA

Rev.	Remarks	Date	Name	Date	22.07.2005	VSZ KOSICE	SIEMENS AG ISAOOLS	Substation control system 6MB Monitoring indications	T = /BM 64
				Drawn	LANG				+
				Appr.					-S111
				Norm		Orig./Repl. 1/Repl. by		Table	Page 64

Proprietary data, company confidential. All rights reserved
Confiaa tire da secret dentreprise. Tous droits r servs.
Comunicado como segredo empresarial. Reservados todos os direitos
Confiado como secreto industrial. Nos reservamos todos los derechos
The reproduction, transmission or use of this document or its
is not permited without expres written authority.
Offenders will be liable for damages. All rights, including rights
created by patent grant or registration of a utility model or design, are reserved

Line number	Station	Section	Bay	Logical device	Lower limit	Value text	Column section	Column bay	Column logical device	Column information	Column value text	Monitoring function	Meldetextzusatz	Original infomation	Anzeige im Bild des 6MB524	Entry in event list
129	UW KOSICE	R220	T201		TEPLOTA TRANSF.JEDN.L2 HH1	KON ZAC	22	27	0	39	75	Upper limit 1	HH1	TEPLOTA TRANSF.JEDN.L2	PV	R/C
130	UW KOSICE	R220	T201		TEPLOTA TRANSF.JEDN.L2 HH2	KON ZAC	22	27	0	39	75	Upper limit 2	HH2	TEPLOTA TRANSF.JEDN.L2	PV	R/C
131	UW KOSICE	R220	T201		TEPLOTA TRANSF.JEDN.L3 HH1	KON ZAC	22	27	0	39	75	Upper limit 1	HH1	TEPLOTA TRANSF.JEDN.L3	PV	R/C
132	UW KOSICE	R220	T201		TEPLOTA TRANSF.JEDN.L3 HH2	KON ZAC	22	27	0	39	75	Upper limit 2	HH2	TEPLOTA TRANSF.JEDN.L3	PV	R/C
133	UW KOSICE	R220	T201	MESSW. SPANNUNG	NAPATIE L1-L2 DH1	KON ZAC	22	27	0	39	75	Lower limit 1	DH1	NAPATIE L1-L2	PV	R/C
134	UW KOSICE	R220	T201	MESSW. SPANNUNG	NAPATIE L1-L2 DH2	KON ZAC	22	27	0	39	75	Lower limit 2	DH2	NAPATIE L1-L2	PV	R/C
135	UW KOSICE	R220	T201	MESSW. SPANNUNG	NAPATIE L1-L2 HH1	KON ZAC	22	27	0	39	75	Upper limit 1	HH1	NAPATIE L1-L2	PV	R/C
136	UW KOSICE	R220	T201	MESSW. SPANNUNG	NAPATIE L1-L3 DH1	KON ZAC	22	27	0	39	75	Lower limit 1	DH1	NAPATIE L1-L3	PV	R/C
137	UW KOSICE	R220	T201	MESSW. SPANNUNG	NAPATIE L1-L3 DH2	KON ZAC	22	27	0	39	75	Lower limit 2	DH2	NAPATIE L1-L3	PV	R/C
138	UW KOSICE	R220	T201	MESSW. SPANNUNG	NAPATIE L1-L3 HH1	KON ZAC	22	27	0	39	75	Upper limit 1	HH1	NAPATIE L1-L3	PV	R/C
139	UW KOSICE	R220	T201	MESSW. SPANNUNG	NAPATIE L2-L3 DH1	KON ZAC	22	27	0	39	75	Lower limit 1	DH1	NAPATIE L2-L3	PV	R/C
140	UW KOSICE	R220	T201	MESSW. SPANNUNG	NAPATIE L2-L3 DH2	KON ZAC	22	27	0	39	75	Lower limit 2	DH2	NAPATIE L2-L3	PV	R/C
141	UW KOSICE	R220	T201	MESSW. SPANNUNG	NAPATIE L2-L3 HH1	KON ZAC	22	27	0	39	75	Upper limit 1	HH1	NAPATIE L2-L3	PV	R/C
142	UW KOSICE	R220	T201	MESSW. SPANNUNG DA01	NAPATIE L1-L2 DH1	KON ZAC	22	27	0	39	75	Lower limit 1	DH1	NAPATIE L1-L2	PV	R/C
143	UW KOSICE	R220	T201	MESSW. SPANNUNG DA01	NAPATIE L1-L2 DH2	KON ZAC	22	27	0	39	75	Lower limit 2	DH2	NAPATIE L1-L2	PV	R/C
144	UW KOSICE	R220	T201	MESSW. SPANNUNG DA01	NAPATIE L1-L2 HH1	KON ZAC	22	27	0	39	75	Upper limit 1	HH1	NAPATIE L1-L2	PV	R/C
145	UW KOSICE	R220	T201	MESSW. SPANNUNG DA01	NAPATIE L1-L3 DH1	KON ZAC	22	27	0	39	75	Lower limit 1	DH1	NAPATIE L1-L3	PV	R/C
146	UW KOSICE	R220	T201	MESSW. SPANNUNG DA01	NAPATIE L1-L3 DH2	KON ZAC	22	27	0	39	75	Lower limit 2	DH2	NAPATIE L1-L3	PV	R/C
147	UW KOSICE	R220	T201	MESSW. SPANNUNG DA01	NAPATIE L1-L3 HH1	KON ZAC	22	27	0	39	75	Upper limit 1	HH1	NAPATIE L1-L3	PV	R/C
148	UW KOSICE	R220	T201	MESSW. SPANNUNG DA01	NAPATIE L2-L3 DH1	KON ZAC	22	27	0	39	75	Lower limit 1	DH1	NAPATIE L2-L3	PV	R/C
149	UW KOSICE	R220	T201	MESSW. SPANNUNG DA01	NAPATIE L2-L3 DH2	KON ZAC	22	27	0	39	75	Lower limit 2	DH2	NAPATIE L2-L3	PV	R/C
150	UW KOSICE	R220	T201	MESSW. SPANNUNG DA01	NAPATIE L2-L3 HH1	KON ZAC	22	27	0	39	75	Upper limit 1	HH1	NAPATIE L2-L3	PV	R/C
151	UW KOSICE	R220	T201	MESSWERTE STROM	PRUD L1 HH1	KON ZAC	22	27	0	39	75	Upper limit 1	HH1	PRUD L1	PV	R/C
152	UW KOSICE	R220	T201	MESSWERTE STROM	PRUD L2 HH1	KON ZAC	22	27	0	39	75	Upper limit 1	HH1	PRUD L2	PV	R/C
153	UW KOSICE	R220	T201	MESSWERTE STROM	PRUD L3 HH1	KON ZAC	22	27	0	39	75	Upper limit 1	HH1	PRUD L3	PV	R/C
154	UW KOSICE	R220	T202		FREKVENCIA DH1	KON ZAC	22	27	0	39	75	Lower limit 1	DH1	FREKVENCIA	PV	R/C
155	UW KOSICE	R220	T202		FREKVENCIA HH1	KON ZAC	22	27	0	39	75	Upper limit 1	HH1	FREKVENCIA	PV	R/C
156	UW KOSICE	R220	T202	MESSW. SPANNUNG	NAPATIE L1-L2 DH1	KON ZAC	22	27	0	39	75	Lower limit 1	DH1	NAPATIE L1-L2	PV	R/C
157	UW KOSICE	R220	T202	MESSW. SPANNUNG	NAPATIE L1-L2 DH2	KON ZAC	22	27	0	39	75	Lower limit 2	DH2	NAPATIE L1-L2	PV	R/C
158	UW KOSICE	R220	T202	MESSW. SPANNUNG	NAPATIE L1-L2 HH1	KON ZAC	22	27	0	39	75	Upper limit 1	HH1	NAPATIE L1-L2	PV	R/C
159	UW KOSICE	R220	T202	MESSW. SPANNUNG	NAPATIE L1-L3 DH1	KON ZAC	22	27	0	39	75	Lower limit 1	DH1	NAPATIE L1-L3	PV	R/C
160	UW KOSICE	R220	T202	MESSW. SPANNUNG	NAPATIE L1-L3 DH2	KON ZAC	22	27	0	39	75	Lower limit 2	DH2	NAPATIE L1-L3	PV	R/C

Proprietary data, company confidential. All rights reserved
Confia a tire da secret de-tenprise. Tous droits reserva
Comunicado como segredo empresarial. Reservados todos os direitos.
Confiado como secreto industrial. Nos reservamos todos los derechos.

The reproduction, transmission or use of this document or its
is not permitted without expres written authority.
Offenders will be liable for damages. All rights, including rights
created by patent grant or registration of a utility model or design, are reserved

Documentation structur: Standard
Source file: K050722.ODA

Line number	Entry in alarm list	Acknowledge	Display in indication area	Indication class	Entry in SML	Display in diagram	Archive	Operational indications	Protection indications	Command derivation	Weiterleiten an LSANET / LSA WinCC
129	Y	R/C	Y	1	N	N	R/C	Y	N	Alarm 1 (Hupenbefehl)	N
130	Y	R/C	Y	1	N	N	R/C	Y	N	Alarm 1 (Hupenbefehl)	N
131	Y	R/C	Y	1	N	N	R/C	Y	N	Alarm 1 (Hupenbefehl)	N
132	Y	R/C	Y	1	N	N	R/C	Y	N	Alarm 1 (Hupenbefehl)	N
133	Y	R/C	Y	1	N	N	R/C	Y	N	Alarm 1 (Hupenbefehl)	N
134	Y	R/C	Y	1	N	N	R/C	Y	N	Alarm 1 (Hupenbefehl)	N
135	Y	R/C	Y	1	N	N	R/C	Y	N	Alarm 1 (Hupenbefehl)	N
136	Y	R/C	Y	1	N	N	R/C	Y	N	Alarm 1 (Hupenbefehl)	N
137	Y	R/C	Y	1	N	N	R/C	Y	N	Alarm 1 (Hupenbefehl)	N
138	Y	R/C	Y	1	N	N	R/C	Y	N	Alarm 1 (Hupenbefehl)	N
139	Y	R/C	Y	1	N	N	R/C	Y	N	Alarm 1 (Hupenbefehl)	N
140	Y	R/C	Y	1	N	N	R/C	Y	N	Alarm 1 (Hupenbefehl)	N
141	Y	R/C	Y	1	N	N	R/C	Y	N	Alarm 1 (Hupenbefehl)	N
142	Y	R/C	Y	1	N	N	R/C	Y	N	Alarm 1 (Hupenbefehl)	N
143	Y	R/C	Y	1	N	N	R/C	Y	N	Alarm 1 (Hupenbefehl)	N
144	Y	R/C	Y	1	N	N	R/C	Y	N	Alarm 1 (Hupenbefehl)	N
145	Y	R/C	Y	1	N	N	R/C	Y	N	Alarm 1 (Hupenbefehl)	N
146	Y	R/C	Y	1	N	N	R/C	Y	N	Alarm 1 (Hupenbefehl)	N
147	Y	R/C	Y	1	N	N	R/C	Y	N	Alarm 1 (Hupenbefehl)	N
148	Y	R/C	Y	1	N	N	R/C	Y	N	Alarm 1 (Hupenbefehl)	N
149	Y	R/C	Y	1	N	N	R/C	Y	N	Alarm 1 (Hupenbefehl)	N
150	Y	R/C	Y	1	N	N	R/C	Y	N	Alarm 1 (Hupenbefehl)	N
151	Y	R/C	Y	1	N	N	R/C	Y	N	Alarm 1 (Hupenbefehl)	N
152	Y	R/C	Y	1	N	N	R/C	Y	N	Alarm 1 (Hupenbefehl)	N
153	Y	R/C	Y	1	N	N	R/C	Y	N	Alarm 1 (Hupenbefehl)	N
154	Y	R/C	Y	1	N	N	R/C	Y	N	Alarm 1 (Hupenbefehl)	N
155	Y	R/C	Y	1	N	N	R/C	Y	N	Alarm 1 (Hupenbefehl)	N
156	Y	R/C	Y	1	N	N	R/C	Y	N	Alarm 1 (Hupenbefehl)	N
157	Y	R/C	Y	1	N	N	R/C	Y	N	Alarm 1 (Hupenbefehl)	N
158	Y	R/C	Y	1	N	N	R/C	Y	N	Alarm 1 (Hupenbefehl)	N
159	Y	R/C	Y	1	N	N	R/C	Y	N	Alarm 1 (Hupenbefehl)	N
160	Y	R/C	Y	1	N	N	R/C	Y	N	Alarm 1 (Hupenbefehl)	N

Proprietary data, company confidential. All rights reserved.
Confiée à titre de secret d'entreprise. Tous droits réservés.
Comunicado como segredo empresarial. Reservados todos os direitos.
Confiado como secreto industrial. Nos reservamos todos los derechos.
The reproduction, transmission or use of this document or its contents is not permitted without express written authority. Offenders will be liable for damages. All rights, including rights created by patent grant or registration of a utility model or design, are reserved.

Documentation structur: Standard
Source file: KO050722.ODA

Line number	Station	Section	Bay	Logical device	Lower limit	Value text	Column section	Column bay	Column logical device	Column information	Column value text	Monitoring function	Meldetextzusatz	Original infomation	Anzeige im Bild des 6MB524	Entry in event list
161	UW KOSICE	R220	T202	MESSW. SPANNUNG	NAPATIE L1-L3 HH1	KON ZAC	22	27	0	39	75	Upper limit 1	HH1	NAPATIE L1-L3	PV	R/C
162	UW KOSICE	R220	T202	MESSW. SPANNUNG	NAPATIE L2-L3 DH1	KON ZAC	22	27	0	39	75	Lower limit 1	DH1	NAPATIE L2-L3	PV	R/C
163	UW KOSICE	R220	T202	MESSW. SPANNUNG	NAPATIE L2-L3 DH2	KON ZAC	22	27	0	39	75	Lower limit 2	DH2	NAPATIE L2-L3	PV	R/C
164	UW KOSICE	R220	T202	MESSW. SPANNUNG	NAPATIE L2-L3 HH1	KON ZAC	22	27	0	39	75	Upper limit 1	HH1	NAPATIE L2-L3	PV	R/C
165	UW KOSICE	R220	T202	MESSW. SPANNUNG DA02	NAPATIE L1-L2 DH1	KON ZAC	22	27	0	39	75	Lower limit 1	DH1	NAPATIE L1-L2	PV	R/C
166	UW KOSICE	R220	T202	MESSW. SPANNUNG DA02	NAPATIE L1-L2 DH2	KON ZAC	22	27	0	39	75	Lower limit 2	DH2	NAPATIE L1-L2	PV	R/C
167	UW KOSICE	R220	T202	MESSW. SPANNUNG DA02	NAPATIE L1-L2 HH1	KON ZAC	22	27	0	39	75	Upper limit 1	HH1	NAPATIE L1-L2	PV	R/C
168	UW KOSICE	R220	T202	MESSW. SPANNUNG DA02	NAPATIE L1-L3 DH1	KON ZAC	22	27	0	39	75	Lower limit 1	DH1	NAPATIE L1-L3	PV	R/C
169	UW KOSICE	R220	T202	MESSW. SPANNUNG DA02	NAPATIE L1-L3 DH2	KON ZAC	22	27	0	39	75	Lower limit 2	DH2	NAPATIE L1-L3	PV	R/C
170	UW KOSICE	R220	T202	MESSW. SPANNUNG DA02	NAPATIE L1-L3 HH1	KON ZAC	22	27	0	39	75	Upper limit 1	HH1	NAPATIE L1-L3	PV	R/C
171	UW KOSICE	R220	T202	MESSW. SPANNUNG DA02	NAPATIE L2-L3 DH1	KON ZAC	22	27	0	39	75	Lower limit 1	DH1	NAPATIE L2-L3	PV	R/C
172	UW KOSICE	R220	T202	MESSW. SPANNUNG DA02	NAPATIE L2-L3 DH2	KON ZAC	22	27	0	39	75	Lower limit 2	DH2	NAPATIE L2-L3	PV	R/C
173	UW KOSICE	R220	T202	MESSW. SPANNUNG DA02	NAPATIE L2-L3 HH1	KON ZAC	22	27	0	39	75	Upper limit 1	HH1	NAPATIE L2-L3	PV	R/C
174	UW KOSICE	R220	T202	MESSWERTE STROM	PRUD L1 HH1	KON ZAC	22	27	0	39	75	Upper limit 1	HH1	PRUD L1	PV	R/C
175	UW KOSICE	R220	T202	MESSWERTE STROM	PRUD L2 HH1	KON ZAC	22	27	0	39	75	Upper limit 1	HH1	PRUD L2	PV	R/C
176	UW KOSICE	R220	T202	MESSWERTE STROM	PRUD L3 HH1	KON ZAC	22	27	0	39	75	Upper limit 1	HH1	PRUD L3	PV	R/C
177	UW KOSICE	R220	T202.		TEPLOTA TRANSF.JEDN. Q HH1	KON ZAC	22	27	0	39	75	Upper limit 1	HH1	TEPLOTA TRANSF.JEDN. Q	PV	R/C
178	UW KOSICE	R220	T202.		TEPLOTA TRANSF.JEDN. Q HH2	KON ZAC	22	27	0	39	75	Upper limit 2	HH2	TEPLOTA TRANSF.JEDN. Q	PV	R/C
179	UW KOSICE	R220	T202.		TEPLOTA TRANSF.JEDN.L1 HH1	KON ZAC	22	27	0	39	75	Upper limit 1	HH1	TEPLOTA TRANSF.JEDN.L1	PV	R/C
180	UW KOSICE	R220	T202.		TEPLOTA TRANSF.JEDN.L1 HH2	KON ZAC	22	27	0	39	75	Upper limit 2	HH2	TEPLOTA TRANSF.JEDN.L1	PV	R/C
181	UW KOSICE	R220	T202.		TEPLOTA TRANSF.JEDN.L2 HH1	KON ZAC	22	27	0	39	75	Upper limit 1	HH1	TEPLOTA TRANSF.JEDN.L2	PV	R/C
182	UW KOSICE	R220	T202.		TEPLOTA TRANSF.JEDN.L2 HH2	KON ZAC	22	27	0	39	75	Upper limit 2	HH2	TEPLOTA TRANSF.JEDN.L2	PV	R/C
183	UW KOSICE	R220	T202.		TEPLOTA TRANSF.JEDN.L3 HH1	KON ZAC	22	27	0	39	75	Upper limit 1	HH1	TEPLOTA TRANSF.JEDN.L3	PV	R/C
184	UW KOSICE	R220	T202.		TEPLOTA TRANSF.JEDN.L3 HH2	KON ZAC	22	27	0	39	75	Upper limit 2	HH2	TEPLOTA TRANSF.JEDN.L3	PV	R/C
185	UW KOSICE	T201	TERC	MESSWERTE SPANNUNG	NAPATIE L1-L2 DH1	KON ZAC	22	27	0	39	75	Lower limit 1	DH1	NAPATIE L1-L2	PV	R/C
186	UW KOSICE	T201	TERC	MESSWERTE SPANNUNG	NAPATIE L1-L2 HH1	KON ZAC	22	27	0	39	75	Upper limit 1	HH1	NAPATIE L1-L2	PV	R/C
187	UW KOSICE	T201	TERC	MESSWERTE SPANNUNG	NAPATIE L1-L3 DH1	KON ZAC	22	27	0	39	75	Lower limit 1	DH1	NAPATIE L1-L3	PV	R/C
188	UW KOSICE	T201	TERC	MESSWERTE SPANNUNG	NAPATIE L1-L3 HH1	KON ZAC	22	27	0	39	75	Upper limit 1	HH1	NAPATIE L1-L3	PV	R/C
189	UW KOSICE	T201	TERC	MESSWERTE SPANNUNG	NAPATIE L2-L3 DH1	KON ZAC	22	27	0	39	75	Lower limit 1	DH1	NAPATIE L2-L3	PV	R/C
190	UW KOSICE	T201	TERC	MESSWERTE SPANNUNG	NAPATIE L2-L3 HH1	KON ZAC	22	27	0	39	75	Upper limit 1	HH1	NAPATIE L2-L3	PV	R/C
191	UW KOSICE	T201	TERC	MESSWERTE STROM	PRUD L1 HH1	KON ZAC	22	27	0	39	75	Upper limit 1	HH1	PRUD L1	PV	R/C
192	UW KOSICE	T201	TERC	MESSWERTE STROM	PRUD L2 HH1	KON ZAC	22	27	0	39	75	Upper limit 1	HH1	PRUD L2	PV	R/C

Date	22.07.2005	VSZ KOSICE	SIEMENS AG ISATOOLS
Drawn	LANG		
Appr.			
Norm		Orig./Repl. 1/Repl. by	

Substation control system 6MB
Monitoring indications
Table

T = /BM 67
+
-S111
Page 7

Remarks | Date | Name

Line number	Entry in alarm list	Acknowledge	Display in indication area	Indication class	Entry in SML	Display in diagram	Archive	Operational indications	Protection indications	Command derivation	Weiterleiten an LSANET / LSA WinCC
161	Y	R/C	Y	1	N	N	R/C	Y	N	Alarm 1 (Hupenbefehl)	N
162	Y	R/C	Y	1	N	N	R/C	Y	N	Alarm 1 (Hupenbefehl)	N
163	Y	R/C	Y	1	N	N	R/C	Y	N	Alarm 1 (Hupenbefehl)	N
164	Y	R/C	Y	1	N	N	R/C	Y	N	Alarm 1 (Hupenbefehl)	N
165	Y	R/C	Y	1	N	N	R/C	Y	N	Alarm 1 (Hupenbefehl)	N
166	Y	R/C	Y	1	N	N	R/C	Y	N	Alarm 1 (Hupenbefehl)	N
167	Y	R/C	Y	1	N	N	R/C	Y	N	Alarm 1 (Hupenbefehl)	N
168	Y	R/C	Y	1	N	N	R/C	Y	N	Alarm 1 (Hupenbefehl)	N
169	Y	R/C	Y	1	N	N	R/C	Y	N	Alarm 1 (Hupenbefehl)	N
170	Y	R/C	Y	1	N	N	R/C	Y	N	Alarm 1 (Hupenbefehl)	N
171	Y	R/C	Y	1	N	N	R/C	Y	N	Alarm 1 (Hupenbefehl)	N
172	Y	R/C	Y	1	N	N	R/C	Y	N	Alarm 1 (Hupenbefehl)	N
173	Y	R/C	Y	1	N	N	R/C	Y	N	Alarm 1 (Hupenbefehl)	N
174	Y	R/C	Y	1	N	N	R/C	Y	N	Alarm 1 (Hupenbefehl)	N
175	Y	R/C	Y	1	N	N	R/C	Y	N	Alarm 1 (Hupenbefehl)	N
176	Y	R/C	Y	1	N	N	R/C	Y	N	Alarm 1 (Hupenbefehl)	N
177	Y	R/C	Y	1	N	N	R/C	Y	N	Alarm 1 (Hupenbefehl)	N
178	Y	R/C	Y	1	N	N	R/C	Y	N	Alarm 1 (Hupenbefehl)	N
179	Y	R/C	Y	1	N	N	R/C	Y	N	Alarm 1 (Hupenbefehl)	N
180	Y	R/C	Y	1	N	N	R/C	Y	N	Alarm 1 (Hupenbefehl)	N
181	Y	R/C	Y	1	N	N	R/C	Y	N	Alarm 1 (Hupenbefehl)	N
182	Y	R/C	Y	1	N	N	R/C	Y	N	Alarm 1 (Hupenbefehl)	N
183	Y	R/C	Y	1	N	N	R/C	Y	N	Alarm 1 (Hupenbefehl)	N
184	Y	R/C	Y	1	N	N	R/C	Y	N	Alarm 1 (Hupenbefehl)	N
185	Y	R/C	Y	1	N	N	R/C	Y	N	Alarm 1 (Hupenbefehl)	N
186	Y	R/C	Y	1	N	N	R/C	Y	N	Alarm 1 (Hupenbefehl)	N
187	Y	R/C	Y	1	N	N	R/C	Y	N	Alarm 1 (Hupenbefehl)	N
188	Y	R/C	Y	1	N	N	R/C	Y	N	Alarm 1 (Hupenbefehl)	N
189	Y	R/C	Y	1	N	N	R/C	Y	N	Alarm 1 (Hupenbefehl)	N
190	Y	R/C	Y	1	N	N	R/C	Y	N	Alarm 1 (Hupenbefehl)	N
191	Y	R/C	Y	1	N	N	R/C	Y	N	Alarm 1 (Hupenbefehl)	N
192	Y	R/C	Y	1	N	N	R/C	Y	N	Alarm 1 (Hupenbefehl)	N

Proprietary data, company confidential. All rights reserved.
Confie a titre de secret d'entreprise. Tous droits réservés.
Comunicado como segredo empresarial. Reservados todos os direitos.
Confiado como secreto industrial. Nos reservamos todos los derechos.

The reproduction, transmission or use of this document or its contents is not permitted without express written authority. Offenders will be liable for damages. All rights, including rights created by patent grant or registration of a utility model or design, are reserved.

Documentation structur: Standard
Source file: KO050722.ODA

Rev.	Remarks	Date	Name	Date	22.07.2005	VSZ KOSICE	SIEMENS AG ISAOOLS	Substation control system 6MB Monitoring indications	T = /BM 68
				Drawn	LANG				+
				Appr.					-S111 Page 68
				Norm		Orig./Repl. 1/Repl. by		Table	

Line number	Station	Section	Bay	Logical device	Lower limit	Value text	Column section	Column bay	Column logical device	Column information	Column value text	Monitoring function	Meldetextzusatz	Original infomation	Anzeige im Bild des 6MB524	Entry in event list
193	UW KOSICE	T201	TERC	MESSWERTE STROM	PRUD L3 HH1	KON ZAC	22	27	0	39	75	Upper limit 1	HH1	PRUD L3	PV	R/C
194	UW KOSICE	T202	TERC	MESSWERTE SPANNUNG	NAPATIE L1-L2 DH1	KON ZAC	22	27	0	39	75	Lower limit 1	DH1	NAPATIE L1-L2	PV	R/C
195	UW KOSICE	T202	TERC	MESSWERTE SPANNUNG	NAPATIE L1-L2 HH1	KON ZAC	22	27	0	39	75	Upper limit 1	HH1	NAPATIE L1-L2	PV	R/C
196	UW KOSICE	T202	TERC	MESSWERTE SPANNUNG	NAPATIE L1-L3 DH1	KON ZAC	22	27	0	39	75	Lower limit 1	DH1	NAPATIE L1-L3	PV	R/C
197	UW KOSICE	T202	TERC	MESSWERTE SPANNUNG	NAPATIE L1-L3 HH1	KON ZAC	22	27	0	39	75	Upper limit 1	HH1	NAPATIE L1-L3	PV	R/C
198	UW KOSICE	T202	TERC	MESSWERTE SPANNUNG	NAPATIE L2-L3 DH1	KON ZAC	22	27	0	39	75	Lower limit 1	DH1	NAPATIE L2-L3	PV	R/C
199	UW KOSICE	T202	TERC	MESSWERTE SPANNUNG	NAPATIE L2-L3 HH1	KON ZAC	22	27	0	39	75	Upper limit 1	HH1	NAPATIE L2-L3	PV	R/C
200	UW KOSICE	T202	TERC	MESSWERTE STROM	PRUD L1 HH1	KON ZAC	22	27	0	39	75	Upper limit 1	HH1	PRUD L1	PV	R/C
201	UW KOSICE	T202	TERC	MESSWERTE STROM	PRUD L2 HH1	KON ZAC	22	27	0	39	75	Upper limit 1	HH1	PRUD L2	PV	R/C
202	UW KOSICE	T202	TERC	MESSWERTE STROM	PRUD L3 HH1	KON ZAC	22	27	0	39	75	Upper limit 1	HH1	PRUD L3	PV	R/C

Proprietary data, company confidential. All rights reserved.
Confie a titre de secret d'entreprise. Tous droits reservés.
Comunicado como segredo empresarial. Reservados todos os direitos.
Confiado como secreto industrial. Nos reservamos todos los derechos.

The reproduction, transmission or use of this document or its
is not permitted without express written authority.
Offenders will be liable for damages. All rights, including rights
created by patent grant or registration of a utility model or design, are reserved.

Documentation structur: Standard
Source file: KO050722.ODA

R	Remarks	Date	Name	Date	22.07.2005	VSZ KOSICE	SIEMENS AG ISAIOOLS	Substation control system 6MB Monitoring indications	T = /BM 69
				Drawn	LANG				+
				Appr.					
				Norm		Orig./Repl. 1/Repl. by		Table	-S111 Page

Proprietary data, company confidential. All rights reserved.
Contents may be copied or forwarded only with our express consent. Our rights arising from
Comunicado como segredo empresarial. Reservamos todos os direitos.
Cortado como secreto industrial. Nos reservamos todos los derechos.

The reproduction, transmission or use of this document or its
contents is not permitted without express authority.
Offenders will be liable for damages. All rights, including rights
created by patent grant or registration of a utility model or design, are reserved.

Documentation structur: Standard
Source file: KO050722.ODA

Line number	Entry in alarm list	Acknowledge	Display in indication area	Indication class	Entry in SML	Display in diagram	Archive	Operational indications	Protection indications	Command derivation	Weiterleiten an LSANET / LSA WinCC
193	Y	R/C	Y	1	N	N	R/C	Y	N	Alarm 1 (Hupenbefehl)	N
194	Y	R/C	Y	1	N	N	R/C	Y	N	Alarm 1 (Hupenbefehl)	N
195	Y	R/C	Y	1	N	N	R/C	Y	N	Alarm 1 (Hupenbefehl)	N
196	Y	R/C	Y	1	N	N	R/C	Y	N	Alarm 1 (Hupenbefehl)	N
197	Y	R/C	Y	1	N	N	R/C	Y	N	Alarm 1 (Hupenbefehl)	N
198	Y	R/C	Y	1	N	N	R/C	Y	N	Alarm 1 (Hupenbefehl)	N
199	Y	R/C	Y	1	N	N	R/C	Y	N	Alarm 1 (Hupenbefehl)	N
200	Y	R/C	Y	1	N	N	R/C	Y	N	Alarm 1 (Hupenbefehl)	N
201	Y	R/C	Y	1	N	N	R/C	Y	N	Alarm 1 (Hupenbefehl)	N
202	Y	R/C	Y	1	N	N	R/C	Y	N	Alarm 1 (Hupenbefehl)	N

Rev.	Remarks	Date	Name	Norm	Date	22.07.2005
					Drawn	LANG
					Appr.	

Orig./Repl. 1/Repl. by: VSZ KOSICE

SIEMENS AG
ISAGOOLS

Substation control system 6MB
Monitoring indications

Table

T = /BM 70
+
-S111
Page 70

Name of function: Alarm 1 (Hupenbefehl)

Cancel after first fulfilled rule: Yes
Application as: Higher-level
With information status processing: No

```
Function for command derivation <Alarm 1 (Hupenbefehl)>
 ├─ IF <ALARM1 W1>
 │   └─ AND <ALARM1 W1 U1>
 │       ├─ Automatic acknowledgment active = NEIN
 │       ├─ State of the calling indication = ZAC
 │       ├─ Read state from (GERAETE-STATUSMELDUNGEN, BF01, NEPRIPRAVENY) = KON
 │       ├─ Triggering directly with (GERAETE-STATUSMELDUNGEN, LZG, MK HUPE) = NEIN
 │       └─ OR <ALARM 1 W1 U1 O1>
 │           ├─ Cause of calling indication = GST
 │           └─ Cause of calling indication = SPN
 ├─ THEN <ALARM 1 D1 KOM>
 │   ├─ Set PI table input for (GERAETE-STATUSMELDUNGEN, LZG, SPO ZAPNUTIE HUKACKY) = ZAC
 │   └─ Command without checkback from (GERAETE-STATUSMELDUNGEN, LZG, SPO ZAPNUTIE HUKACKY) = ZAC
 ├─ ELSE_IF <    >
 │   └─ AND <    >
 │       ├─ Triggering directly with (GERAETE-STATUSMELDUNGEN, LZG, MK HUPE) = JA
 │       └─ Read state from (GERAETE-STATUSMELDUNGEN, BF01, NEPRIPRAVENY) = KON
 └─ THEN <    >
     └─ Command without checkback from (GERAETE-STATUSMELDUNGEN, LZG, SPO VYPNUTIE HUKACKY) = ZAC
```

Proprietary data, company confidential. All rights reserved.
Confia a tire da secret d'entreprise. Tous droits réservés.
Comunicado como segredo empresarial. Reservados todos os direitos.
Confiado como secreto industrial. Nos reservamos todos los derechos.
The reproduction, transmission or use of this document or its
is not permitted without express written authority.
Offenders will be liable for damages. All rights, including rights
created by patent grant or registration of a utility model or design, are reserved.

Documentation structur: Standard
Source file: KO050722.ODA

			Date	22.07.2005	VSZ KOSICE	SIEMENS AG ISATOOLS	Substation control system 6MB
			Drawn	LANG			Function for command derivation
			Appr.				
P	Remarks	Date	Name	Norm	Orig./Repl. 1/Repl. by		Table

T = /BP 1
+
-S113
Page 1

Name of function: Ereignisgesteuerte Messwertarchivierung

Cancel after first fulfilled rule: Yes
Application as: Bay-related
With information status processing: No

```
Function for command derivation <Ereignisgesteuerte Messwertarchivierung>
├─ IF <    >
│   └─ State of the calling indication = ZAC
├─ THEN <    >
│   └─ Archiving of analog value (group) = AN
├─ ELSE_IF <    >
│   └─ State of the calling indication = KON
└─ THEN <    >
    └─ Archiving of analog value (group) = AUS
```

The reproduction, transmission or use of this document or its contents is not permitted without express written authority. Offenders will be liable for damages. All rights, including rights created by patent grant or registration of a utility model or design, are reserved.
Proprietary data, company confidential. All rights reserved. Confie a titre de secret d'entreprise. Tous droits réservés. Comunicado como segredo empresarial. Reservados todos os direitos. Confiado como secreto industrial. Nos reservamos todos los derechos.

Documentation structur: Standard
Source file: KO050722.ODA

Rev.	Remarks	Date	Name	Date	22.07.2005	VSZ KOSICE	SIEMENS AG ISA TOOLS	Substation control system 6MB Function for command derivation	T = /BP 2
				Drawn	LANG				+
				Appr.					
				Norm		Orig./Repl. 1/Repl. by		Table	-S113 Page 2

Name of function: Feldsperre

Cancel after first fulfilled rule: Yes
Application as: Bay-related
With information status processing: Yes

```
Function for command derivation <Feldsperre>
├─ IF <    >
│   └─ Read state from (    , ZABLOKOVANI POLE, from same area)= zap.
├─ THEN <    >
│   └─ Start operating sequence with (    , STATUS, from same area)= Informationssperre ein
├─ ELSE_IF <    >
│   └─ Read state from (    , ZABLOKOVANI POLE, from same area)= vyp.
└─ THEN <    >
    └─ Start operating sequence with (    , STATUS, from same area)= Informationssperre aus
```

Proprietary data, company confidential. All rights reserved.
Confie a titre de secret d'entreprise. Tous droits réservés.
Comunicado como segredo empresarial. Reservados todos os direitos.
Confiado como secreto industrial. Nos reservamos todos los derechos.

The reproduction, transmission or use of this document or its
is not permitted without express written authority.
Offenders will be liable for damages. All rights, including rights
created by patent grant or registration of a utility model or design, are reserved.

Documentation structur: Standard
Source file: KO050722.ODA

			Date	22.07.2005	VSZ KOSICE	SIEMENS AG ISA TOOLS	Substation control system 6MB Function for command derivation	T = /BP 3
			Drawn	LANG				+
			Appr.					-S113 Page
R	Remarks	Date	Name	Norm	Orig./Repl. 1/Repl. by		Table	

Name of function: FP-Livekontakt

Cancel after first fulfilled rule: Yes
Application as: Bay-related
With information status processing: No

```
Function for command derivation <FP-Livekontakt>
├─ IF <    >
│   └─ State of the calling indication = ZAC
└─ THEN <    >
    └─ Command without checkback from (GERAETE-STATUSMELDUNGEN, LZG, LIVEKONTAKT) = ZAC
```

The reproduction, transmission or use of this document or its is not permitted without expres written authority. Offenders will be liable for damages. All rights, including rights created by patent grant or registration of a utility model or design, are reserved. Proprietary data, company confidential. All rights reserved. Confie a titre de secret d'entreprise. Tous droits r,serv,s. Comunicado como segredo empresarial. Reservados todos os direitos. Confiado como secreto industrial. Nos reservamos todos los derechos.

Name of function: LED EIN/AUS

Cancel after first fulfilled rule: Yes
Application as: Bay-related
With information status processing: Yes

```
Function for command derivation <LED EIN/AUS>
├─ IF <    >
│  └─ Read state from (ALLGEMEIN, LED) = zap.
├─ THEN <    >
│  └─ Set flag setting of (GERAETE-STATUSMELDUNGEN, LZG, LED GESAMTBEFEHL) = zap.
├─ ELSE_IF <    >
│  └─ Read state from (ALLGEMEIN, LED) = vyp.
└─ THEN <    >
   └─ Set flag setting of (GERAETE-STATUSMELDUNGEN, LZG, LED GESAMTBEFEHL) = vyp.
```

Proprietary data, company confidential. All rights reserved.
Confie a tre de secret d'entreprise. Tous droits reserves.
Comunicado como segredo empresarial. Reservados todos os direitos.
Confiado como secreto industrial. Nos reservamos todos los derechos.
The reproduction, transmission or use of this document or its
is not permitted without express written authority.
Offenders will be liable for damages. All rights, including rights
created by patent grant or registration of a utility model or design, are reserved.

Documentation structur: Standard
Source file: KO050722.ODA

			Date	22.07.2005	VSZ KOSICE	SIEMENS AG ISA TOOLS	Substation control system 6MB Function for command derivation	T = /BP 5
			Drawn	LANG				+
			Appr.					
F	Remarks	Date	Name	Norm	Orig./Repl. 1/Repl. by		Table	-S113 Page 5

Name of function: LED TEST

Cancel after first fulfilled rule: Yes
Application as: Bay-related
With information status processing: Yes

```
Function for command derivation <LED TEST>
├─ IF <    >
│   └─ Read state from (ALLGEMEIN, LED ZKOUSKA) = zap.
└─ THEN <    >
    └─ Start operating sequence with (GERAETE-STATUSMELDUNGEN, LZG, LED-ANZEIGENTEST) = sf. LED TEST
```

The reproduction, transmission or use of this document or its is not permitted without express written authority. Offenders will be liable for damages. All rights, including rights created by patent grant or registration of a utility model or design, are reserved
Proprietary data, company confidential. All rights reserved. Confie a titre de secret d'entreprise. Tous droits réservés. Comunicado como segredo empresarial. Reservados todos os direitos. Confiado como secreto industrial. Nos reservamos todos los derechos.

Documentation structur: Standard
Source file: KO050722.ODA

Rev.	Remarks	Date	Name	Date	22.07.2005	VSZ KOSICE	SIEMENS AG ISA TOOLS	Substation control system 6MB Function for command derivation	T = /BP 6
				Drawn	LANG				+
				Appr.					-S113 Page 6
				Norm		Orig./Repl. 1/Repl. by		Table	

Name of function: Messwertanstoss Kupplung aus

Cancel after first fulfilled rule: Yes
Application as: Bay-related
With information status processing: No

```
Function for command derivation <Messwertanstoss Kupplung aus>
├─ IF <    >
│   └─ Triggering directly with (Initiation information) = JA
└─ THEN <    >
    └─ Start operating sequence with (R110, EA05, Mark.Messwerte 5Sek.) = Sf. Messanstoss Kupplung aus
```

The reproduction, transmission or use of this document or its is not permitted without express written authority. Offenders will be liable for damages. All rights, including rights created by patent grant or registration of a utility model or design, are reserved
Proprietary data, company confidential. All rights reserved. Confia a tfre de secret d'entreprise. Tous droits r,serv,s. Comunicado como segredo empresarial. Reservados todos os direitos. Confiado como secreto industrial. Nos reservamos todos los derechos.

Documentation structur: Standard
Source file: KO050722.ODA

			Date	22.07.2005	VSZ	SIEMENS AG	Substation control system 6MB	T	= /BP 7
			Drawn	LANG	KOSICE	ISAOOLS	Function for command derivation		+
			Appr.						
R	Remarks	Date	Name	Norm	Orig./Repl. 1/Repl. by		Table	-S113	Page 7

Name of function: Stop 7VK

Cancel after first fulfilled rule: Yes
Application as: Bay-related
With information status processing: No

```
Function for command derivation <Stop 7VK>
├─ IF <    >
│   └─ Triggering directly with (Initiation information) = JA
└─ THEN <    >
    └─ Enable = JA
```

Proprietary data, company confidential. All rights reserved.
Confie a titre de secret d'entreprise. Tous droits réservés.
Comunicado como segredo empresarial. Reservados todos os direitos.
Confiado como secreto industrial. Nos reservamos todos los derechos.

The reproduction, transmission or use of this document or its is not permitted without express written authority.
Offenders will be liable for damages. All rights, including rights created by patent grant or registration of a utility model or design, are reserved.

Documentation structur: Standard
Source file: KO050722.ODA

Rev.	Remarks	Date	Name	Date	22.07.2005	VSZ KOSICE	SIEMENS AG SAIOOLS	Substation control system 6MB Function for command derivation	T = /BP 8
				Drawn	LANG				+
				Appr.					-S113 Page 8
				Norm		Orig./Repl. 1/Repl. by		Table	

Name of function: TR Reglerarteinstellung

Cancel after first fulfilled rule: Yes
Application as: Bay-related
With information status processing: No

```
Function for command derivation <TR Reglerarteinstellung>
├─ IF <   >
│  └─ AND <   >
│     ├─ Read state from (REGUAL, DRUH REGULACE, from same area)= AUTO
│     └─ State of the calling indication = RUCNE
├─ THEN <   >
│  ├─ Set flag setting of (REGUAL, DRUH REGULACE, from same area)= RUCNE
│  └─ Derivation of an indication (   , Regulace U zap, from same area)= KON
├─ ELSE_IF <   >
│  └─ AND <   >
│     ├─ Read state from (REGUAL, DRUH REGULACE, from same area)= RUCNE
│     └─ State of the calling indication = AUTO
├─ THEN <   >
│  ├─ Set flag setting of (REGUAL, DRUH REGULACE, from same area)= AUTO
│  └─ Derivation of an indication (   , Regulace U zap, from same area)= ZAC
├─ ELSE_IF <   >
│  └─ AND <   >
│     ├─ State of the calling indication = POR.
│     └─ OR <   >
│        ├─ Read state from (REGUAL, DRUH REGULACE, from same area)= AUTO
│        └─ Read state from (REGUAL, DRUH REGULACE, from same area)= RUCNE
└─ THEN <   >
   └─ Set flag setting of (REGUAL, DRUH REGULACE, from same area)= POR.
```

Proprietary data, company confidential. All rights reserved.
Confie a titre de secret d'entreprise. Tous droits reservés.
Comunicado como segredo empresarial. Reservados todos os direitos.
Confiado como secreto industrial. Nos reservamos todos los derechos.
The reproduction, transmission or use of this document or its is not permitted without expres written authority.
Offenders will be liable for damages. All rights, including rights created by patent grant or registration of a utility model or design, are reserved.

Documentation structur: Standard
Source file: KO050722.ODA

			Date	22.07.2005	VSZ KOSICE	SIEMENS AG ISA TOOLS	Substation control system 6MB Function for command derivation	T = /BP 9	
			Drawn	LANG				+	
			Appr.					-S113	Page
R	Remarks	Date	Name	Norm	Orig./Repl. 1/Repl. by		Table		

Name of function: TR Sollwerteinstellung

Cancel after first fulfilled rule: Yes
Application as: Bay-related
With information status processing: No

```
Function for command derivation <TR Sollwerteinstellung>
 ├─ IF <   >
 │   └─ AND <   >
 │       ├─ State of the calling indication = N0
 │       └─ OR <   >
 │           ├─ Read state from (REGUAL, STAV ZAD. HODN., from same area)= N1
 │           ├─ Read state from (REGUAL, STAV ZAD. HODN., from same area)= N2
 │           └─ Read state from (REGUAL, STAV ZAD. HODN., from same area)= N3
 ├─ THEN <   >
 │   └─ Set flag setting of (REGUAL, STAV ZAD. HODN., from same area)= N0
 ├─ ELSE_IF <   >
 │   └─ AND <   >
 │       ├─ State of the calling indication = N1
 │       └─ OR <   >
 │           ├─ Read state from (REGUAL, STAV ZAD. HODN., from same area)= N0
 │           ├─ Read state from (REGUAL, STAV ZAD. HODN., from same area)= N2
 │           └─ Read state from (REGUAL, STAV ZAD. HODN., from same area)= N3
 ├─ THEN <   >
 │   └─ Set flag setting of (REGUAL, STAV ZAD. HODN., from same area)= N1
 ├─ ELSE_IF <   >
 │   └─ AND <   >
 │       ├─ State of the calling indication = N2
 │       └─ OR <   >
 │           ├─ Read state from (REGUAL, STAV ZAD. HODN., from same area)= N1
 │           ├─ Read state from (REGUAL, STAV ZAD. HODN., from same area)= N0
 │           └─ Read state from (REGUAL, STAV ZAD. HODN., from same area)= N3
 ├─ THEN <   >
 │   └─ Set flag setting of (REGUAL, STAV ZAD. HODN., from same area)= N2
 └─ ELSE_IF <   >
     └─ AND <   >
         ├─ State of the calling indication = N3
         └─ OR <   >
             ├─ Read state from (REGUAL, STAV ZAD. HODN., from same area)= N1
             ├─ Read state from (REGUAL, STAV ZAD. HODN., from same area)= N2
             └─ Read state from (REGUAL, STAV ZAD. HODN., from same area)= N0
```

Proprietary data, company confidential. All rights reserved
Confia a ltrto de ser de dominio de empresa. Todos direitos reservados
Comunicado como segredo empresarial. Reservados todos os direitos.
Confiado como secreto industrial. Nos reservamos todos los derechos.
The reproduction, transmission or use of this document or its
is not permited without expres written authority.
Offenders will be liable for damages. All rights, including rights
created by patent grant or registration of a utility model or design, are reserved

Documentation structur: Standard
Source file: KO050722.ODA

Rev.	Remarks	Date	Name	Norm	Date 22.07.2005	Drawn LANG	Appr.	Orig./Repl. 1/Repl. by

VSZ KOSICE

SIEMENS AG
ISAOOLS

Substation control system 6MB
Function for command derivation
Table

T = /BP 10
+
-S113
Page 10

Name of function: TR Sollwerteinstellung

Cancel after first fulfilled rule: Yes
Application as: Bay-related
With information status processing: No

```
├─ THEN <    >
│  └─ Set flag setting of (REGUAL, STAV ZAD. HODN., from same area)= N3
├─ ELSE_IF <    >
│  └─ State of the calling indication = S0
├─ THEN <    >
│  └─ Set flag setting of (REGUAL, STAV ZAD. HODN., from same area)= S0
├─ ELSE_IF <    >
│  └─ State of the calling indication = S1
├─ THEN <    >
│  └─ Set flag setting of (REGUAL, STAV ZAD. HODN., from same area)= S1
├─ ELSE_IF <    >
│  └─ State of the calling indication = S2
├─ THEN <    >
│  └─ Set flag setting of (REGUAL, STAV ZAD. HODN., from same area)= S2
├─ ELSE_IF <    >
│  └─ State of the calling indication = S3
└─ THEN <    >
   └─ Set flag setting of (REGUAL, STAV ZAD. HODN., from same area)= S3
```

Proprietary data, company confidential. All rights reserved.
Confie a titre de secret d'entreprise. Tous droits reservés.
Comunicado como segredo empresarial. Reservados todos os direitos.
Confiado como secreto industrial. Nos reservamos todos los derechos.

The reproduction, transmission or use of this document or its is not permitted without express written authority.
Offenders will be liable for damages. All rights, including rights created by patent grant or registration of a utility model or design, are reserved

Documentation structur: Standard
Source file: KO050722.ODA

			Date	22.07.2005	VSZ KOSICE	SIEMENS AG ISA TOOLS	Substation control system 6MB Function for command derivation	T = /BP 11
			Drawn	LANG				+
			Appr.					-S113 Page 11
F	Remarks	Date	Name Norm		Orig./Repl. 1/Repl. by		Table	

Name of function: 7SJ511 POSOBENIE PLAST OCHR

Cancel after first fulfilled rule: Yes
Application as: Bay-related
With information status processing: No

```
Function for indication derivation <7SJ511 POSOBENIE PLAST OCHR>
├─ IF <Sammelmeldung>
│   └─ AND <    >
│       ├─ State of the calling indication = KOM
│       └─ Read state from (    , POSOBENIE PLAST.OCHR, from same area)= GEH
├─ THEN <Sammelmeldung>
│   └─ Derivation of an indication (    , POSOBENIE PLAST.OCHR, from same area)= KOM
├─ ELSE_IF <Sammelmeldung>
│   └─ AND <    >
│       ├─ State of the calling indication = GEH
│       ├─ Read state from (    , POSOBENIE PLAST.OCHR, from same area)= KOM
│       └─ Read state from (7SJ511, ANWENDERDEF. MELDUNG 1, from same area)= GEH
└─ THEN <Sammelmeldung>
    └─ Derivation of an indication (    , POSOBENIE PLAST.OCHR, from same area)= GEH
```

The reproduction, transmission or use of this document or its contents is not permitted without express written authority. Offenders will be liable for damages. All rights, including rights created by patent grant or registration of a utility model or design, are reserved. Proprietary data, company confidential. All rights reserved. Confie a titre de secret d'entreprise. Tous droits réservés. Comunicado como segredo empresarial. Reservados todos os direitos. Confiado como secreto industrial. Nos reservamos todos los derechos.

Documentation structur: Standard
Source file: KO050722.ODA

Rev.	Remarks	Date	Name	Date	22.07.2005	VSZ KOSICE	SIEMENS AG ISAOOLS	Substation control system 6MB Function for indication derivation	T = /BP 12
				Drawn	LANG				+
				Appr.					-S113 Page 12
				Norm		Orig./Repl. 1/Repl. by		Table	

Name of function: 7SJ511 ROZPENIE OCHRANAMIE

Cancel after first fulfilled rule: Yes
Application as: Bay-related
With information status processing: No

```
Function for indication derivation <7SJ511 ROZPENIE OCHRANAMIE>
 ├─ IF <Sammelmeldung>
 │   └─ AND <    >
 │       ├─ State of the calling indication = KOM
 │       └─ Read state from (    , ROZPOJENIE OCHRNAMI, from same area)= GEH
 ├─ THEN <Sammelmeldung>
 │   └─ Derivation of an indication (    , ROZPOJENIE OCHRNAMI, from same area)= KOM
 ├─ ELSE_IF <Sammelmeldung>
 │   └─ AND <    >
 │       ├─ State of the calling indication = GEH
 │       ├─ Read state from (    , ROZPOJENIE OCHRNAMI, from same area)= KOM
 │       ├─ Read state from (7SJ511, ANWENDERDEF. MELDUNG 1, from same area)= GEH
 │       └─ Read state from (7SJ511, ANWENDERDEF. MELDUNG 1, from same area)= GEH
 └─ THEN <Sammelmeldung>
     └─ Derivation of an indication (    , ROZPOJENIE OCHRNAMI, from same area)= GEH
```

Proprietary data, company confidential. All rights reserved.
Confia a infra de secret d'entreprise. Tous droits réservés.
Comunicado como segredo empresarial. Reservados todos os direitos.
Confiado como secreto industrial. Nos reservamos todos los derechos.
The reproduction, transmission or use of this document or its contents is not permitted without express written authority. Offenders will be liable for damages. All rights, including rights created by patent grant or registration of a utility model or design, are reserved.

Documentation structur: Standard
Source file: KO050722.ODA

				Date	22.07.2005	VSZ KOSICE	SIEMENS AG ISATOOLS	Substation control system 6MB Function for indication derivation	T = /BP 13
				Drawn	LANG				+
				Appr.					-S113 Page 13
R	Remarks	Date	Name	Norm		Orig./Repl. 1/Repl. by		Table	

Name of function: 7SJ512 OCHRANA NADOBY VYPNUTI

Cancel after first fulfilled rule: Yes
Application as: Bay-related
With information status processing: No

```
Function for indication derivation <7SJ512 OCHRANA NADOBY VYPNUTI>
├─ IF <Sammelmeldung>
│  └─ AND <    >
│     ├─ State of the calling indication = KOM
│     └─ Read state from (    , OCHRANA NADOBY VYPNUTY, from same area)= GEH
├─ THEN <Sammelmeldung>
│  └─ Derivation of an indication (    , OCHRANA NADOBY VYPNUTY, from same area)= KOM
├─ ELSE_IF <Sammelmeldung>
│  └─ AND <    >
│     ├─ State of the calling indication = GEH
│     ├─ Read state from (    , OCHRANA NADOBY VYPNUTY, from same area)= KOM
│     └─ Read state from (7SJ512, ANWENDERDEF. MELDUNG 1, from same area)= GEH
└─ THEN <Sammelmeldung>
   └─ Derivation of an indication (    , OCHRANA NADOBY VYPNUTY, from same area)= GEH
```

The reproduction, transmission or use of this document or its contents is not permitted without express written authority. Offenders will be liable for damages. All rights, including rights created by patent grant or registration of a utility model or design, are reserved.
Proprietary data, company confidential. All rights reserved. Confie a titre de secret d'entreprise. Tous droits réservés. Comunicado como segredo empresarial. Reservados todos os direitos. Confiado como secreto industrial. Nos reservamos todos los derechos.

Documentation structur: Standard
Source file: KO050722.ODA

Rev.	Remarks	Date	Name	Date	22.07.2005	VSZ KOSICE	SIEMENS AG ISAOOLS	Substation control system 6MB Function for indication derivation	T = /BP 14
				Drawn	LANG				+
				Appr.					-S113 Page 14
				Norm		Orig./Repl. 1/Repl. by		Table	

Name of function: 7SJ512 ROZPOJINIE OCHRANAMIE

Cancel after first fulfilled rule: Yes
Application as: Bay-related
With information status processing: No

```
Function for indication derivation <7SJ512 ROZPOJINIE OCHRANAMIE>
├─ IF <Sammelmeldung>
│   └─ AND <    >
│       ├─ State of the calling indication = KOM
│       └─ Read state from (    , ROZPOJENIE OCHRNAMI, from same area)= GEH
├─ THEN <Sammelmeldung>
│   └─ Derivation of an indication (    , ROZPOJENIE OCHRNAMI, from same area)= KOM
├─ ELSE_IF <Sammelmeldung>
│   └─ AND <    >
│       ├─ State of the calling indication = GEH
│       ├─ Read state from (    , ROZPOJENIE OCHRNAMI, from same area)= KOM
│       └─ Read state from (7SJ512, ANWENDERDEF. MELDUNG 1, from same area)= GEH
└─ THEN <Sammelmeldung>
    └─ Derivation of an indication (    , ROZPOJENIE OCHRNAMI, from same area)= GEH
```

The reproduction, transmission or use of this document or its is not permitted without express written authority. Offenders will be liable for damages. All rights, including rights created by patent grant or registration of a utility model or design, are reserved.
Proprietary data, company confidential. All rights reserved. Confie a titre de secret d'entreprise. Tous droits reservés. Comunicado como segredo empresarial. Reservados todos os direitos. Confiado como secreto industrial. Nos reservamos todos los derechos.

Documentation structur: Standard
Source file: KO050722.ODA

			Date	22.07.2005	VSZ KOSICE	SIEMENS AG ISA TOOLS	Substation control system 6MB Function for indication derivation	T = /BP 15	
			Drawn	LANG				+	
			Appr.					-S113	Page
R	Remarks	Date	Name Norm		Orig./Repl. 1/Repl. by		Table		

Name of function: FELDMERKER FUER GAENDE VOM EAG

Cancel after first fulfilled rule: Yes
Application as: Bay-related
With information status processing: No

```
Function for indication derivation <FELDMERKER FUER GAENDE VOM EAG>
├─ IF <    >
│   └─ AND <W12 U1 FELD 06 = (GAENDE GEH UND FM KOM)>
│       ├─ Triggering directly with (GERAETE-STATUSMELDUNGEN, R110 EA01 EAG/3, GA-ENDE-MARKIERUNG) = JA
│       ├─ Read state from (Initiation information) = KON
│       └─ Read state from (R110, EA01/3, FELDMERKER FUER GAENDE) = ZAC
├─ THEN <    >
│   └─ Derivation of an indication (R110, EA01/3, FELDMERKER FUER GAENDE) = KON
├─ ELSE_IF <    >
│   └─ AND <W12 U1 FELD 06 = (GAENDE GEH UND FM KOM)>
│       ├─ Triggering directly with (GERAETE-STATUSMELDUNGEN, R110 EA11 EAG, GA-ENDE-MARKIERUNG) = JA
│       ├─ Read state from (Initiation information) = KON
│       └─ Read state from (R110, EA11, FELDMERKER FUER GAENDE) = ZAC
└─ THEN <    >
    └─ Derivation of an indication (R110, EA11, FELDMERKER FUER GAENDE) = KON
```

Proprietary data, company confidential. All rights reserved.
Confie a titre de secret d'entreprise. Tous droits reservés.
Comunicado como segredo empresarial. Reservados todos os direitos.
Confiado como secreto industrial. Nos reservamos todos los derechos.

The reproduction, transmission or use of this document or its is not permitted without express written authority. Offenders will be liable for damages. All rights, including rights created by patent grant or registration of a utility model or design, are reserved.

Documentation structur: Standard
Source file: KO050722.ODA

Rev.	Remarks	Date	Name	Date	22.07.2005	VSZ KOSICE	SIEMENS AG ISA TOOLS	Substation control system 6MB Function for indication derivation	T = /BP 16
				Drawn	LANG				+
				Appr.					
				Norm		Orig./Repl. 1/Repl. by		Table	-S113 Page 16

Name of function: KA2 NADRP.OCHR.POSOBENIE

Cancel after first fulfilled rule: Yes
Application as: Higher-level
With information status processing: No

```
Function for indication derivation <KA2 NADRP.OCHR.POSOBENIE>
├─ IF <   >
│  └─ AND <   >
│     ├─ Read state from (Initiation information) = KOM
│     └─ Read state from (T60R, KA2, NADPR.OCHR.POSOBENIE) = GEH
├─ THEN <   >
│  └─ Derivation of an indication (T60R, KA2, NADPR.OCHR.POSOBENIE) = KOM
├─ ELSE_IF <   >
│  └─ AND <   >
│     ├─ Read state from (Initiation information) = GEH
│     └─ Read state from (T60R, KA2, NADPR.OCHR.POSOBENIE) = KOM
└─ THEN <   >
   └─ Derivation of an indication (T60R, KA2, NADPR.OCHR.POSOBENIE) = GEH
```

Proprietary data, company confidential. All rights reserved.
Confie a titre de secret d'entreprise. Tous droits r.serv.s.
Comunicado como segredo empresarial. Reservados todos os direitos.
Confiado como secreto industrial. Nos reservamos todos los derechos.
The reproduction, transmission or use of this document or its is not permitted without express written authority.
Offenders will be liable for damages. All rights, including rights created by patent grant or registration of a utility model or design, are reserved.

Documentation structur: Standard
Source file: KO050722.ODA

			Date	22.07.2005	VSZ	SIEMENS AG	Substation control system 6MB	T	= /BP 17
			Drawn	LANG	KOSICE	ISA TOOLS	Function for indication derivation		+
			Appr.						
R	Remarks	Date	Name	Norm	Orig./Repl. 1/Repl. by		Table	-S113	Page 17

Name of function: KA4 NADRP.OCHR.POSOBENIE

Cancel after first fulfilled rule: Yes
Application as: Higher-level
With information status processing: No

```
Function for indication derivation <KA4 NADRP.OCHR.POSOBENIE>
├─ IF <   >
│  └─ AND <   >
│     ├─ Read state from (Initiation information) = KOM
│     └─ Read state from (T60R, KA4, NADPR.OCHR.POSOBENIE) = GEH
├─ THEN <   >
│  └─ Derivation of an indication (T60R, KA4, NADPR.OCHR.POSOBENIE) = KOM
├─ ELSE_IF <   >
│  └─ AND <   >
│     ├─ Read state from (Initiation information) = GEH
│     └─ Read state from (T60R, KA4, NADPR.OCHR.POSOBENIE) = KOM
└─ THEN <   >
   └─ Derivation of an indication (T60R, KA4, NADPR.OCHR.POSOBENIE) = GEH
```

Proprietary data, company confidential. All rights reserved.
Confia a titre de secret dentreprise. Tous droits reservs.
Comunicado como segredo empresarial. Reservados todos os direitos.
Confiado como secreto industrial. Nos reservamos todos los derechos.
The reproduction, transmission or use of this document or its
is not permitted without expres written authority.
Offenders will be liable for damages. All rights, including rights
created by patent grant or registration of a utility model or design, are reserved.

Name of function: KVIT 8TK

Cancel after first fulfilled rule: Yes
Application as: Bay-related
With information status processing: No

```
Function for indication derivation <KVIT 8TK>
├─ IF <   >
│  └─ OR <   >
│     ├─ AND <   >
│     │  ├─ Read state from (   , KVIT 8TK, from same area)= GEH
│     │  ├─ Read state from (Initiation information) = KOM
│     │  └─ Triggering directly with (   , KVIT 8TK, from same area)= NEIN
│     └─ AND <   >
│        ├─ Read state from (   , KVIT 8TK, from same area)= GEH
│        └─ Information type of the calling indication = WISCHER
├─ THEN <   >
│  └─ Derivation of an indication (   , KVIT 8TK, from same area)= KOM
├─ ELSE_IF <   >
│  └─ AND <   >
│     ├─ Read state from (   , KVIT 8TK, from same area)= KOM
│     ├─ Read state from (   , 8TK PORUCHA, from same area)= GEH
│     ├─ Read state from (   , CHYBA OBSLUHY, from same area)= GEH
│     └─ Read state from (   , PREKROCENIE CASU BEHU, from same area)= GEH
└─ THEN <   >
   └─ Derivation of an indication (   , KVIT 8TK, from same area)= GEH
```

The reproduction, transmission or use of this document or its is not permitted without express written authority. Offenders will be liable for damages. All rights, including rights created by patent grant or registration of a utility model or design, are reserved.
Proprietary data, company confidential. All rights reserved. Confie a titre de secret d'entreprise. Tous droits r.serv.s. Comunicado como segredo empresarial. Reservados todos os direitos. Confiado como secreto industrial. Nos reservamos todos los derechos.

Documentation structur: Standard
Source file: KO050722.ODA

			Date	22.07.2005	VSZ KOSICE	SIEMENS AG ISA TOOLS	Substation control system 6MB Function for indication derivation	T = /BP 19 +
			Drawn	LANG				
			Appr.					-S113 Page
R	Remarks	Date	Name	Norm	Orig./Repl. 1/Repl. by		Table	

Name of function: LA1 BUCHHOLZ

Cancel after first fulfilled rule: Yes
Application as: Higher-level
With information status processing: No

```
Function for indication derivation <LA1 BUCHHOLZ>
├─ IF <    >
│   └─ AND <    >
│       ├─ Read state from (Initiation information) = KOM
│       └─ Read state from (T10, LA1, BUCHHOLZ) = GEH
├─ THEN <    >
│   └─ Derivation of an indication (T10, LA1, BUCHHOLZ) = KOM
├─ ELSE_IF <    >
│   └─ AND <    >
│       ├─ Read state from (Initiation information) = GEH
│       └─ Read state from (T10, LA1, BUCHHOLZ) = KOM
└─ THEN <    >
    └─ Derivation of an indication (T10, LA1, BUCHHOLZ) = GEH
```

Proprietary data, company confidential. All rights reserved.
Confie a titre de secret d'entreprise. Tous droits réservés.
Comunicado como segredo empresarial. Reservados todos os direitos.
Confiado como secreto industrial. Nos reservamos todos los derechos.

The reproduction, transmission or use of this document or its is not permitted without expres written authority.
Offenders will be liable for damages. All rights, including rights created by patent grant or registration of a utility model or design, are reserved.

Documentation structur: Standard
Source file: KO050722.ODA

Rev.	Remarks	Date	Name	Date	22.07.2005	VSZ KOSICE	SIEMENS AG ISA TOOLS	Substation control system 6MB Function for indication derivation	T = /BP 20
				Drawn	LANG				+
				Appr.					
				Norm		Orig./Repl. 1/Repl. by		Table	-S113 Page 20

Name of function: LA109 NADRP.OCHR.POSOBENIE

Cancel after first fulfilled rule: Yes
Application as: Higher-level
With information status processing: No

```
Function for indication derivation <LA109 NADRP.OCHR.POSOBENIE>
├─ IF <    >
│  └─ AND <    >
│     ├─ Read state from (Initiation information) = KOM
│     └─ Read state from (T60, LA109, NADPR.OCHR.POSOBENIE) = GEH
├─ THEN <    >
│  └─ Derivation of an indication (T60, LA109, NADPR.OCHR.POSOBENIE) = KOM
├─ ELSE_IF <    >
│  └─ AND <    >
│     ├─ Read state from (Initiation information) = GEH
│     └─ Read state from (T60, LA109, NADPR.OCHR.POSOBENIE) = KOM
└─ THEN <    >
   └─ Derivation of an indication (T60, LA109, NADPR.OCHR.POSOBENIE) = GEH
```

Proprietary data, company confidential. All rights reserved.
Confie a titre de secret d'entreprise. Tous droits reservés.
Comunicado como segredo empresarial. Reservados todos os direitos.
Confiado como secreto industrial. Nos reservamos todos los derechos.

The reproduction, transmission or use of this document or its is not permitted without express written authority.
Offenders will be liable for damages. All rights, including rights created by patent grant or registration of a utility model or design, are reserved.

Documentation structur: Standard
Source file: KO050722.ODA

			Date	22.07.2005	VSZ KOSICE	SIEMENS AG SAOOLS	Substation control system 6MB Function for indication derivation	T = /BP 21	
			Drawn	LANG				+	
			Appr.					-S113	Page 21
R	Remarks	Date	Name Norm		Orig./Repl. 1/Repl. by		Table		

Name of function: LA203 NADRP.OCHR.POSOBENIE

Cancel after first fulfilled rule: Yes
Application as: Higher-level
With information status processing: No

```
Function for indication derivation <LA203 NADRP.OCHR.POSOBENIE>
├─ IF <   >
│  └─ AND <   >
│     ├─ Read state from (Initiation information) = KOM
│     └─ Read state from (T60, LA203, NADPR.OCHR.POSOBENIE) = GEH
├─ THEN <   >
│  └─ Derivation of an indication (T60, LA203, NADPR.OCHR.POSOBENIE) = KOM
├─ ELSE_IF <   >
│  └─ AND <   >
│     ├─ Read state from (Initiation information) = GEH
│     └─ Read state from (T60, LA203, NADPR.OCHR.POSOBENIE) = KOM
└─ THEN <   >
   └─ Derivation of an indication (T60, LA203, NADPR.OCHR.POSOBENIE) = GEH
```

Proprietary data, company confidential. All rights reserved.
Confia a tire da secret d'entreprise. Tous droits r.serv.s.
Comunicado como segredo empresarial. Reservados todos os direitos.
Confiado como secreto industrial. Nos reservamos todos los derechos.
The reproduction, transmission or use of this document or its
is not permitted without expres written authority.
Offenders will be liable for damages. All rights, including rights
created by patent grant or registration of a utility model or design, are reserved.

Documentation structur: Standard
Source file: KO050722.ODA

Rev.	Remarks	Date	Name			
				Date	22.07.2005	
				Drawn	LANG	
				Appr.		
				Norm		

VSZ
KOSICE

Orig./Repl. 1/Repl. by

SIEMENS AG
ISA TOOLS

Substation control system 6MB
Function for indication derivation

Table

T = /BP 22
+
-S113
Page 22

Name of function: LA309 NADRP.OCHR.POSOBENIE

Cancel after first fulfilled rule: Yes
Application as: Higher-level
With information status processing: No

```
Function for indication derivation <LA309 NADRP.OCHR.POSOBENIE>
├─ IF <    >
│   └─ AND <    >
│       ├─ Read state from (Initiation information) = KOM
│       └─ Read state from (T60, LA309, NADPR.OCHR.POSOBENIE) = GEH
├─ THEN <    >
│   └─ Derivation of an indication (T60, LA309, NADPR.OCHR.POSOBENIE) = KOM
├─ ELSE_IF <    >
│   └─ AND <    >
│       ├─ Read state from (Initiation information) = GEH
│       └─ Read state from (T60, LA309, NADPR.OCHR.POSOBENIE) = KOM
└─ THEN <    >
    └─ Derivation of an indication (T60, LA309, NADPR.OCHR.POSOBENIE) = GEH
```

Proprietary data, company confidential. All rights reserved.
Confie a titre de secret d'entreprise. Tous droits réservés.
Comunicado como segredo empresarial. Reservados todos os direitos.
Confiado como secreto industrial. Nos reservamos todos los derechos.
The reproduction, transmission or use of this document or its
is not permitted without express written authority.
Offenders will be liable for damages. All rights, including rights
created by patent grant or registration of a utility model or design, are reserved.

Documentation structur: Standard
Source file: KO050722.ODA

			Date	22.07.2005	VSZ KOSICE	SIEMENS AG ISA TOOLS	Substation control system 6MB Function for indication derivation	T	= /BP 23
			Drawn	LANG					+
			Appr.						
R	Remarks	Date	Name	Norm	Orig./Repl. 1/Repl. by		Table		-S113 Page

Name of function: LA403 NADRP.OCHR.POSOBENIE

Cancel after first fulfilled rule: Yes
Application as: Higher-level
With information status processing: No

```
Function for indication derivation <LA403 NADRP.OCHR.POSOBENIE>
 ├─ IF <    >
 │   └─ AND <    >
 │       ├─ Read state from (Initiation information) = KOM
 │       └─ Read state from (T60, LA403, NADPR.OCHR.POSOBENIE) = GEH
 ├─ THEN <    >
 │   └─ Derivation of an indication (T60, LA403, NADPR.OCHR.POSOBENIE) = KOM
 ├─ ELSE_IF <    >
 │   └─ AND <    >
 │       ├─ Read state from (Initiation information) = GEH
 │       └─ Read state from (T60, LA403, NADPR.OCHR.POSOBENIE) = KOM
 └─ THEN <    >
     └─ Derivation of an indication (T60, LA403, NADPR.OCHR.POSOBENIE) = GEH
```

Proprietary data, company confidential. All rights reserved.
Confie a tire de secret d'entreprise. Tous droits r.serv.
Comunicado como segredo empresarial. Reservados todos os direitos.
Confiado como secreto industrial. Nos reservamos todos los derechos.
The reproduction, transmission or use of this document or its
is not permitted without expres written authority.
Offenders will be liable for damages. All rights, including rights
created by patent grant or registration of a utility model or design, are reserved.

Documentation structur: Standard
Source file: KO050722.ODA

				Date	22.07.2005	VSZ KOSICE	SIEMENS AG ISATOOLS	Substation control system 6MB Function for indication derivation	T = /BP 24
				Drawn	LANG				+
				Appr.					-S113 Page 24
Rev.	Remarks	Date	Name	Norm		Orig./Repl. 1/Repl. by		Table	

Name of function: LA6 BUCHHOLZ

Cancel after first fulfilled rule: Yes
Application as: Higher-level
With information status processing: No

```
Function for indication derivation <LA6 BUCHHOLZ>
├─ IF <   >
│   └─ AND <   >
│       ├─ Read state from (Initiation information) = KOM
│       └─ Read state from (T30, LA6, BUCHHOLZ) = GEH
├─ THEN <   >
│   └─ Derivation of an indication (T30, LA6, BUCHHOLZ) = KOM
├─ ELSE_IF <   >
│   └─ AND <   >
│       ├─ Read state from (Initiation information) = GEH
│       └─ Read state from (T30, LA6, BUCHHOLZ) = KOM
└─ THEN <   >
    └─ Derivation of an indication (T30, LA6, BUCHHOLZ) = GEH
```

Proprietary data, company confidential. All rights reserved.
Confie a titre de secret d'entreprise. Tous droits reservs.
Comunicado como segredo empresarial. Reservados todos os direitos.
Confiado como secreto industrial. Nos reservamos todos los derechos.

The reproduction, transmission or use of this document or its
is not permitted without expres written authority.
Offenders will be liable for damages. All rights, including rights
created by patent grant or registration of a utility model or design, are reserved.

Documentation structur: Standard
Source file: KO050722.ODA

			Date	22.07.2005	VSZ KOSICE	SIEMENS AG ISA TOOLS	Substation control system 6MB Function for indication derivation	T = /BP 25	
			Drawn	LANG				+	
			Appr.					-S113	Page
R	Remarks	Date	Name	Norm	Orig./Repl. 1/Repl. by		Table		

Name of function: POSBENI KOSTR.OCHR.

Cancel after first fulfilled rule: Yes
Application as: Bay-related
With information status processing: No

```
Function for indication derivation <POSBENI KOSTR.OCHR.>
├─ IF <    >
│  └─ AND <    >
│     ├─ State of the calling indication = KOM
│     └─ Read state from (    , POSOBENI KOSTR.OCHR., from same area)= GEH
├─ THEN <    >
│  └─ Derivation of an indication (    , POSOBENI KOSTR.OCHR., from same area)= KOM
├─ ELSE_IF <    >
│  └─ AND <    >
│     ├─ State of the calling indication = GEH
│     ├─ Read state from (    , POSOBENI KOSTR.OCHR., from same area)= KOM
│     └─ Read state from (7UT513, OCHRANA NADOBY VYPNUTIE, from same area)= GEH
└─ THEN <    >
   └─ Derivation of an indication (    , POSOBENI KOSTR.OCHR., from same area)= GEH
```

The reproduction, transmission or use of this document or its is not permitted without express written authority. Offenders will be liable for damages. All rights, including rights created by patent grant or registration of a utility model or design, are reserved.
Proprietary data, company confidential. All rights reserved. Confie a titre de secret d'entreprise. Tous droits réservés. Comunicado como segredo empresarial. Reservados todos os direitos. Confiado como secreto industrial. Nos reservamos todos los derechos.

Documentation structur: Standard
Source file: KO050722.ODA

Rev.	Remarks	Date	Name	Date	22.07.2005	VSZ KOSICE	SIEMENS AG ISAOOLS	Substation control system 6MB Function for indication derivation	T = /BP 26
				Drawn	LANG				+
				Appr.					
				Norm		Orig./Repl. 1/Repl. by		Table	-S113 Page 26

Name of function: TRAFOREGLER STUFUNG

Cancel after first fulfilled rule: Yes
Application as: Bay-related
With information status processing: No

```
Function for indication derivation <TRAFOREGLER STUFUNG>
├─ IF <   >
│  └─ OR <   >
│     ├─ AND <   >
│     │  ├─ State of the calling indication = NAHORU
│     │  └─ Read state from (TRAFO, ODBOCKA ST.C., from same area)= 19
│     └─ AND <   >
│        ├─ State of the calling indication = DOLU
│        └─ Read state from (TRAFO, ODBOCKA ST.C., from same area)= 01
├─ THEN <   >
│  └─ Derivation of an indication (REGUAL, KONCOVA POLOHA, from same area)= ZAC
├─ ELSE_IF <   >
│  └─ State of the calling indication = NAHORU
├─ THEN <   >
│  └─ Start operating sequence with (TRAFO, ODBOCKA VO FAZE, from same area)= Sf. TR Traforegler Stufung hoeher
├─ ELSE_IF <   >
│  └─ State of the calling indication = DOLU
└─ THEN <   >
   └─ Start operating sequence with (TRAFO, ODBOCKA VO FAZE, from same area)= Sf. TR Traforegler Stufung tiefer
```

The reproduction, transmission or use of this document or its contents is not permitted without express written authority. Offenders will be liable for damages. All rights, including rights created by patent grant or registration of a utility model or design, are reserved. Proprietary data, company confidential. All rights reserved. Confie a tire de secret d'entreprise. Tous droits reservés. Comunicado como segredo empresarial. Reservados todos os direitos. Confiado como secreto industrial. Nos reservamos todos los derechos.

Name of function: TRAFOSTUFEN T201 Q,X,Y

Cancel after first fulfilled rule: Yes
Application as: Bay-related
With information status processing: No

```
Function for indication derivation <TRAFOSTUFEN T201 Q,X,Y>
├─ IF <    >
│  └─ OR <    >
│     ├─ AND <    >
│     │  ├─ Read state from (R220, T201  L1, TRAFO, ODBOCKA ST.C.) = 01
│     │  ├─ Read state from (R220, T201  L2, TRAFO, ODBOCKA ST.C.) = 01
│     │  └─ Read state from (R220, TR.    Q, TRAFO, ODBOCKA ST.C.) = 01
│     ├─ AND <    >
│     │  ├─ Read state from (R220, T201  L1, TRAFO, ODBOCKA ST.C.) = 02
│     │  ├─ Read state from (R220, T201  L2, TRAFO, ODBOCKA ST.C.) = 02
│     │  └─ Read state from (R220, TR.    Q, TRAFO, ODBOCKA ST.C.) = 02
│     ├─ AND <    >
│     │  ├─ Read state from (R220, T201  L1, TRAFO, ODBOCKA ST.C.) = 03
│     │  ├─ Read state from (R220, T201  L2, TRAFO, ODBOCKA ST.C.) = 03
│     │  └─ Read state from (R220, TR.    Q, TRAFO, ODBOCKA ST.C.) = 03
│     ├─ AND <    >
│     │  ├─ Read state from (R220, T201  L1, TRAFO, ODBOCKA ST.C.) = 04
│     │  ├─ Read state from (R220, T201  L2, TRAFO, ODBOCKA ST.C.) = 04
│     │  └─ Read state from (R220, TR.    Q, TRAFO, ODBOCKA ST.C.) = 04
│     ├─ AND <    >
│     │  ├─ Read state from (R220, T201  L1, TRAFO, ODBOCKA ST.C.) = 05
│     │  ├─ Read state from (R220, T201  L2, TRAFO, ODBOCKA ST.C.) = 05
│     │  └─ Read state from (R220, TR.    Q, TRAFO, ODBOCKA ST.C.) = 05
│     ├─ AND <    >
│     │  ├─ Read state from (R220, T201  L1, TRAFO, ODBOCKA ST.C.) = 06
│     │  ├─ Read state from (R220, T201  L2, TRAFO, ODBOCKA ST.C.) = 06
│     │  └─ Read state from (R220, TR.    Q, TRAFO, ODBOCKA ST.C.) = 06
│     ├─ AND <    >
│     │  ├─ Read state from (R220, T201  L1, TRAFO, ODBOCKA ST.C.) = 07
│     │  ├─ Read state from (R220, T201  L2, TRAFO, ODBOCKA ST.C.) = 07
│     │  └─ Read state from (R220, TR.    Q, TRAFO, ODBOCKA ST.C.) = 07
│     ├─ AND <    >
│     │  ├─ Read state from (R220, T201  L1, TRAFO, ODBOCKA ST.C.) = 08
│     │  ├─ Read state from (R220, T201  L2, TRAFO, ODBOCKA ST.C.) = 08
│     │  └─ Read state from (R220, TR.    Q, TRAFO, ODBOCKA ST.C.) = 08
```

Proprietary data, company confidential. All rights reserved.
Confia a tiro de secret d'entreprise. Tous droits réservés.
Comunicado como segredo empresarial. Reservados todos os direitos.
Confiado como secreto industrial. Nos reservamos todos los derechos.

The reproduction, transmission or use of this document or its is not permitted without express written authority.
Offenders will be liable for damages. All rights, including rights created by patent grant or registration of a utility model or design, are reserved

Documentation structur: Standard
Source file: KO050722.ODA

Rev.	Remarks	Date	Name	Date	22.07.2005	VSZ KOSICE	SIEMENS AG ISAOOLS	Substation control system 6MB Function for indication derivation	T = /BP 28
				Drawn	LANG				+
				Appr.					-S113 Page 28
				Norm		Orig./Repl. 1/Repl. by		Table	

Name of function: TRAFOSTUFEN T201 Q,X,Y

Cancel after first fulfilled rule: Yes
Application as: Bay-related
With information status processing: No

```
├─ AND <   >
│  ├─ Read state from (R220, T201  L1, TRAFO, ODBOCKA ST.C.) = 09
│  ├─ Read state from (R220, T201  L2, TRAFO, ODBOCKA ST.C.) = 09
│  └─ Read state from (R220, TR.    Q, TRAFO, ODBOCKA ST.C.) = 09
├─ AND <   >
│  ├─ Read state from (R220, T201  L1, TRAFO, ODBOCKA ST.C.) = 10
│  ├─ Read state from (R220, T201  L2, TRAFO, ODBOCKA ST.C.) = 10
│  └─ Read state from (R220, TR.    Q, TRAFO, ODBOCKA ST.C.) = 10
├─ AND <   >
│  ├─ Read state from (R220, T201  L1, TRAFO, ODBOCKA ST.C.) = 11
│  ├─ Read state from (R220, T201  L2, TRAFO, ODBOCKA ST.C.) = 11
│  └─ Read state from (R220, TR.    Q, TRAFO, ODBOCKA ST.C.) = 11
├─ AND <   >
│  ├─ Read state from (R220, T201  L1, TRAFO, ODBOCKA ST.C.) = 12
│  ├─ Read state from (R220, T201  L2, TRAFO, ODBOCKA ST.C.) = 12
│  └─ Read state from (R220, TR.    Q, TRAFO, ODBOCKA ST.C.) = 12
├─ AND <   >
│  ├─ Read state from (R220, T201  L1, TRAFO, ODBOCKA ST.C.) = 13
│  ├─ Read state from (R220, T201  L2, TRAFO, ODBOCKA ST.C.) = 13
│  └─ Read state from (R220, TR.    Q, TRAFO, ODBOCKA ST.C.) = 13
├─ AND <   >
│  ├─ Read state from (R220, T201  L1, TRAFO, ODBOCKA ST.C.) = 14
│  ├─ Read state from (R220, T201  L2, TRAFO, ODBOCKA ST.C.) = 14
│  └─ Read state from (R220, TR.    Q, TRAFO, ODBOCKA ST.C.) = 14
├─ AND <   >
│  ├─ Read state from (R220, T201  L1, TRAFO, ODBOCKA ST.C.) = 15
│  ├─ Read state from (R220, T201  L2, TRAFO, ODBOCKA ST.C.) = 15
│  └─ Read state from (R220, TR.    Q, TRAFO, ODBOCKA ST.C.) = 15
├─ AND <   >
│  ├─ Read state from (R220, T201  L1, TRAFO, ODBOCKA ST.C.) = 16
│  ├─ Read state from (R220, T201  L2, TRAFO, ODBOCKA ST.C.) = 16
│  └─ Read state from (R220, TR.    Q, TRAFO, ODBOCKA ST.C.) = 16
├─ AND <   >
│  ├─ Read state from (R220, T201  L1, TRAFO, ODBOCKA ST.C.) = 17
│  ├─ Read state from (R220, T201  L2, TRAFO, ODBOCKA ST.C.) = 17
```

Proprietary data, company confidential. All rights reserved
Confie a titre de secret d'entreprise. Tous droits réservés.
Comunicado como segredo empresarial. Reservados todos os direitos.
Confiado como secreto industrial. Nos reservamos todos los derechos.
The reproduction, transmission or use of this document or its is not permitted without express written authority.
Offenders will be liable for damages. All rights, including rights created by patent grant or registration of a utility model or design, are reserved

Name of function: TRAFOSTUFEN T201 Q,X,Y

Cancel after first fulfilled rule: Yes
Application as: Bay-related
With information status processing: No

```
        │   └─ Read state from (R220, TR.    Q, TRAFO, ODBOCKA ST.C.) = 17
        │ ├─ AND <    >
        │   ├─ Read state from (R220, T201  L1, TRAFO, ODBOCKA ST.C.) = 18
        │   ├─ Read state from (R220, T201  L2, TRAFO, ODBOCKA ST.C.) = 18
        │   └─ Read state from (R220, TR.    Q, TRAFO, ODBOCKA ST.C.) = 18
        └─ AND <    >
            ├─ Read state from (R220, T201  L1, TRAFO, ODBOCKA ST.C.) = 19
            ├─ Read state from (R220, T201  L2, TRAFO, ODBOCKA ST.C.) = 19
            └─ Read state from (R220, TR.    Q, TRAFO, ODBOCKA ST.C.) = 19
├─ THEN <    >
│  └─ Derivation of an indication (R220, T201, PORUCHA PARAL.REG.) = KON
└─ ELSE <    >
   └─ Derivation of an indication (R220, T201, PORUCHA PARAL.REG.) = ZAC
```

Proprietary data, company confidential. All rights reserved
Contains trade secret information. Total or partial reproduction, use or disclosure without written authorization is prohibited. Offenders will be liable for damages. All rights, including rights created by patent grant or registration of a utility model or design, are reserved
Contiene información de secreto comercial. Toda reproducción o divulgación parcial o total sin autorización escrita está prohibida. Los infractores serán responsables de los daños y perjuicios. Todos los derechos reservados, incluyendo los derechos creados por patente o registro de un modelo de utilidad o diseño industrial.
Contém segredo comercial. Qualquer reprodução ou divulgação parcial ou total sem autorização escrita é proibida. Os infratores serão responsáveis por perdas e danos. Todos os direitos reservados, incluindo os direitos criados por patente ou registro de um modelo de utilidade ou desenho industrial.

Name of function: TRAFOSTUFEN T201 Q,X,Z

Cancel after first fulfilled rule: Yes
Application as: Bay-related
With information status processing: No

```
Function for indication derivation <TRAFOSTUFEN T201 Q,X,Z>
├─ IF <    >
└─ OR <    >
    ├─ AND <    >
    │  ├─ Read state from (R220, T201  L1, TRAFO, ODBOCKA ST.C.) = 01
    │  ├─ Read state from (R220, T201  L3, TRAFO, ODBOCKA ST.C.) = 01
    │  └─ Read state from (R220, TR.    Q, TRAFO, ODBOCKA ST.C.) = 01
    ├─ AND <    >
    │  ├─ Read state from (R220, T201  L1, TRAFO, ODBOCKA ST.C.) = 02
    │  ├─ Read state from (R220, T201  L3, TRAFO, ODBOCKA ST.C.) = 02
    │  └─ Read state from (R220, TR.    Q, TRAFO, ODBOCKA ST.C.) = 02
    ├─ AND <    >
    │  ├─ Read state from (R220, T201  L1, TRAFO, ODBOCKA ST.C.) = 03
    │  ├─ Read state from (R220, T201  L3, TRAFO, ODBOCKA ST.C.) = 03
    │  └─ Read state from (R220, TR.    Q, TRAFO, ODBOCKA ST.C.) = 03
    ├─ AND <    >
    │  ├─ Read state from (R220, T201  L1, TRAFO, ODBOCKA ST.C.) = 04
    │  ├─ Read state from (R220, T201  L3, TRAFO, ODBOCKA ST.C.) = 04
    │  └─ Read state from (R220, TR.    Q, TRAFO, ODBOCKA ST.C.) = 04
    ├─ AND <    >
    │  ├─ Read state from (R220, T201  L1, TRAFO, ODBOCKA ST.C.) = 05
    │  ├─ Read state from (R220, T201  L3, TRAFO, ODBOCKA ST.C.) = 05
    │  └─ Read state from (R220, TR.    Q, TRAFO, ODBOCKA ST.C.) = 05
    ├─ AND <    >
    │  ├─ Read state from (R220, T201  L1, TRAFO, ODBOCKA ST.C.) = 06
    │  ├─ Read state from (R220, T201  L3, TRAFO, ODBOCKA ST.C.) = 06
    │  └─ Read state from (R220, TR.    Q, TRAFO, ODBOCKA ST.C.) = 06
    ├─ AND <    >
    │  ├─ Read state from (R220, T201  L1, TRAFO, ODBOCKA ST.C.) = 07
    │  ├─ Read state from (R220, T201  L3, TRAFO, ODBOCKA ST.C.) = 07
    │  └─ Read state from (R220, TR.    Q, TRAFO, ODBOCKA ST.C.) = 07
    ├─ AND <    >
    │  ├─ Read state from (R220, T201  L1, TRAFO, ODBOCKA ST.C.) = 08
    │  ├─ Read state from (R220, T201  L3, TRAFO, ODBOCKA ST.C.) = 08
    │  └─ Read state from (R220, TR.    Q, TRAFO, ODBOCKA ST.C.) = 08
```

Proprietary data, company confidential. All rights reserved.
Confidential de la société. Tous droits réservés.
Comunicado como secreto de empresa. Reservados todos los derechos.
Confidado como secreto industrial. Nos reservamos todos los derechos.
The reproduction, transmission or use of this document or its contents is not permitted without express written authority. Offenders will be liable for damages. All rights, including rights created by patent grant or registration of a utility model or design, are reserved.

Documentation structure: Standard
Source file: KO050722.ODA

Name of function: TRAFOSTUFEN T201 Q,X,Z

Cancel after first fulfilled rule: Yes
Application as: Bay-related
With information status processing: No

```
├─ AND <    >
  ├─ Read state from (R220, T201  L1, TRAFO, ODBOCKA ST.C.) = 09
  ├─ Read state from (R220, T201  L3, TRAFO, ODBOCKA ST.C.) = 09
  └─ Read state from (R220, TR.    Q, TRAFO, ODBOCKA ST.C.) = 09
├─ AND <    >
  ├─ Read state from (R220, T201  L1, TRAFO, ODBOCKA ST.C.) = 10
  ├─ Read state from (R220, T201  L3, TRAFO, ODBOCKA ST.C.) = 10
  └─ Read state from (R220, TR.    Q, TRAFO, ODBOCKA ST.C.) = 10
├─ AND <    >
  ├─ Read state from (R220, T201  L1, TRAFO, ODBOCKA ST.C.) = 11
  ├─ Read state from (R220, T201  L3, TRAFO, ODBOCKA ST.C.) = 11
  └─ Read state from (R220, TR.    Q, TRAFO, ODBOCKA ST.C.) = 11
├─ AND <    >
  ├─ Read state from (R220, T201  L1, TRAFO, ODBOCKA ST.C.) = 12
  ├─ Read state from (R220, T201  L3, TRAFO, ODBOCKA ST.C.) = 12
  └─ Read state from (R220, TR.    Q, TRAFO, ODBOCKA ST.C.) = 12
├─ AND <    >
  ├─ Read state from (R220, T201  L1, TRAFO, ODBOCKA ST.C.) = 13
  ├─ Read state from (R220, T201  L3, TRAFO, ODBOCKA ST.C.) = 13
  └─ Read state from (R220, TR.    Q, TRAFO, ODBOCKA ST.C.) = 13
├─ AND <    >
  ├─ Read state from (R220, T201  L1, TRAFO, ODBOCKA ST.C.) = 14
  ├─ Read state from (R220, T201  L3, TRAFO, ODBOCKA ST.C.) = 14
  └─ Read state from (R220, TR.    Q, TRAFO, ODBOCKA ST.C.) = 14
├─ AND <    >
  ├─ Read state from (R220, T201  L1, TRAFO, ODBOCKA ST.C.) = 15
  ├─ Read state from (R220, T201  L3, TRAFO, ODBOCKA ST.C.) = 15
  └─ Read state from (R220, TR.    Q, TRAFO, ODBOCKA ST.C.) = 15
├─ AND <    >
  ├─ Read state from (R220, T201  L1, TRAFO, ODBOCKA ST.C.) = 16
  ├─ Read state from (R220, T201  L3, TRAFO, ODBOCKA ST.C.) = 16
  └─ Read state from (R220, TR.    Q, TRAFO, ODBOCKA ST.C.) = 16
├─ AND <    >
  ├─ Read state from (R220, T201  L1, TRAFO, ODBOCKA ST.C.) = 17
  ├─ Read state from (R220, T201  L3, TRAFO, ODBOCKA ST.C.) = 17
```

Proprietary data, company confidential. All rights reserved.
Confie a titre de secret d'entreprise. Tous droits r,serv,s.
Comunicado como segredo empresarial. Reservados todos os direitos.
Confiado como secreto industrial. Nos reservamos todos los derechos.
The reproduction, transmission or use of this document or its
is not permitted without expres written authority.
Offenders will be liable for damages. All rights, including rights
created by patent grant or registration of a utility model or design, are reserved

Documentation structur: Standard
Source file: KO050722.ODA

Rev.	Remarks	Date	Name	Date	22.07.2005	VSZ KOSICE	SIEMENS AG ISA TOOLS	Substation control system 6MB Function for indication derivation	T = /BP 32
				Drawn	LANG				+
				Appr.					-S113 Page 32
				Norm		Orig./Repl. 1/Repl. by		Table	

Name of function: TRAFOSTUFEN T201 Q,X,Z

Cancel after first fulfilled rule: Yes
Application as: Bay-related
With information status processing: No

```
│   │   └─ Read state from (R220, TR.    Q, TRAFO, ODBOCKA ST.C.) = 17
│   ├─ AND <   >
│   │   ├─ Read state from (R220, T201  L1, TRAFO, ODBOCKA ST.C.) = 18
│   │   ├─ Read state from (R220, T201  L3, TRAFO, ODBOCKA ST.C.) = 18
│   │   └─ Read state from (R220, TR.    Q, TRAFO, ODBOCKA ST.C.) = 18
│   └─ AND <   >
│       ├─ Read state from (R220, T201  L1, TRAFO, ODBOCKA ST.C.) = 19
│       ├─ Read state from (R220, T201  L3, TRAFO, ODBOCKA ST.C.) = 19
│       └─ Read state from (R220, TR.    Q, TRAFO, ODBOCKA ST.C.) = 19
├─ THEN <   >
│  └─ Derivation of an indication (R220, T201, PORUCHA PARAL.REG.) = KON
└─ ELSE <   >
   └─ Derivation of an indication (R220, T201, PORUCHA PARAL.REG.) = ZAC
```

Proprietary data, company confidential. All rights reserved.
Confie a titre de secret d'entreprise. Tous droits réservés.
Comunicado como segredo empresarial. Reservados todos os direitos.
Confiado como secreto industrial. Nos reservamos todos los derechos.
The reproduction, transmission or use of this document or its
is not permitted without express written authority.
Offenders will be liable for damages. All rights, including rights
created by patent grant or registration of a utility model or design, are reserved.

Documentation structur: Standard
Source file: KO050722.ODA

				Date	22.07.2005	VSZ KOSICE	SIEMENS AG ISA TOOLS	Substation control system 6MB Function for indication derivation	T = /BP 33
				Drawn	LANG				+
				Appr.					
R	Remarks	Date	Name	Norm		Orig./Repl. 1/Repl. by		Table	-S113 Page

Name of function: TRAFOSTUFEN T201 Q,Y,Z

Cancel after first fulfilled rule: Yes
Application as: Bay-related
With information status processing: No

```
Function for indication derivation <TRAFOSTUFEN T201 Q,Y,Z>
├─ IF <   >
│  └─ OR <   >
│     ├─ AND <   >
│     │  ├─ Read state from (R220, T201  L2, TRAFO, ODBOCKA ST.C.) = 01
│     │  ├─ Read state from (R220, T201  L3, TRAFO, ODBOCKA ST.C.) = 01
│     │  └─ Read state from (R220, TR.    Q, TRAFO, ODBOCKA ST.C.) = 01
│     ├─ AND <   >
│     │  ├─ Read state from (R220, T201  L2, TRAFO, ODBOCKA ST.C.) = 02
│     │  ├─ Read state from (R220, T201  L3, TRAFO, ODBOCKA ST.C.) = 02
│     │  └─ Read state from (R220, TR.    Q, TRAFO, ODBOCKA ST.C.) = 02
│     ├─ AND <   >
│     │  ├─ Read state from (R220, T201  L2, TRAFO, ODBOCKA ST.C.) = 03
│     │  ├─ Read state from (R220, T201  L3, TRAFO, ODBOCKA ST.C.) = 03
│     │  └─ Read state from (R220, TR.    Q, TRAFO, ODBOCKA ST.C.) = 03
│     ├─ AND <   >
│     │  ├─ Read state from (R220, T201  L2, TRAFO, ODBOCKA ST.C.) = 04
│     │  ├─ Read state from (R220, T201  L3, TRAFO, ODBOCKA ST.C.) = 04
│     │  └─ Read state from (R220, TR.    Q, TRAFO, ODBOCKA ST.C.) = 04
│     ├─ AND <   >
│     │  ├─ Read state from (R220, T201  L2, TRAFO, ODBOCKA ST.C.) = 05
│     │  ├─ Read state from (R220, T201  L3, TRAFO, ODBOCKA ST.C.) = 05
│     │  └─ Read state from (R220, TR.    Q, TRAFO, ODBOCKA ST.C.) = 05
│     ├─ AND <   >
│     │  ├─ Read state from (R220, T201  L2, TRAFO, ODBOCKA ST.C.) = 06
│     │  ├─ Read state from (R220, T201  L3, TRAFO, ODBOCKA ST.C.) = 06
│     │  └─ Read state from (R220, TR.    Q, TRAFO, ODBOCKA ST.C.) = 06
│     ├─ AND <   >
│     │  ├─ Read state from (R220, T201  L2, TRAFO, ODBOCKA ST.C.) = 07
│     │  ├─ Read state from (R220, T201  L3, TRAFO, ODBOCKA ST.C.) = 07
│     │  └─ Read state from (R220, TR.    Q, TRAFO, ODBOCKA ST.C.) = 07
│     ├─ AND <   >
│     │  ├─ Read state from (R220, T201  L2, TRAFO, ODBOCKA ST.C.) = 08
│     │  ├─ Read state from (R220, T201  L3, TRAFO, ODBOCKA ST.C.) = 08
│     │  └─ Read state from (R220, TR.    Q, TRAFO, ODBOCKA ST.C.) = 08
```

Proprietary data, company confidential. All rights reserved.
Confia a titre de secret d'entreprise. Tous droits réservés.
Comunicado como segredo empresarial. Reservados todos os direitos
Confiado como secreto industrial. Nos reservamos todos los derechos.
The reproduction, transmission or use of this document or its is not permitted without express written authority.
Offenders will be liable for damages. All rights, including rights created by patent grant or registration of a utility model or design, are reserved

Documentation structur: Standard
Source file: KO050722.ODA

Rev.	Remarks	Date	Name	Date	22.07.2005	VSZ KOSICE	SIEMENS AG ISAOOLS	Substation control system 6MB Function for indication derivation	T = /BP 34
				Drawn	LANG				+
				Appr.					-S113 Page 34
				Norm		Orig./Repl. 1/Repl. by		Table	

Name of function: TRAFOSTUFEN T201 Q,Y,Z

Cancel after first fulfilled rule: Yes
Application as: Bay-related
With information status processing: No

```
├─ AND <    >
│  ├─ Read state from (R220, T201  L2, TRAFO, ODBOCKA ST.C.) = 09
│  ├─ Read state from (R220, T201  L3, TRAFO, ODBOCKA ST.C.) = 09
│  └─ Read state from (R220, TR.    Q, TRAFO, ODBOCKA ST.C.) = 09
├─ AND <    >
│  ├─ Read state from (R220, T201  L2, TRAFO, ODBOCKA ST.C.) = 10
│  ├─ Read state from (R220, T201  L3, TRAFO, ODBOCKA ST.C.) = 10
│  └─ Read state from (R220, TR.    Q, TRAFO, ODBOCKA ST.C.) = 10
├─ AND <    >
│  ├─ Read state from (R220, T201  L2, TRAFO, ODBOCKA ST.C.) = 11
│  ├─ Read state from (R220, T201  L3, TRAFO, ODBOCKA ST.C.) = 11
│  └─ Read state from (R220, TR.    Q, TRAFO, ODBOCKA ST.C.) = 11
├─ AND <    >
│  ├─ Read state from (R220, T201  L2, TRAFO, ODBOCKA ST.C.) = 12
│  ├─ Read state from (R220, T201  L3, TRAFO, ODBOCKA ST.C.) = 12
│  └─ Read state from (R220, TR.    Q, TRAFO, ODBOCKA ST.C.) = 12
├─ AND <    >
│  ├─ Read state from (R220, T201  L2, TRAFO, ODBOCKA ST.C.) = 13
│  ├─ Read state from (R220, T201  L3, TRAFO, ODBOCKA ST.C.) = 13
│  └─ Read state from (R220, TR.    Q, TRAFO, ODBOCKA ST.C.) = 13
├─ AND <    >
│  ├─ Read state from (R220, T201  L2, TRAFO, ODBOCKA ST.C.) = 14
│  ├─ Read state from (R220, T201  L3, TRAFO, ODBOCKA ST.C.) = 14
│  └─ Read state from (R220, TR.    Q, TRAFO, ODBOCKA ST.C.) = 14
├─ AND <    >
│  ├─ Read state from (R220, T201  L2, TRAFO, ODBOCKA ST.C.) = 15
│  ├─ Read state from (R220, T201  L3, TRAFO, ODBOCKA ST.C.) = 15
│  └─ Read state from (R220, TR.    Q, TRAFO, ODBOCKA ST.C.) = 15
├─ AND <    >
│  ├─ Read state from (R220, T201  L2, TRAFO, ODBOCKA ST.C.) = 16
│  ├─ Read state from (R220, T201  L3, TRAFO, ODBOCKA ST.C.) = 16
│  └─ Read state from (R220, TR.    Q, TRAFO, ODBOCKA ST.C.) = 16
├─ AND <    >
│  ├─ Read state from (R220, T201  L2, TRAFO, ODBOCKA ST.C.) = 17
│  ├─ Read state from (R220, T201  L3, TRAFO, ODBOCKA ST.C.) = 17
```

The reproduction, transmission or use of this document or its is not permitted without express written authority. Offenders will be liable for damages. All rights, including rights created by patent grant or registration of a utility model or design, are reserved
Proprietary data, company confidential. All rights reserved. Confie a titre de secret d'entreprise. Tous droits réservés. Comunicado como segredo empresarial. Reservados todos os direitos. Confiado como secreto industrial. Nos reservamos todos los derechos.

Documentation structur: Standard
Source file: KO050722.ODA

			Date	22.07.2005	VSZ KOSICE	SIEMENS AG ISA TOOLS	Substation control system 6MB Function for indication derivation	T = /BP 35	
			Drawn	LANG				+	
			Appr.					-S113	Page 25
F	Remarks	Date	Name	Norm	Orig./Repl. 1/Repl. by		Table		

Name of function: TRAFOSTUFEN T201 Q,Y,Z

Cancel after first fulfilled rule: Yes
Application as: Bay-related
With information status processing: No

```
│   │   └─ Read state from (R220, TR.    Q, TRAFO, ODBOCKA ST.C.) = 17
│   ├─ AND <   >
│   │   ├─ Read state from (R220, T201  L2, TRAFO, ODBOCKA ST.C.) = 18
│   │   ├─ Read state from (R220, T201  L3, TRAFO, ODBOCKA ST.C.) = 18
│   │   └─ Read state from (R220, TR.    Q, TRAFO, ODBOCKA ST.C.) = 18
│   └─ AND <   >
│       ├─ Read state from (R220, T201  L2, TRAFO, ODBOCKA ST.C.) = 19
│       ├─ Read state from (R220, T201  L3, TRAFO, ODBOCKA ST.C.) = 19
│       └─ Read state from (R220, TR.    Q, TRAFO, ODBOCKA ST.C.) = 19
├─ THEN <   >
│  └─ Derivation of an indication (R220, T201, PORUCHA PARAL.REG.) = KON
└─ ELSE <   >
   └─ Derivation of an indication (R220, T201, PORUCHA PARAL.REG.) = ZAC
```

Proprietary data, company confidential. All rights reserved.
Confie a titre de secret d'entreprise. Tous droits réservés.
Comunicado como segredo empresarial. Reservados todos os direitos.
Confiado como secreto industrial. Nos reservamos todos los derechos.
The reproduction, transmission or use of this document or its is not permitted without express written authority.
Offenders will be liable for damages. All rights, including rights created by patent grant or registration of a utility model or design, are reserved.

Documentation structur: Standard
Source file: KO050722.ODA

Rev.	Remarks	Date	Name	Date	22.07.2005	VSZ KOSICE	SIEMENS AG ISA TOOLS	Substation control system 6MB Function for indication derivation	T = /BP 36
				Drawn	LANG				+
				Appr.					
				Norm		Orig./Repl. 1/Repl. by		Table	-S113 Page 36

Name of function: TRAFOSTUFEN T201 X,Y,Z

Cancel after first fulfilled rule: Yes
Application as: Bay-related
With information status processing: No

```
Function for indication derivation <TRAFOSTUFEN T201 X,Y,Z>
 ├─ IF <   >
 │   └─ OR <   >
 │       ├─ AND <   >
 │       │   ├─ Read state from (R220, T201  L1, TRAFO, ODBOCKA ST.C.) = 01
 │       │   ├─ Read state from (R220, T201  L2, TRAFO, ODBOCKA ST.C.) = 01
 │       │   └─ Read state from (R220, T201  L3, TRAFO, ODBOCKA ST.C.) = 01
 │       ├─ AND <   >
 │       │   ├─ Read state from (R220, T201  L1, TRAFO, ODBOCKA ST.C.) = 02
 │       │   ├─ Read state from (R220, T201  L2, TRAFO, ODBOCKA ST.C.) = 02
 │       │   └─ Read state from (R220, T201  L3, TRAFO, ODBOCKA ST.C.) = 02
 │       ├─ AND <   >
 │       │   ├─ Read state from (R220, T201  L1, TRAFO, ODBOCKA ST.C.) = 03
 │       │   ├─ Read state from (R220, T201  L2, TRAFO, ODBOCKA ST.C.) = 03
 │       │   └─ Read state from (R220, T201  L3, TRAFO, ODBOCKA ST.C.) = 03
 │       ├─ AND <   >
 │       │   ├─ Read state from (R220, T201  L1, TRAFO, ODBOCKA ST.C.) = 04
 │       │   ├─ Read state from (R220, T201  L2, TRAFO, ODBOCKA ST.C.) = 04
 │       │   └─ Read state from (R220, T201  L3, TRAFO, ODBOCKA ST.C.) = 04
 │       ├─ AND <   >
 │       │   ├─ Read state from (R220, T201  L1, TRAFO, ODBOCKA ST.C.) = 05
 │       │   ├─ Read state from (R220, T201  L2, TRAFO, ODBOCKA ST.C.) = 05
 │       │   └─ Read state from (R220, T201  L3, TRAFO, ODBOCKA ST.C.) = 05
 │       ├─ AND <   >
 │       │   ├─ Read state from (R220, T201  L1, TRAFO, ODBOCKA ST.C.) = 06
 │       │   ├─ Read state from (R220, T201  L2, TRAFO, ODBOCKA ST.C.) = 06
 │       │   └─ Read state from (R220, T201  L3, TRAFO, ODBOCKA ST.C.) = 06
 │       ├─ AND <   >
 │       │   ├─ Read state from (R220, T201  L1, TRAFO, ODBOCKA ST.C.) = 07
 │       │   ├─ Read state from (R220, T201  L2, TRAFO, ODBOCKA ST.C.) = 07
 │       │   └─ Read state from (R220, T201  L3, TRAFO, ODBOCKA ST.C.) = 07
 │       ├─ AND <   >
 │       │   ├─ Read state from (R220, T201  L1, TRAFO, ODBOCKA ST.C.) = 08
 │       │   ├─ Read state from (R220, T201  L2, TRAFO, ODBOCKA ST.C.) = 08
 │       │   └─ Read state from (R220, T201  L3, TRAFO, ODBOCKA ST.C.) = 08
```

Proprietary data, company confidential. All rights reserved.
Confie a titre de secret d'entreprise. Tous droits réservés.
Comunicado como segredo empresarial. Reservados todos os direitos.
Confiado como secreto industrial. Nos reservamos todos los derechos.
The reproduction, transmission or use of this document or its is not permitted without express written authority.
Offenders will be liable for damages. All rights, including rights created by patent grant or registration of a utility model or design, are reserved.

Documentation structur: Standard
Source file: KO050722.ODA

			Date	22.07.2005	VSZ KOSICE	SIEMENS AG ISAOOLS	Substation control system 6MB Function for indication derivation	T = /BP 37 +	
			Drawn	LANG					
			Appr.					-S113	Page 37
F	Remarks	Date	Name	Norm	Orig./Repl. 1/Repl. by		Table		

Name of function: TRAFOSTUFEN T201 X,Y,Z

Cancel after first fulfilled rule: Yes
Application as: Bay-related
With information status processing: No

```
├─ AND <    >
│  ├─ Read state from (R220, T201  L1, TRAFO, ODBOCKA ST.C.) = 09
│  ├─ Read state from (R220, T201  L2, TRAFO, ODBOCKA ST.C.) = 09
│  └─ Read state from (R220, T201  L3, TRAFO, ODBOCKA ST.C.) = 09
├─ AND <    >
│  ├─ Read state from (R220, T201  L1, TRAFO, ODBOCKA ST.C.) = 10
│  ├─ Read state from (R220, T201  L2, TRAFO, ODBOCKA ST.C.) = 10
│  └─ Read state from (R220, T201  L3, TRAFO, ODBOCKA ST.C.) = 10
├─ AND <    >
│  ├─ Read state from (R220, T201  L1, TRAFO, ODBOCKA ST.C.) = 11
│  ├─ Read state from (R220, T201  L2, TRAFO, ODBOCKA ST.C.) = 11
│  └─ Read state from (R220, T201  L3, TRAFO, ODBOCKA ST.C.) = 11
├─ AND <    >
│  ├─ Read state from (R220, T201  L1, TRAFO, ODBOCKA ST.C.) = 12
│  ├─ Read state from (R220, T201  L2, TRAFO, ODBOCKA ST.C.) = 12
│  └─ Read state from (R220, T201  L3, TRAFO, ODBOCKA ST.C.) = 12
├─ AND <    >
│  ├─ Read state from (R220, T201  L1, TRAFO, ODBOCKA ST.C.) = 13
│  ├─ Read state from (R220, T201  L2, TRAFO, ODBOCKA ST.C.) = 13
│  └─ Read state from (R220, T201  L3, TRAFO, ODBOCKA ST.C.) = 13
├─ AND <    >
│  ├─ Read state from (R220, T201  L1, TRAFO, ODBOCKA ST.C.) = 14
│  ├─ Read state from (R220, T201  L2, TRAFO, ODBOCKA ST.C.) = 14
│  └─ Read state from (R220, T201  L3, TRAFO, ODBOCKA ST.C.) = 14
├─ AND <    >
│  ├─ Read state from (R220, T201  L1, TRAFO, ODBOCKA ST.C.) = 15
│  ├─ Read state from (R220, T201  L2, TRAFO, ODBOCKA ST.C.) = 15
│  └─ Read state from (R220, T201  L3, TRAFO, ODBOCKA ST.C.) = 15
├─ AND <    >
│  ├─ Read state from (R220, T201  L1, TRAFO, ODBOCKA ST.C.) = 16
│  ├─ Read state from (R220, T201  L2, TRAFO, ODBOCKA ST.C.) = 16
│  └─ Read state from (R220, T201  L3, TRAFO, ODBOCKA ST.C.) = 16
├─ AND <    >
│  ├─ Read state from (R220, T201  L1, TRAFO, ODBOCKA ST.C.) = 17
│  ├─ Read state from (R220, T201  L2, TRAFO, ODBOCKA ST.C.) = 17
```

Proprietary data, company confidential. All rights reserved
Confie a titre de secret d'entreprise. Tous droits réservés.
Comunicado como segredo empresarial. Reservados todos os direitos.
Confiado como secreto industrial. Nos reservamos todos los derechos.

The reproduction, transmission or use of this document or its is not permitted without expres written authority.
Offenders will be liable for damages. All rights, including rights created by patent grant or registration of a utility model or design, are reserved

Documentation structur: Standard
Source file: KO050722.ODA

Rev.	Remarks	Date	Name	Date	22.07.2005	VSZ KOSICE	SIEMENS AG ISA TOOLS	Substation control system 6MB Function for indication derivation	T = /BP 38
				Drawn	LANG				+
				Appr.					
				Norm		Orig./Repl. 1/Repl. by		Table	-S113 Page 38

Name of function: TRAFOSTUFEN T201 X,Y,Z

Cancel after first fulfilled rule: Yes
Application as: Bay-related
With information status processing: No

```
        └─ Read state from (R220, T201  L3, TRAFO, ODBOCKA ST.C.) = 17
      ├─ AND <    >
        ├─ Read state from (R220, T201  L1, TRAFO, ODBOCKA ST.C.) = 18
        ├─ Read state from (R220, T201  L2, TRAFO, ODBOCKA ST.C.) = 18
        └─ Read state from (R220, T201  L3, TRAFO, ODBOCKA ST.C.) = 18
      └─ AND <    >
        ├─ Read state from (R220, T201  L1, TRAFO, ODBOCKA ST.C.) = 19
        ├─ Read state from (R220, T201  L2, TRAFO, ODBOCKA ST.C.) = 19
        └─ Read state from (R220, T201  L3, TRAFO, ODBOCKA ST.C.) = 19
├─ THEN <    >
  └─ Derivation of an indication (R220, T201, PORUCHA PARAL.REG.) = KON
└─ ELSE <    >
  └─ Derivation of an indication (R220, T201, PORUCHA PARAL.REG.) = ZAC
```

Proprietary data, company confidential. All rights reserved.
Confie a titre de secret d'entreprise. Tous droits r,serv,s.
Comunicado como segredo empresarial. Reservados todos os direitos.
Confiado como secreto industrial. Nos reservamos todos los derechos.

The reproduction, transmission or use of this document or its is not permitted without express written authority.
Offenders will be liable for damages. All rights, including rights created by patent grant or registration of a utility model or design, are reserved

Documentation structur: Standard
Source file: KO050722.ODA

			Date	22.07.2005	VSZ KOSICE	SIEMENS AG ISAOOLS	Substation control system 6MB Function for indication derivation	T = /BP 39
			Drawn	LANG				+
			Appr.					-S113 Page
R	Remarks	Date	Name	Norm	Orig./Repl. 1/Repl. by		Table	

Name of function: TRAFOSTUFEN T202 Q,X,Y

Cancel after first fulfilled rule: Yes
Application as: Bay-related
With information status processing: No

```
Function for indication derivation <TRAFOSTUFEN T202 Q,X,Y>
 ├─ IF <    >
 │   └─ OR <    >
 │       ├─ AND <    >
 │       │   ├─ Read state from (R220, T202  L1, TRAFO, ODBOCKA ST.C.) = 01
 │       │   ├─ Read state from (R220, T202  L2, TRAFO, ODBOCKA ST.C.) = 01
 │       │   └─ Read state from (R220, T202   Q, TRAFO, ODBOCKA ST.C.) = 01
 │       ├─ AND <    >
 │       │   ├─ Read state from (R220, T202  L1, TRAFO, ODBOCKA ST.C.) = 02
 │       │   ├─ Read state from (R220, T202  L2, TRAFO, ODBOCKA ST.C.) = 02
 │       │   └─ Read state from (R220, T202   Q, TRAFO, ODBOCKA ST.C.) = 02
 │       ├─ AND <    >
 │       │   ├─ Read state from (R220, T202  L1, TRAFO, ODBOCKA ST.C.) = 03
 │       │   ├─ Read state from (R220, T202  L2, TRAFO, ODBOCKA ST.C.) = 03
 │       │   └─ Read state from (R220, T202   Q, TRAFO, ODBOCKA ST.C.) = 03
 │       ├─ AND <    >
 │       │   ├─ Read state from (R220, T202  L1, TRAFO, ODBOCKA ST.C.) = 04
 │       │   ├─ Read state from (R220, T202  L2, TRAFO, ODBOCKA ST.C.) = 04
 │       │   └─ Read state from (R220, T202   Q, TRAFO, ODBOCKA ST.C.) = 04
 │       ├─ AND <    >
 │       │   ├─ Read state from (R220, T202  L1, TRAFO, ODBOCKA ST.C.) = 05
 │       │   ├─ Read state from (R220, T202  L2, TRAFO, ODBOCKA ST.C.) = 05
 │       │   └─ Read state from (R220, T202   Q, TRAFO, ODBOCKA ST.C.) = 05
 │       ├─ AND <    >
 │       │   ├─ Read state from (R220, T202  L1, TRAFO, ODBOCKA ST.C.) = 06
 │       │   ├─ Read state from (R220, T202  L2, TRAFO, ODBOCKA ST.C.) = 06
 │       │   └─ Read state from (R220, T202   Q, TRAFO, ODBOCKA ST.C.) = 06
 │       ├─ AND <    >
 │       │   ├─ Read state from (R220, T202  L1, TRAFO, ODBOCKA ST.C.) = 07
 │       │   ├─ Read state from (R220, T202  L2, TRAFO, ODBOCKA ST.C.) = 07
 │       │   └─ Read state from (R220, T202   Q, TRAFO, ODBOCKA ST.C.) = 07
 │       ├─ AND <    >
 │       │   ├─ Read state from (R220, T202  L1, TRAFO, ODBOCKA ST.C.) = 08
 │       │   ├─ Read state from (R220, T202  L2, TRAFO, ODBOCKA ST.C.) = 08
 │       │   └─ Read state from (R220, T202   Q, TRAFO, ODBOCKA ST.C.) = 08
```

Proprietary data, company confidential. All rights reserved
Contains trade secret information. Not to be disclosed or reproduced without written consent.
Comunicado como segredo empresarial. Reservados todos os direitos.
Confiado como secreto industrial. Nos reservamos todos los derechos.
The reproduction, transmission or use of this document or its contents is not permitted without express written authority. Offenders will be liable for damages. All rights, including rights created by patent grant or registration of a utility model or design, are reserved

Documentation structur: Standard
Source file: KO050722.ODA

				Date	22.07.2005	VSZ KOSICE	SIEMENS AG ISATOOLS	Substation control system 6MB Function for indication derivation	T = /BP 40
				Drawn	LANG				+
				Appr.					-S113 Page 40
Rev.	Remarks	Date	Name	Norm		Orig./Repl. 1/Repl. by		Table	

Name of function: TRAFOSTUFEN T202 Q,X,Y

Cancel after first fulfilled rule: Yes
Application as: Bay-related
With information status processing: No

```
├─ AND <    >
│  ├─ Read state from (R220, T202  L1, TRAFO, ODBOCKA ST.C.) = 09
│  ├─ Read state from (R220, T202  L2, TRAFO, ODBOCKA ST.C.) = 09
│  └─ Read state from (R220, T202   Q, TRAFO, ODBOCKA ST.C.) = 09
├─ AND <    >
│  ├─ Read state from (R220, T202  L1, TRAFO, ODBOCKA ST.C.) = 10
│  ├─ Read state from (R220, T202  L2, TRAFO, ODBOCKA ST.C.) = 10
│  └─ Read state from (R220, T202   Q, TRAFO, ODBOCKA ST.C.) = 10
├─ AND <    >
│  ├─ Read state from (R220, T202  L1, TRAFO, ODBOCKA ST.C.) = 11
│  ├─ Read state from (R220, T202  L2, TRAFO, ODBOCKA ST.C.) = 11
│  └─ Read state from (R220, T202   Q, TRAFO, ODBOCKA ST.C.) = 11
├─ AND <    >
│  ├─ Read state from (R220, T202  L1, TRAFO, ODBOCKA ST.C.) = 12
│  ├─ Read state from (R220, T202  L2, TRAFO, ODBOCKA ST.C.) = 12
│  └─ Read state from (R220, T202   Q, TRAFO, ODBOCKA ST.C.) = 12
├─ AND <    >
│  ├─ Read state from (R220, T202  L1, TRAFO, ODBOCKA ST.C.) = 13
│  ├─ Read state from (R220, T202  L2, TRAFO, ODBOCKA ST.C.) = 13
│  └─ Read state from (R220, T202   Q, TRAFO, ODBOCKA ST.C.) = 13
├─ AND <    >
│  ├─ Read state from (R220, T202  L1, TRAFO, ODBOCKA ST.C.) = 14
│  ├─ Read state from (R220, T202  L2, TRAFO, ODBOCKA ST.C.) = 14
│  └─ Read state from (R220, T202   Q, TRAFO, ODBOCKA ST.C.) = 14
├─ AND <    >
│  ├─ Read state from (R220, T202  L1, TRAFO, ODBOCKA ST.C.) = 15
│  ├─ Read state from (R220, T202  L2, TRAFO, ODBOCKA ST.C.) = 15
│  └─ Read state from (R220, T202   Q, TRAFO, ODBOCKA ST.C.) = 15
├─ AND <    >
│  ├─ Read state from (R220, T202  L1, TRAFO, ODBOCKA ST.C.) = 16
│  ├─ Read state from (R220, T202  L2, TRAFO, ODBOCKA ST.C.) = 16
│  └─ Read state from (R220, T202   Q, TRAFO, ODBOCKA ST.C.) = 16
├─ AND <    >
│  ├─ Read state from (R220, T202  L1, TRAFO, ODBOCKA ST.C.) = 17
│  ├─ Read state from (R220, T202  L2, TRAFO, ODBOCKA ST.C.) = 17
```

The reproduction, transmission or use of this document or its contents is not permitted without express written authority. Offenders will be liable for damages. All rights, including rights created by patent grant or registration of a utility model or design, are reserved. Proprietary data, company confidential. All rights reserved. Confie a titre de secret d'entreprise. Tous droits reservés. Comunicado como segredo empressarial. Reservados todos os direitos. Confiado como secreto industrial. Nos reservamos todos los derechos.

Documentation structur: Standard
Source file: KO050722.ODA

			Date	22.07.2005	VSZ KOSICE	SIEMENS AG ISA TOOLS	Substation control system 6MB Function for indication derivation	T =	/BP 41
			Drawn	LANG				+	
			Appr.					-S113	Page 41
Remarks	Date	Name	Norm		Orig./Repl. 1/Repl. by		Table		

Name of function: TRAFOSTUFEN T202 Q,X,Y

Cancel after first fulfilled rule: Yes
Application as: Bay-related
With information status processing: No

```
│   │   └─ Read state from (R220, T202   Q, TRAFO, ODBOCKA ST.C.) = 17
│   ├─ AND <   >
│   │   ├─ Read state from (R220, T202  L1, TRAFO, ODBOCKA ST.C.) = 18
│   │   ├─ Read state from (R220, T202  L2, TRAFO, ODBOCKA ST.C.) = 18
│   │   └─ Read state from (R220, T202   Q, TRAFO, ODBOCKA ST.C.) = 18
│   └─ AND <   >
│       ├─ Read state from (R220, T202  L1, TRAFO, ODBOCKA ST.C.) = 19
│       ├─ Read state from (R220, T202  L2, TRAFO, ODBOCKA ST.C.) = 19
│       └─ Read state from (R220, T202   Q, TRAFO, ODBOCKA ST.C.) = 19
├─ THEN <   >
│  └─ Derivation of an indication (R220, T202, PORUCHA PARAL.REG.) = KON
└─ ELSE <   >
   └─ Derivation of an indication (R220, T202, PORUCHA PARAL.REG.) = ZAC
```

Proprietary data, company confidential. All rights reserved.
Confie a titre de secret d'entreprise. Tous droits reservés.
Comunicado como segredo empresarial. Reservados todos os direitos.
Confiado como secreto industrial. Nos reservamos todos los derechos.
The reproduction, transmission or use of this document or its is not permitted without expres written authority.
Offenders will be liable for damages. All rights, including rights created by patent grant or registration of a utility model or design, are reserved.

Documentation structur: Standard
Source file: KO050722.ODA

Rev.	Remarks	Date	Name	Date	22.07.2005	VSZ KOSICE	SIEMENS AG ISA TOOLS	Substation control system 6MB Function for indication derivation	T = /BP 42
				Drawn	LANG				+
				Appr.					
				Norm		Orig./Repl. 1/Repl. by		Table	-S113 Page 42

Name of function: TRAFOSTUFEN T202 Q,X,Z

Cancel after first fulfilled rule: Yes
Application as: Bay-related
With information status processing: No

```
Function for indication derivation <TRAFOSTUFEN T202 Q,X,Z>
├─ IF <    >
│  └─ OR <    >
│     ├─ AND <    >
│     │  ├─ Read state from (R220, T202  L1, TRAFO, ODBOCKA ST.C.) = 01
│     │  ├─ Read state from (R220, T202  L3, TRAFO, ODBOCKA ST.C.) = 01
│     │  └─ Read state from (R220, T202   Q, TRAFO, ODBOCKA ST.C.) = 01
│     ├─ AND <    >
│     │  ├─ Read state from (R220, T202  L1, TRAFO, ODBOCKA ST.C.) = 02
│     │  ├─ Read state from (R220, T202  L3, TRAFO, ODBOCKA ST.C.) = 02
│     │  └─ Read state from (R220, T202   Q, TRAFO, ODBOCKA ST.C.) = 02
│     ├─ AND <    >
│     │  ├─ Read state from (R220, T202  L1, TRAFO, ODBOCKA ST.C.) = 03
│     │  ├─ Read state from (R220, T202  L3, TRAFO, ODBOCKA ST.C.) = 03
│     │  └─ Read state from (R220, T202   Q, TRAFO, ODBOCKA ST.C.) = 03
│     ├─ AND <    >
│     │  ├─ Read state from (R220, T202  L1, TRAFO, ODBOCKA ST.C.) = 04
│     │  ├─ Read state from (R220, T202  L3, TRAFO, ODBOCKA ST.C.) = 04
│     │  └─ Read state from (R220, T202   Q, TRAFO, ODBOCKA ST.C.) = 04
│     ├─ AND <    >
│     │  ├─ Read state from (R220, T202  L1, TRAFO, ODBOCKA ST.C.) = 05
│     │  ├─ Read state from (R220, T202  L3, TRAFO, ODBOCKA ST.C.) = 05
│     │  └─ Read state from (R220, T202   Q, TRAFO, ODBOCKA ST.C.) = 05
│     ├─ AND <    >
│     │  ├─ Read state from (R220, T202  L1, TRAFO, ODBOCKA ST.C.) = 06
│     │  ├─ Read state from (R220, T202  L3, TRAFO, ODBOCKA ST.C.) = 06
│     │  └─ Read state from (R220, T202   Q, TRAFO, ODBOCKA ST.C.) = 06
│     ├─ AND <    >
│     │  ├─ Read state from (R220, T202  L1, TRAFO, ODBOCKA ST.C.) = 07
│     │  ├─ Read state from (R220, T202  L3, TRAFO, ODBOCKA ST.C.) = 07
│     │  └─ Read state from (R220, T202   Q, TRAFO, ODBOCKA ST.C.) = 07
│     ├─ AND <    >
│     │  ├─ Read state from (R220, T202  L1, TRAFO, ODBOCKA ST.C.) = 08
│     │  ├─ Read state from (R220, T202  L3, TRAFO, ODBOCKA ST.C.) = 08
│     │  └─ Read state from (R220, T202   Q, TRAFO, ODBOCKA ST.C.) = 08
```

Proprietary data, company confidential. All rights reserved.
Confia a ofda de secret dencpriea. Todos os direitos reservados.
Comunicado como segredo empresarial. Reservamos todos os direitos.
Confiado como secreto industrial. Nos reservamos todos los derechos.
The reproduction, transmission or use of this document or its contents is not permitted without express written authority. Offenders will be liable for damages. All rights, including rights created by patent grant or registration of a utility model or design, are reserved.

Documentation structure: Standard
Source file: KO050722.ODA

			Date	22.07.2005	VSZ KOSICE	SIEMENS AG ISAOOLS	Substation control system 6MB Function for indication derivation
			Drawn	LANG			
			Appr.				
Remarks	Date	Name	Norm		Orig./Repl. 1/Repl. by		Table

T = /BP 43
+
-S113
Page

Name of function: TRAFOSTUFEN T202 Q,X,Z

Cancel after first fulfilled rule: Yes
Application as: Bay-related
With information status processing: No

```
├─ AND <    >
│  ├─ Read state from (R220, T202  L1, TRAFO, ODBOCKA ST.C.) = 09
│  ├─ Read state from (R220, T202  L3, TRAFO, ODBOCKA ST.C.) = 09
│  └─ Read state from (R220, T202   Q, TRAFO, ODBOCKA ST.C.) = 09
├─ AND <    >
│  ├─ Read state from (R220, T202  L1, TRAFO, ODBOCKA ST.C.) = 10
│  ├─ Read state from (R220, T202  L3, TRAFO, ODBOCKA ST.C.) = 10
│  └─ Read state from (R220, T202   Q, TRAFO, ODBOCKA ST.C.) = 10
├─ AND <    >
│  ├─ Read state from (R220, T202  L1, TRAFO, ODBOCKA ST.C.) = 11
│  ├─ Read state from (R220, T202  L3, TRAFO, ODBOCKA ST.C.) = 11
│  └─ Read state from (R220, T202   Q, TRAFO, ODBOCKA ST.C.) = 11
├─ AND <    >
│  ├─ Read state from (R220, T202  L1, TRAFO, ODBOCKA ST.C.) = 12
│  ├─ Read state from (R220, T202  L3, TRAFO, ODBOCKA ST.C.) = 12
│  └─ Read state from (R220, T202   Q, TRAFO, ODBOCKA ST.C.) = 12
├─ AND <    >
│  ├─ Read state from (R220, T202  L1, TRAFO, ODBOCKA ST.C.) = 13
│  ├─ Read state from (R220, T202  L3, TRAFO, ODBOCKA ST.C.) = 13
│  └─ Read state from (R220, T202   Q, TRAFO, ODBOCKA ST.C.) = 13
├─ AND <    >
│  ├─ Read state from (R220, T202  L1, TRAFO, ODBOCKA ST.C.) = 14
│  ├─ Read state from (R220, T202  L3, TRAFO, ODBOCKA ST.C.) = 14
│  └─ Read state from (R220, T202   Q, TRAFO, ODBOCKA ST.C.) = 14
├─ AND <    >
│  ├─ Read state from (R220, T202  L1, TRAFO, ODBOCKA ST.C.) = 15
│  ├─ Read state from (R220, T202  L3, TRAFO, ODBOCKA ST.C.) = 15
│  └─ Read state from (R220, T202   Q, TRAFO, ODBOCKA ST.C.) = 15
├─ AND <    >
│  ├─ Read state from (R220, T202  L1, TRAFO, ODBOCKA ST.C.) = 16
│  ├─ Read state from (R220, T202  L3, TRAFO, ODBOCKA ST.C.) = 16
│  └─ Read state from (R220, T202   Q, TRAFO, ODBOCKA ST.C.) = 16
├─ AND <    >
│  ├─ Read state from (R220, T202  L1, TRAFO, ODBOCKA ST.C.) = 17
│  ├─ Read state from (R220, T202  L3, TRAFO, ODBOCKA ST.C.) = 17
```

Documentation structur: Standard
Source file: KO050722.ODA
The reproduction, transmission or use of this document or its contents is not permitted without express written authority. Offenders will be liable for damages. All rights, including rights created by patent grant or registration of a utility model or design, are reserved.
Proprietary data, company confidential. All rights reserved. Confie a titre de secret d'entreprise. Tous droits réservés. Comunicado como segredo empresarial. Reservados todos os direitos. Confiado como secreto industrial. Nos reservamos todos los derechos.

Name of function: TRAFOSTUFEN T202 Q,X,Z

Cancel after first fulfilled rule: Yes
Application as: Bay-related
With information status processing: No

```
│   │   └─ Read state from (R220, T202   Q, TRAFO, ODBOCKA ST.C.) = 17
│   ├─ AND <   >
│   │   ├─ Read state from (R220, T202  L1, TRAFO, ODBOCKA ST.C.) = 18
│   │   ├─ Read state from (R220, T202  L3, TRAFO, ODBOCKA ST.C.) = 18
│   │   └─ Read state from (R220, T202   Q, TRAFO, ODBOCKA ST.C.) = 18
│   └─ AND <   >
│       ├─ Read state from (R220, T202  L1, TRAFO, ODBOCKA ST.C.) = 19
│       ├─ Read state from (R220, T202  L3, TRAFO, ODBOCKA ST.C.) = 19
│       └─ Read state from (R220, T202   Q, TRAFO, ODBOCKA ST.C.) = 19
├─ THEN <   >
│  └─ Derivation of an indication (R220, T202, PORUCHA PARAL.REG.) = KON
└─ ELSE <   >
   └─ Derivation of an indication (R220, T202, PORUCHA PARAL.REG.) = ZAC
```

Proprietary data, company confidential. All rights reserved.
Confie a titre de secret d'entreprise. Tous droits réservés.
Comunicado como segredo empresarial. Reservados todos os direitos.
Confiado como secreto industrial. Nos reservamos todos los derechos.

The reproduction, transmission or use of this document or its is not permitted without express written authority.
Offenders will be liable for damages. All rights, including rights created by patent grant or registration of a utility model or design, are reserved.

Documentation structur: Standard
Source file: KO050722.ODA

			Date	22.07.2005	VSZ KOSICE	SIEMENS AG SAIOOLS	Substation control system 6MB Function for indication derivation	T = /BP 45
			Drawn	LANG				+
			Appr.				Table	-S113 Page
Rev	Remarks	Date	Name	Norm	Orig./Repl. 1/Repl. by			

Name of function: TRAFOSTUFEN T202 Q,Y,Z

Cancel after first fulfilled rule: Yes
Application as: Bay-related
With information status processing: No

```
Function for indication derivation <TRAFOSTUFEN T202 Q,Y,Z>
├─ IF <    >
│  └─ OR <    >
│     ├─ AND <    >
│     │  ├─ Read state from (R220, T202  L3, TRAFO, ODBOCKA ST.C.) = 01
│     │  ├─ Read state from (R220, T202  L2, TRAFO, ODBOCKA ST.C.) = 01
│     │  └─ Read state from (R220, T202   Q, TRAFO, ODBOCKA ST.C.) = 01
│     ├─ AND <    >
│     │  ├─ Read state from (R220, T202  L3, TRAFO, ODBOCKA ST.C.) = 02
│     │  ├─ Read state from (R220, T202  L2, TRAFO, ODBOCKA ST.C.) = 02
│     │  └─ Read state from (R220, T202   Q, TRAFO, ODBOCKA ST.C.) = 02
│     ├─ AND <    >
│     │  ├─ Read state from (R220, T202  L3, TRAFO, ODBOCKA ST.C.) = 03
│     │  ├─ Read state from (R220, T202  L2, TRAFO, ODBOCKA ST.C.) = 03
│     │  └─ Read state from (R220, T202   Q, TRAFO, ODBOCKA ST.C.) = 03
│     ├─ AND <    >
│     │  ├─ Read state from (R220, T202  L3, TRAFO, ODBOCKA ST.C.) = 04
│     │  ├─ Read state from (R220, T202  L2, TRAFO, ODBOCKA ST.C.) = 04
│     │  └─ Read state from (R220, T202   Q, TRAFO, ODBOCKA ST.C.) = 04
│     ├─ AND <    >
│     │  ├─ Read state from (R220, T202  L3, TRAFO, ODBOCKA ST.C.) = 05
│     │  ├─ Read state from (R220, T202  L2, TRAFO, ODBOCKA ST.C.) = 05
│     │  └─ Read state from (R220, T202   Q, TRAFO, ODBOCKA ST.C.) = 05
│     ├─ AND <    >
│     │  ├─ Read state from (R220, T202  L3, TRAFO, ODBOCKA ST.C.) = 06
│     │  ├─ Read state from (R220, T202  L2, TRAFO, ODBOCKA ST.C.) = 06
│     │  └─ Read state from (R220, T202   Q, TRAFO, ODBOCKA ST.C.) = 06
│     ├─ AND <    >
│     │  ├─ Read state from (R220, T202  L3, TRAFO, ODBOCKA ST.C.) = 07
│     │  ├─ Read state from (R220, T202  L2, TRAFO, ODBOCKA ST.C.) = 07
│     │  └─ Read state from (R220, T202   Q, TRAFO, ODBOCKA ST.C.) = 07
│     ├─ AND <    >
│     │  ├─ Read state from (R220, T202  L3, TRAFO, ODBOCKA ST.C.) = 08
│     │  ├─ Read state from (R220, T202  L2, TRAFO, ODBOCKA ST.C.) = 08
│     │  └─ Read state from (R220, T202   Q, TRAFO, ODBOCKA ST.C.) = 08
```

Proprietary data, company confidential. All rights reserved.
Confidential and trade secret information. All rights reserved.
Comunicado como segredo empresarial. Reservados todos os direitos.
Comunicado como segredo industrial. Nos reservamos todos os direitos.
The reproduction, transmission or use of this document or its contents is not permitted without express written authority. Offenders will be liable for damages. All rights, including rights created by patent grant or registration of a utility model or design, are reserved.

Documentation structure: Standard
Source file: KO050722.ODA

				Date	22.07.2005	VSZ KOSICE	SIEMENS AG ISATOOLS	Substation control system 6MB Function for indication derivation	T = /BP 46
				Drawn	LANG				+
				Appr.					-S113 Page 46
Rev.	Remarks	Date	Name	Norm		Orig./Repl. 1/Repl. by		Table	

Name of function: TRAFOSTUFEN T202 Q,Y,Z

Cancel after first fulfilled rule: Yes
Application as: Bay-related
With information status processing: No

```
├─ AND <   >
│  ├─ Read state from (R220, T202  L3, TRAFO, ODBOCKA ST.C.) = 09
│  ├─ Read state from (R220, T202  L2, TRAFO, ODBOCKA ST.C.) = 09
│  └─ Read state from (R220, T202   Q, TRAFO, ODBOCKA ST.C.) = 09
├─ AND <   >
│  ├─ Read state from (R220, T202  L3, TRAFO, ODBOCKA ST.C.) = 10
│  ├─ Read state from (R220, T202  L2, TRAFO, ODBOCKA ST.C.) = 10
│  └─ Read state from (R220, T202   Q, TRAFO, ODBOCKA ST.C.) = 10
├─ AND <   >
│  ├─ Read state from (R220, T202  L3, TRAFO, ODBOCKA ST.C.) = 11
│  ├─ Read state from (R220, T202  L2, TRAFO, ODBOCKA ST.C.) = 11
│  └─ Read state from (R220, T202   Q, TRAFO, ODBOCKA ST.C.) = 11
├─ AND <   >
│  ├─ Read state from (R220, T202  L3, TRAFO, ODBOCKA ST.C.) = 12
│  ├─ Read state from (R220, T202  L2, TRAFO, ODBOCKA ST.C.) = 12
│  └─ Read state from (R220, T202   Q, TRAFO, ODBOCKA ST.C.) = 12
├─ AND <   >
│  ├─ Read state from (R220, T202  L3, TRAFO, ODBOCKA ST.C.) = 13
│  ├─ Read state from (R220, T202  L2, TRAFO, ODBOCKA ST.C.) = 13
│  └─ Read state from (R220, T202   Q, TRAFO, ODBOCKA ST.C.) = 13
├─ AND <   >
│  ├─ Read state from (R220, T202  L3, TRAFO, ODBOCKA ST.C.) = 14
│  ├─ Read state from (R220, T202  L2, TRAFO, ODBOCKA ST.C.) = 14
│  └─ Read state from (R220, T202   Q, TRAFO, ODBOCKA ST.C.) = 14
├─ AND <   >
│  ├─ Read state from (R220, T202  L3, TRAFO, ODBOCKA ST.C.) = 15
│  ├─ Read state from (R220, T202  L2, TRAFO, ODBOCKA ST.C.) = 15
│  └─ Read state from (R220, T202   Q, TRAFO, ODBOCKA ST.C.) = 15
├─ AND <   >
│  ├─ Read state from (R220, T202  L3, TRAFO, ODBOCKA ST.C.) = 16
│  ├─ Read state from (R220, T202  L2, TRAFO, ODBOCKA ST.C.) = 16
│  └─ Read state from (R220, T202   Q, TRAFO, ODBOCKA ST.C.) = 16
├─ AND <   >
│  ├─ Read state from (R220, T202  L3, TRAFO, ODBOCKA ST.C.) = 17
│  ├─ Read state from (R220, T202  L2, TRAFO, ODBOCKA ST.C.) = 17
```

Proprietary data, company confidential. All rights reserved.
Confie a titre de secret d'entreprise. Tous droits réservés.
Comunicado como segredo empresarial. Reservados todos os direitos.
Confiado como secreto industrial. Nos reservamos todos los derechos.
The reproduction, transmission or use of this document or its
is not permitted without express written authority.
Offenders will be liable for damages. All rights, including rights
created by patent grant or registration of a utility model or design, are reserved.

Documentation structur: Standard
Source file: KO050722.ODA

			Date	22.07.2005	VSZ KOSICE	SIEMENS AG ISA TOOLS	Substation control system 6MB Function for indication derivation
			Drawn	LANG			
			Appr.				
P	Remarks	Date	Name	Norm	Orig./Repl. 1/Repl. by		Table

T = /BP 47
+
-S113
Page 7

Name of function: TRAFOSTUFEN T202 Q,Y,Z

Cancel after first fulfilled rule: Yes
Application as: Bay-related
With information status processing: No

```
│   │   └─ Read state from (R220, T202   Q, TRAFO, ODBOCKA ST.C.) = 17
│   ├─ AND <   >
│   │   ├─ Read state from (R220, T202  L3, TRAFO, ODBOCKA ST.C.) = 18
│   │   ├─ Read state from (R220, T202  L2, TRAFO, ODBOCKA ST.C.) = 18
│   │   └─ Read state from (R220, T202   Q, TRAFO, ODBOCKA ST.C.) = 18
│   └─ AND <   >
│       ├─ Read state from (R220, T202  L3, TRAFO, ODBOCKA ST.C.) = 19
│       ├─ Read state from (R220, T202  L2, TRAFO, ODBOCKA ST.C.) = 19
│       └─ Read state from (R220, T202   Q, TRAFO, ODBOCKA ST.C.) = 19
├─ THEN <   >
│  └─ Derivation of an indication (R220, T202, PORUCHA PARAL.REG.) = KON
└─ ELSE <   >
   └─ Derivation of an indication (R220, T202, PORUCHA PARAL.REG.) = ZAC
```

Proprietary data, company confidential. All rights reserved
Confie a titre de secret d'entreprise. Tous droits réservés
Comunicado como segredo empresarial. Reservados todos os direitos.
Confiado como secreto industrial. Nos reservamos todos los derechos.
The reproduction, transmission or use of this document or its
is not permitted without express written authority.
Offenders will be liable for damages. All rights, including rights
created by patent grant or registration of a utility model or design, are reserved

Documentation structur: Standard
Source file: KO050722.ODA

Rev.	Remarks	Date	Name	Date	22.07.2005	VSZ KOSICE	SIEMENS AG ISAIOOLS	Substation control system 6MB Function for indication derivation	T = /BP 48
				Drawn	LANG				+
				Appr.					-S113 Page 48
				Norm		Orig./Repl. 1/Repl. by		Table	

Name of function: TRAFOSTUFEN T202 X,Y,Z

Cancel after first fulfilled rule: Yes
Application as: Bay-related
With information status processing: No

```
Function for indication derivation <TRAFOSTUFEN T202 X,Y,Z>
├─ IF <    >
│  └─ OR <    >
│     ├─ AND <    >
│     │  ├─ Read state from (R220, T202  L1, TRAFO, ODBOCKA ST.C.) = 01
│     │  ├─ Read state from (R220, T202  L2, TRAFO, ODBOCKA ST.C.) = 01
│     │  └─ Read state from (R220, T202  L3, TRAFO, ODBOCKA ST.C.) = 01
│     ├─ AND <    >
│     │  ├─ Read state from (R220, T202  L1, TRAFO, ODBOCKA ST.C.) = 02
│     │  ├─ Read state from (R220, T202  L3, TRAFO, ODBOCKA ST.C.) = 02
│     │  └─ Read state from (R220, T202  L2, TRAFO, ODBOCKA ST.C.) = 02
│     ├─ AND <    >
│     │  ├─ Read state from (R220, T202  L1, TRAFO, ODBOCKA ST.C.) = 03
│     │  ├─ Read state from (R220, T202  L3, TRAFO, ODBOCKA ST.C.) = 03
│     │  └─ Read state from (R220, T202  L2, TRAFO, ODBOCKA ST.C.) = 03
│     ├─ AND <    >
│     │  ├─ Read state from (R220, T202  L1, TRAFO, ODBOCKA ST.C.) = 04
│     │  ├─ Read state from (R220, T202  L3, TRAFO, ODBOCKA ST.C.) = 04
│     │  └─ Read state from (R220, T202  L2, TRAFO, ODBOCKA ST.C.) = 04
│     ├─ AND <    >
│     │  ├─ Read state from (R220, T202  L1, TRAFO, ODBOCKA ST.C.) = 05
│     │  ├─ Read state from (R220, T202  L3, TRAFO, ODBOCKA ST.C.) = 05
│     │  └─ Read state from (R220, T202  L2, TRAFO, ODBOCKA ST.C.) = 05
│     ├─ AND <    >
│     │  ├─ Read state from (R220, T202  L1, TRAFO, ODBOCKA ST.C.) = 06
│     │  ├─ Read state from (R220, T202  L3, TRAFO, ODBOCKA ST.C.) = 06
│     │  └─ Read state from (R220, T202  L2, TRAFO, ODBOCKA ST.C.) = 06
│     ├─ AND <    >
│     │  ├─ Read state from (R220, T202  L1, TRAFO, ODBOCKA ST.C.) = 07
│     │  ├─ Read state from (R220, T202  L3, TRAFO, ODBOCKA ST.C.) = 07
│     │  └─ Read state from (R220, T202  L2, TRAFO, ODBOCKA ST.C.) = 07
│     ├─ AND <    >
│     │  ├─ Read state from (R220, T202  L1, TRAFO, ODBOCKA ST.C.) = 08
│     │  ├─ Read state from (R220, T202  L3, TRAFO, ODBOCKA ST.C.) = 08
│     │  └─ Read state from (R220, T202  L2, TRAFO, ODBOCKA ST.C.) = 08
```

The reproduction, transmission or use of this document or its contents is not permitted without express written authority. Offenders will be liable for damages. All rights, including rights created by patent grant or registration of a utility model or design, are reserved. Proprietary data, company confidential. All rights reserved. Confia a titre de secret d'entreprise. Tous droits r,serv,s. Comunicado como segredo empresarial. Reservados todos os direitos. Confiado como secreto industrial. Nos reservamos todos los derechos.

Documentation structur: Standard
Source file: KO050722.ODA

			Date	22.07.2005	VSZ KOSICE	SIEMENS AG ISAOOLS	Substation control system 6MB Function for indication derivation	T = /BP 49	
			Drawn	LANG				+	
			Appr.					-S113	Page 49
F	Remarks	Date	Name Norm		Orig./Repl. 1/Repl. by		Table		

Name of function: TRAFOSTUFEN T202 X,Y,Z

Cancel after first fulfilled rule: Yes
Application as: Bay-related
With information status processing: No

```
├─ AND <    >
│  ├─ Read state from (R220, T202  L1, TRAFO, ODBOCKA ST.C.) = 09
│  ├─ Read state from (R220, T202  L3, TRAFO, ODBOCKA ST.C.) = 09
│  └─ Read state from (R220, T202  L2, TRAFO, ODBOCKA ST.C.) = 09
├─ AND <    >
│  ├─ Read state from (R220, T202  L1, TRAFO, ODBOCKA ST.C.) = 10
│  ├─ Read state from (R220, T202  L3, TRAFO, ODBOCKA ST.C.) = 10
│  └─ Read state from (R220, T202  L2, TRAFO, ODBOCKA ST.C.) = 10
├─ AND <    >
│  ├─ Read state from (R220, T202  L1, TRAFO, ODBOCKA ST.C.) = 11
│  ├─ Read state from (R220, T202  L3, TRAFO, ODBOCKA ST.C.) = 11
│  └─ Read state from (R220, T202  L2, TRAFO, ODBOCKA ST.C.) = 11
├─ AND <    >
│  ├─ Read state from (R220, T202  L1, TRAFO, ODBOCKA ST.C.) = 12
│  ├─ Read state from (R220, T202  L3, TRAFO, ODBOCKA ST.C.) = 12
│  └─ Read state from (R220, T202  L2, TRAFO, ODBOCKA ST.C.) = 12
├─ AND <    >
│  ├─ Read state from (R220, T202  L1, TRAFO, ODBOCKA ST.C.) = 13
│  ├─ Read state from (R220, T202  L3, TRAFO, ODBOCKA ST.C.) = 13
│  └─ Read state from (R220, T202  L2, TRAFO, ODBOCKA ST.C.) = 13
├─ AND <    >
│  ├─ Read state from (R220, T202  L1, TRAFO, ODBOCKA ST.C.) = 14
│  ├─ Read state from (R220, T202  L3, TRAFO, ODBOCKA ST.C.) = 14
│  └─ Read state from (R220, T202  L2, TRAFO, ODBOCKA ST.C.) = 14
├─ AND <    >
│  ├─ Read state from (R220, T202  L1, TRAFO, ODBOCKA ST.C.) = 15
│  ├─ Read state from (R220, T202  L3, TRAFO, ODBOCKA ST.C.) = 15
│  └─ Read state from (R220, T202  L2, TRAFO, ODBOCKA ST.C.) = 15
├─ AND <    >
│  ├─ Read state from (R220, T202  L1, TRAFO, ODBOCKA ST.C.) = 16
│  ├─ Read state from (R220, T202  L3, TRAFO, ODBOCKA ST.C.) = 16
│  └─ Read state from (R220, T202  L2, TRAFO, ODBOCKA ST.C.) = 16
├─ AND <    >
│  ├─ Read state from (R220, T202  L1, TRAFO, ODBOCKA ST.C.) = 17
│  ├─ Read state from (R220, T202  L3, TRAFO, ODBOCKA ST.C.) = 17
```

Proprietary data, company confidential. All rights reserved.
Confiance a titre de secret d'entreprise. Tous droits reservés.
Comunicado como segredo empresarial. Reservados todos os direitos.
Confiado como secreto industrial. Nos reservamos todos los derechos.
The reproduction, transmission or use of this document or its
is not permitted without express written authority.
Offenders will be liable for damages. All rights, including rights
created by patent grant or registration of a utility model or design, are reserved.

Documentation structur: Standard
Source file: KO050722.ODA

Name of function: TRAFOSTUFEN T202 X,Y,Z

Cancel after first fulfilled rule: Yes
Application as: Bay-related
With information status processing: No

```
│   │   └─ Read state from (R220, T202  L2, TRAFO, ODBOCKA ST.C.) = 17
│   ├─ AND <   >
│   │   ├─ Read state from (R220, T202  L1, TRAFO, ODBOCKA ST.C.) = 18
│   │   ├─ Read state from (R220, T202  L3, TRAFO, ODBOCKA ST.C.) = 18
│   │   └─ Read state from (R220, T202  L2, TRAFO, ODBOCKA ST.C.) = 18
│   └─ AND <   >
│       ├─ Read state from (R220, T202  L1, TRAFO, ODBOCKA ST.C.) = 19
│       ├─ Read state from (R220, T202  L3, TRAFO, ODBOCKA ST.C.) = 19
│       └─ Read state from (R220, T202  L2, TRAFO, ODBOCKA ST.C.) = 19
├─ THEN <   >
│  └─ Derivation of an indication (R220, T202, PORUCHA PARAL.REG.) = KON
└─ ELSE <   >
   └─ Derivation of an indication (R220, T202, PORUCHA PARAL.REG.) = ZAC
```

Proprietary data, company confidential. All rights reserved
Confia a titre de secret d'entreprise. Tous droits r.serv.s.
Comunicado como segredo empresarial. Reservados todos os direitos.
Confiado como secreto industrial. Nos reservamos todos los derechos.
The reproduction, transmission or use of this document or its contents is not permitted without express written authority. Offenders will be liable for damages. All rights, including rights created by patent grant or registration of a utility model or design, are reserved.

Documentation structur: Standard
Source file: KO050722.ODA

			Date	22.07.2005	VSZ KOSICE	SIEMENS AG ISATOOLS	Substation control system 6MB Function for indication derivation
			Drawn	LANG			
			Appr.				
Remarks	Date	Name	Norm		Orig./Repl. 1/Repl. by		Table

T = /BP 51
+
-S113
Page 51

Name of function: VERTEILER FÜR FELDMERKER UND STEUERBYTE

Cancel after first fulfilled rule: Yes
Application as: Bay-related
With information status processing: No

```
Function for indication derivation <VERTEILER FÜR FELDMERKER UND STEUERBYTE>
 ├─ IF <    >
 │   └─ Triggering directly with (Initiation information) = JA
 └─ THEN <    >
     └─ Call function of same type FELDMERKER FUER GAENDE VOM EAG ( Function for indication derivation )
```

Proprietary data, company confidential. All rights reserved.
Confia a tire de secret d'entreprise. Tous droits réservés.
Comunicado como segredo empresarial. Reservados todos os direitos.
Confiado como secreto industrial. Nos reservamos todos los derechos.
The reproduction, transmission or use of this document or its contents is not permitted without express written authority. Offenders will be liable for damages. All rights, including rights created by patent grant or registration of a utility model or design, are reserved.

Name of function: VERTEILER TRAFOSTUFEN T201

Cancel after first fulfilled rule: Yes
Application as: Bay-related
With information status processing: No

```
Function for indication derivation <VERTEILER TRAFOSTUFEN T201>
├─ IF <   >
│  └─ AND <   >
│     ├─ Read state from (R220, DA01, Q-JEDNOTKA NEZARADENA DO L1) = ZAC
│     ├─ Read state from (R220, DA01, Q-JEDNOTKA NEZARADENA DO L2) = ZAC
│     └─ Read state from (R220, DA01, Q-JEDNOTKA NEZARADENA DO L3) = ZAC
├─ THEN <   >
│  └─ Call function of same type TRAFOSTUFEN T201 X,Y,Z ( Function for indication derivation )
├─ ELSE_IF <   >
│  └─ AND <   >
│     ├─ Read state from (R220, DA01, Q-JEDNOTKA NEZARADENA DO L1) = ZAC
│     └─ Read state from (R220, DA01, Q-JEDNOTKA NEZARADENA DO L2) = ZAC
├─ THEN <   >
│  └─ Call function of same type TRAFOSTUFEN T201 Q,X,Y ( Function for indication derivation )
├─ ELSE_IF <   >
│  └─ AND <   >
│     ├─ Read state from (R220, DA01, Q-JEDNOTKA NEZARADENA DO L2) = ZAC
│     └─ Read state from (R220, DA01, Q-JEDNOTKA NEZARADENA DO L3) = ZAC
├─ THEN <   >
│  └─ Call function of same type TRAFOSTUFEN T201 Q,Y,Z ( Function for indication derivation )
├─ ELSE_IF <   >
│  └─ AND <   >
│     ├─ Read state from (R220, DA01, Q-JEDNOTKA NEZARADENA DO L1) = ZAC
│     └─ Read state from (R220, DA01, Q-JEDNOTKA NEZARADENA DO L3) = ZAC
└─ THEN <   >
   └─ Call function of same type TRAFOSTUFEN T201 Q,X,Z ( Function for indication derivation )
```

Proprietary data, company confidential. All rights reserved.
Confie a titre de secret d'entreprise. Tous droits reservés.
Comunicado como segredo empresarial. Reservados todos os direitos.
Confiado como secreto industrial. Nos reservamos todos los derechos.

The reproduction, transmission or use of this document or its is not permitted without express written authority.
Offenders will be liable for damages. All rights, including rights created by patent grant or registration of a utility model or design, are reserved.

Documentation structur: Standard
Source file: KO050722.ODA

			Date	22.07.2005	VSZ KOSICE	SIEMENS AG ISA TOOLS	Substation control system 6MB Function for indication derivation	T = /BP 53	
			Drawn	LANG				+	
			Appr.						
R	Remarks	Date	Name	Norm	Orig./Repl. 1/Repl. by		Table	-S113	Page

Name of function: VERTEILER TRAFOSTUFEN T202

Cancel after first fulfilled rule: Yes
Application as: Bay-related
With information status processing: No

```
Function for indication derivation <VERTEILER TRAFOSTUFEN T202>
 ├─ IF <    >
 │   └─ AND <    >
 │       ├─ Read state from (R220, DA02, Q-JEDNOTKA NEZARADENA DO L1) = ZAC
 │       ├─ Read state from (R220, DA02, Q-JEDNOTKA NEZARADENA DO L2) = ZAC
 │       └─ Read state from (R220, DA02, Q-JEDNOTKA NEZARADENA DO L3) = ZAC
 ├─ THEN <    >
 │   └─ Call function of same type TRAFOSTUFEN T202 X,Y,Z ( Function for indication derivation )
 ├─ ELSE_IF <    >
 │   └─ AND <    >
 │       ├─ Read state from (R220, DA02, Q-JEDNOTKA NEZARADENA DO L1) = ZAC
 │       └─ Read state from (R220, DA02, Q-JEDNOTKA NEZARADENA DO L2) = ZAC
 ├─ THEN <    >
 │   └─ Call function of same type TRAFOSTUFEN T202 Q,X,Y ( Function for indication derivation )
 ├─ ELSE_IF <    >
 │   └─ AND <    >
 │       ├─ Read state from (R220, DA02, Q-JEDNOTKA NEZARADENA DO L2) = ZAC
 │       └─ Read state from (R220, DA02, Q-JEDNOTKA NEZARADENA DO L3) = ZAC
 ├─ THEN <    >
 │   └─ Call function of same type TRAFOSTUFEN T202 Q,Y,Z ( Function for indication derivation )
 ├─ ELSE_IF <    >
 │   └─ AND <    >
 │       ├─ Read state from (R220, DA02, Q-JEDNOTKA NEZARADENA DO L1) = ZAC
 │       └─ Read state from (R220, DA02, Q-JEDNOTKA NEZARADENA DO L3) = ZAC
 └─ THEN <    >
     └─ Call function of same type TRAFOSTUFEN T202 Q,X,Z ( Function for indication derivation )
```

Proprietary data, company confidential. All rights reserved.
Confia a titre de secret d'entreprise. Tous droits réservés.
Comunicado como segredo empresarial. Reservados todos os direitos.
Confiado como secreto industrial. Nos reservamos todos los derechos.
The reproduction, transmission or use of this document or its contents is not permitted without express written authority. Offenders will be liable for damages. All rights, including rights created by patent grant or registration of a utility model or design, are reserved.

Name of function: Ztrata ss.-signal napeti

Cancel after first fulfilled rule: Yes
Application as: Bay-related
With information status processing: No

```
Function for indication derivation <Ztrata ss.-signal napeti>
├─ IF <    >
│  └─ AND <    >
│     ├─ State of the calling indication = ZAC
│     └─ Read state from (    , Ztrata ss.- signal.napeti, from same area)= ZAC
├─ THEN <    >
│  └─ Derivation of an indication (    , Ztrata ss.- signal.napeti, from same area)= KON
├─ ELSE_IF <    >
│  └─ AND <    >
│     ├─ Read state from (    , Ztrata ss.- signal.napeti inv, from same area)= KON
│     └─ Read state from (    , Ztrata ss.- signal.napeti, from same area)= KON
└─ THEN <    >
   └─ Derivation of an indication (    , Ztrata ss.- signal.napeti, from same area)= ZAC
```

Proprietary data, company confidential. All rights reserved.
Confie a titre de secret d'entreprise. Tous droits reserv,s.
Comunicado como segredo empresarial. Reservados todos os direitos.
Confiado como secreto industrial. Nos reservamos todos los derechos.

The reproduction, transmission or use of this document or its is not permitted without express written authority.
Offenders will be liable for damages. All rights, including rights created by patent grant or registration of a utility model or design, are reserved

Documentation structur: Standard
Source file: KO050722.ODA

			Date	22.07.2005	VSZ KOSICE	SIEMENS AG SAOOLS	Substation control system 6MB Function for indication derivation	T = /BP 55
			Drawn	LANG				+
			Appr.					-S113 Page
R	Remarks	Date	Name Norm		Orig./Repl. 1/Repl. by		Table	

Name of function: MB 1 - Erfassungsbearbeitung EAG
Allocated function group: Meldungsbearbeitung für EAG's

Cancel after first fulfilled rule: Yes
Function application: Normal acquisition processing

```
Function for indication processing <MB 1 - Erfassungsbearbeitung EAG>
├─ IF <W1 (MB 1 EAG) - Abfrage Infoart>
│   └─ Information type of the calling indication = WISCHER
├─ THEN <D1 (MB 1 EAG) - Wischer>
│   └─ Enable = JA
└─ ELSE <D2 (MB 1 EAG) - Rest>
    └─ Enable = JA
```

Proprietary data, company confidential. All rights reserved.
Confie a titre de secret d'entreprise. Tous droits reservés.
Comunicado como segredo empresarial. Reservados todos os direitos.
Confiado como secreto industrial. Nos reservamos todos los derechos.
The reproduction, transmission or use of this document or its
is not permitted without express written authority.
Offenders will be liable for damages. All rights, including rights
created by patent grant or registration of a utility model or design, are reserved.

Documentation structur: Standard
Source file: KO050722.ODA

Rev.	Remarks	Date	Name	Date	22.07.2005	VSZ KOSICE	SIEMENS AG ISA TOOLS	Substation control system 6MB Function for indication processing	T = /BP 56
				Drawn	LANG				+
				Appr.					
				Norm		Orig./Repl. 1/Repl. by		Table	-S113 Page 56

Name of function: MB 1 - Erfassungsbearbeitung LZG
Allocated function group: Meldungsbearbeitung fürs LZG

Cancel after first fulfilled rule: Yes
Function application: Normal acquisition processing

```
Function for indication processing <MB 1 - Erfassungsbearbeitung LZG>
├─ IF <W (MB 1 LZG) - Abfrage Infoart>
│   └─ Information type of the calling indication = WISCHER
├─ THEN <D1 (MB 1 LZG) - Wischer>
│   └─ Enable = JA
└─ ELSE <D2 (MB 1 LZG) - Rest>
    └─ Read from PI table from (Initiation information) = JA
```

Proprietary data, company confidential. All rights reserved.
Confie a titre de secret d'entreprise. Tous droits r,serv,s.
Comunicado como segredo empresarial. Reservados todos os direitos.
Confiado como secreto industrial. Nos reservamos todos los derechos.
The reproduction, transmission or use of this document or its is not permitted without express written authority.
Offenders will be liable for damages. All rights, including rights created by patent grant or registration of a utility model or design, are reserved.

Documentation structur: Standard
Source file: KO050722.ODA

			Date	22.07.2005	VSZ KOSICE	SIEMENS AG ISA TOOLS	Substation control system 6MB Function for indication processing
			Drawn	LANG			
			Appr.				
Rev	Remarks	Date	Name	Norm	Orig./Repl. 1/Repl. by		Table

T = /BP 57
+
-S113
Page 57

Name of function: MB 2 - Feldsperrenbearbeitung EAG
Allocated function group: Meldungsbearbeitung für EAG's

Cancel after first fulfilled rule: Yes
Function application: With bay disable scan

```
Function for indication processing <MB 2 - Feldsperrenbearbeitung EAG>
├─ IF <W1 (MB 1 EAG) - Abfrage Infoart>
│  └─ AND <und 1>
│     ├─ Information type of the calling indication = WISCHER
│     └─ Read state from (    , ZABLOKOVANI POLE, from same area)= KON
├─ THEN <D1 (MB 1 EAG) - Wischer>
│  └─ Enable = JA
├─ ELSE_IF <W2>
│  └─ Read state from (    , ZABLOKOVANI POLE, from same area)= KON
└─ THEN <DANN 2>
   └─ Enable = JA
```

The reproduction, transmission or use of this document or its contents is not permitted without express written authority. Offenders will be liable for damages. All rights, including rights created by patent grant or registration of a utility model or design, are reserved.
Proprietary data, company confidential. All rights reserved. Confie a titre de secret d'entreprise. Tous droits réservés. Comunicado como segredo empresarial. Reservados todos os direitos. Confiado como secreto industrial. Nos reservamos todos los derechos.

Documentation structur: Standard
Source file: KO050722.ODA

Rev.	Remarks	Date	Name	Date	22.07.2005	VSZ KOSICE	SIEMENS AG ISAOOLS	Substation control system 6MB Function for indication processing	T = /BP 58
				Drawn	LANG				+
				Appr.					-S113 Page 58
				Norm		Orig./Repl. 1/Repl. by		Table	

Name of function: MB 2 - Feldsperrenbearbeitung LZG
Allocated function group: Meldungsbearbeitung fürs LZG

Cancel after first fulfilled rule: Yes
Function application: Normal acquisition processing

```
Function for indication processing <MB 2 - Feldsperrenbearbeitung LZG>
├─ IF <W (MB 1 EAG) - Abfrage Infoart>
│   └─ Information type of the calling indication = WISCHER
├─ THEN <D1 (MB 1 EAG) - Wischer>
│   └─ Enable = JA
└─ ELSE <    >
    └─ Enable = JA
```

Proprietary data, company confidential. All rights reserved
Confie a titre de secret d'entreprise. Tous droits réservés.
Comunicado como segredo empresarial. Reservados todos os direitos.
Confiado como secreto industrial. Nos reservamos todos los derechos.

The reproduction, transmission or use of this document or its
is not permitted without express written authority.
Offenders will be liable for damages. All rights, including rights
created by patent grant or registration of a utility model or design, are reserved

Documentation structur: Standard
Source file: KO050722.ODA

			Date	22.07.2005	VSZ	SIEMENS AG	Substation control system 6MB	T	= /BP 59
			Drawn	LANG	KOSICE	ISA TOOLS	Function for indication processing		+
			Appr.						
F	Remarks	Date	Name	Norm	Orig./Repl. 1/Repl. by		Table	-S113	Page 59

Name of function: FERNWIRKSPERRE

Cancel after first fulfilled rule: Yes
Application as: Higher-level
With information status processing: No

```
Function for special processing <FERNWIRKSPERRE>
├─ IF <W1 FERNWIRKSPERRE EIN>
│   └─ Read state from (    , FERNWIRKSPERRE, from same area)= zap.
└─ THEN <D1 KEIN VERTEILEN NACH FERN>
    └─ Distribute to LK for telecontrol = NEIN
```

The reproduction, transmission or use of this document or its contents is not permitted without express written authority. Offenders will be liable for damages. All rights, including rights created by patent grant or registration of a utility model or design, are reserved.
Proprietary data, company confidential. All rights reserved. Confiance a titre de secret d'entreprise. Tous droits réservés. Comunicado como segredo empresarial. Reservados todos os direitos. Confiado como secreto industrial. Nos reservamos todos los derechos.

Documentation structur: Standard
Source file: KO050722.ODA

Rev.	Remarks	Date	Name	Date	22.07.2005	VSZ KOSICE	SIEMENS AG ISA TOOLS	Substation control system 6MB Function for special processing	T = /BP 60
				Drawn	LANG				+
				Appr.					-S113 Page 60
				Norm		Orig./Repl. 1/Repl. by		Table	

Name of function: GA NACH FELDSPERRE AUS

Cancel after first fulfilled rule: Yes
Application as: Bay-related
With information status processing: No

```
Function for special processing <GA NACH FELDSPERRE AUS>
├─ IF <W1 GA NACH FELDSPERRE AUS>
│   └─ AND <W1 U1 FELDSPERRE AUS UND MELD. SPN>
│       ├─ State of the calling indication = KON
│       └─ Cause of calling indication = SPN
└─ THEN <D1 EAG ANSTOSSEN>
    └─ Start GI for I/O unit from (Initiation information) = JA
```

Proprietary data, company confidential. All rights reserved.
Confie a titre de secret d'entreprise. Tous droits réservés.
Comunicado como segredo empresarial. Reservados todos os direitos.
Confiado como secreto industrial. Nos reservamos todos los derechos.
The reproduction, transmission or use of this document or its
is not permitted without express written authority.
Offenders will be liable for damages. All rights, including rights
created by patent grant or registration of a utility model or design, are reserved.

Documentation structur: Standard
Source file: KO050722.ODA

			Date	22.07.2005	VSZ	SIEMENS AG	Substation control system 6MB	T	= /BP 61
			Drawn	LANG	KOSICE	ISA TOOLS	Function for special processing		+
			Appr.						
F	Remarks	Date	Name	Norm	Orig./Repl. 1/Repl. by		Table	-S113	Page 61

Name of function: SYNCHRO ABBRUCH

Cancel after first fulfilled rule: Yes
Application as: Bay-related
With information status processing: No

```
Function for special processing <SYNCHRO ABBRUCH>
├─ IF <    >
│   └─ Cause of calling indication = AB+
└─ THEN <    >
    └─ Derivation of an indication (    , SYNCHRO ABBRUCH, from same area)= ZAC
```

Proprietary data, company confidential. All rights reserved
Confie a titre de secret d'entreprise. Tous droits réservés.
Comunicado como segredo empresarial. Reservados todos os direitos.
Confiado como secreto industrial. Nos reservamos todos los derechos.
The reproduction, transmission or use of this document or its
is not permitted without express written authority.
Offenders will be liable for damages. All rights, including rights
created by patent grant or registration of a utility model or design, are reserved

Documentation structur: Standard
Source file: KO050722.ODA

Rev.	Remarks	Date	Name	Date	22.07.2005	VSZ KOSICE	SIEMENS AG ISA TOOLS	Substation control system 6MB Function for special processing	T = /BP 62
				Drawn	LANG				+
				Appr.					
				Norm		Orig./Repl. 1/Repl. by		Table	-S113 Page 62

Name of function: TR BEI MELDUNG=NAK NICHT AN LISTE

Cancel after first fulfilled rule: Yes
Application as: Higher-level
With information status processing: No

```
Function for special processing <TR BEI MELDUNG=NAK NICHT AN LISTE>
├─ IF <    >
│   └─ State of the calling indication = NAK
└─ THEN <    >
    └─ Distribute to display of lists = NEIN
```

The reproduction, transmission or use of this document or its contents is not permitted without express written authority. Offenders will be liable for damages. All rights, including rights created by patent grant or registration of a utility model or design, are reserved. Proprietary data, company confidential. All rights reserved. Confie a titre de secret d'entreprise. Tous droits réservés. Comunicado como segredo empresarial. Reservados todos os direitos. Confiado como secreto industrial. Nos reservamos todos los derechos.

Documentation structur: Standard
Source file: KO050722.ODA

			Date	22.07.2005	VSZ KOSICE	SIEMENS AG ISA TOOLS	Substation control system 6MB Function for special processing	T = /BP 63
			Drawn	LANG				+
			Appr.					-S113 Page 63
F	Remarks	Date	Name Norm		Orig./Repl. 1/Repl. by		Table	

Name of function: TR BEI SOLL=IST NICHT AN LISTE

Cancel after first fulfilled rule: Yes
Application as: Bay-related
With information status processing: No

```
Function for special processing <TR BEI SOLL=IST NICHT AN LISTE>
├─ IF <    >
│   └─ AND <    >
│       ├─ State of the calling indication = KON
│       └─ Read state from (Initiation information) = KON
├─ THEN <    >
│   └─ Distribute to display of lists = NEIN
├─ ELSE_IF <    >
│   └─ AND <    >
│       ├─ State of the calling indication = ZAC
│       └─ Read state from (Initiation information) = ZAC
└─ THEN <    >
    └─ Distribute to display of lists = NEIN
```

The reproduction, transmission or use of this document or its is not permitted without express written authority. Offenders will be liable for damages. All rights, including rights created by patent grant or registration of a utility model or design, are reserved. Proprietary data, company confidential. All rights reserved. Confie a titre de secret d'entreprise. Tous droits r,serv,s. Comunicado como segredo empresarial. Reservados todos os direitos. Confiado como secreto industrial. Nos reservamos todos los derechos.

Documentation structur: Standard
Source file: KO050722.ODA

Rev.	Remarks	Date	Name	Date	22.07.2005	VSZ KOSICE	SIEMENS AG ISA TOOLS	Substation control system 6MB Function for special processing	T = /BP 64
				Drawn	LANG				+
				Appr.					-S113 Page 64
				Norm		Orig./Repl. 1/Repl. by		Table	

Name of function: TR QUITTUNG AN TRAFOREGLER

Cancel after first fulfilled rule: Yes
Application as: Bay-related
With information status processing: No

```
Function for special processing <TR QUITTUNG AN TRAFOREGLER>
├─ IF <    >
│  └─ OR <    >
│     ├─ Read cause = ZHL+
│     └─ Read cause = ZHL-
└─ THEN <    >
   └─ Start operating sequence with (REGUAL, KVIT, from same area)= Sf. TR Quittung
```

Proprietary data, company confidential. All rights reserved.
Confia a tire da secret d'entreprise. Tous droits r serv s.
Comunicado como segredo empresarial. Reservados todos os direitos.
Confiado como secreto industrial. Nos reservamos todos los derechos.
The reproduction, transmission or use of this document or its
is not permitted without expres written authority.
Offenders will be liable for damages. All rights, including rights
created by patent grant or registration of a utility model or design, are reserved.

Documentation structur: Standard
Source file: KO050722.ODA

			Date	22.07.2005	VSZ KOSICE	SIEMENS AG ISATOOLS	Substation control system 6MB Function for special processing
			Drawn	LANG			
			Appr.				
P	Remarks	Date	Name	Norm	Orig./Repl. 1/Repl. by		Table

T = /BP 65
+
-S113
Page 65

Name of function: TR QUITTUNG BEI UMSCHALTUNG AUF AUTO

Cancel after first fulfilled rule: Yes
Application as: Bay-related
With information status processing: No

```
Function for special processing <TR QUITTUNG BEI UMSCHALTUNG AUF AUTO>
├─ IF <    >
│   └─ State of the calling indication = AUTO
└─ THEN <    >
    └─ Start operating sequence with (REGUAL, KVIT, from same area)= Sf. TR Quittung
```

Proprietary data, company confidential. All rights reserved.
Confia a titre de secret d'entreprise. Tous droits r,serv,s.
Comunicado como segredo empresarial. Reservados todos os direitos.
Confiado como secreto industrial. Nos reservamos todos los derechos.
The reproduction, transmission or use of this document or its
is not permitted without expres written authority.
Offenders will be liable for damages. All rights, including rights
created by patent grant or registration of a utility model or design, are reserved

Documentation structur: Standard
Source file: KO050722.ODA

Rev.	Remarks	Date	Name	Date	22.07.2005	VSZ KOSICE	SIEMENS AG ISA TOOLS	Substation control system 6MB Function for special processing	T = /BP 66
				Drawn	LANG				+
				Appr.					
				Norm		Orig./Repl. 1/Repl. by		Table	-S113 Page 66

Name of function: VERTEILER FÜR FWS UND SYNCHRO ABBRUCH

Cancel after first fulfilled rule: Yes
Application as: Bay-related
With information status processing: No

```
Function for special processing <VERTEILER FÜR FWS UND SYNCHRO ABBRUCH>
├─ IF <    >
│   └─ Triggering directly with (Initiation information) = JA
└─ THEN <    >
    ├─ Call function of same type SYNCHRO ABBRUCH ( Function for special processing )
    └─ Call function of same type FERNWIRKSPERRE ( Function for special processing )
```

Proprietary data, company confidential. All rights reserved.
Confie a tifre de secret d'entreprise. Tous droits r,serv,s.
Comunicado como segredo empresarial. Reservados todos os direitos.
Confiado como secreto industrial. Nos reservamos todos los derechos.
The reproduction, transmission or use of this document or its is not permitted without express written authority.
Offenders will be liable for damages. All rights, including rights created by patent grant or registration of a utility model or design, are reserved

Documentation structur: Standard
Source file: KO050722.ODA

			Date	22.07.2005	VSZ KOSICE	SIEMENS AG ISA TOOLS	Substation control system 6MB Function for special processing	T = /BP 67
			Drawn	LANG				+
			Appr.					-S113 Page 67
F	Remarks	Date	Name Norm		Orig./Repl. 1/Repl. by		Table	

Name of function: VERTEILER FÜR SOLL=IST, QUITT & NAK

Cancel after first fulfilled rule: Yes
Application as: Bay-related
With information status processing: No

```
Function for special processing <VERTEILER FÜR SOLL=IST, QUITT & NAK>
├─ IF <    >
│   └─ Triggering directly with (Initiation information) = JA
└─ THEN <    >
    ├─ Call function of same type TR BEI SOLL=IST NICHT AN LISTE ( Function for special processing )
    ├─ Call function of same type TR QUITTUNG BEI UMSCHALTUNG AUF AUTO ( Function for special processing )
    └─ Call function of same type TR BEI MELDUNG=NAK NICHT AN LISTE ( Function for special processing )
```

Proprietary data, company confidential. All rights reserved.
Confie a titre de secret d'entreprise. Tous droits reservés.
Comunicado como segredo empresarial. Reservados todos os direitos.
Confiado como secreto industrial. Nos reservamos todos los derechos.
The reproduction, transmission or use of this document or its is not permitted without express written authority.
Offenders will be liable for damages. All rights, including rights created by patent grant or registration of a utility model or design, are reserved.

Documentation structur: Standard
Source file: KO050722.ODA

Rev.	Remarks	Date	Name	Date	22.07.2005	VSZ KOSICE	SIEMENS AG ISA TOOLS	Substation control system 6MB Function for special processing	T = /BP 68
				Drawn	LANG				+
				Appr.					
				Norm		Orig./Repl. 1/Repl. by		Table	-S113 Page 68

Name of function: Nachgebildete Frequenz 1

Cancel after first fulfilled rule: Yes
Application as: Bay-related
With information status processing: No

```
Function for voltage simulation <Nachgebildete Frequenz 1>
├─ IF <    >
│   └─ Triggering directly with (Initiation information) = JA
└─ THEN <    >
    └─ Voltage simulation UW KOSICE\R110\EA05\SYCHR. FREKV. 1 = UW KOSICE\R110\EA05\MESSWERTE SPANNUNG\Nachgebildet Frek 1
```

Proprietary data, company confidential. All rights reserved.
Confie a titre de secret d'entreprise. Tous droits réservés.
Comunicado como segredo empresarial. Reservados todos os direitos.
Confiado como secreto industrial. Nos reservamos todos los derechos.
The reproduction, transmission or use of this document or its
is not permitted without express written authority.
Offenders will be liable for damages. All rights, including rights
created by patent grant or registration of a utility model or design, are reserved

Documentation structur: Standard
Source file: KO050722.ODA

			Date	22.07.2005	VSZ KOSICE	SIEMENS AG ISA TOOLS	Substation control system 6MB Function for voltage simulation	T = /BP 69
			Drawn	LANG				+
			Appr.					-S113 Page 69
F	Remarks	Date	Name Norm		Orig./Repl. 1/Repl. by		Table	

Name of function: Nachgebildete Frequenz 2

Cancel after first fulfilled rule: Yes
Application as: Bay-related
With information status processing: No

```
Function for voltage simulation <Nachgebildete Frequenz 2>
├─ IF <    >
│   └─ Triggering directly with (Initiation information) = JA
└─ THEN <    >
    └─ Voltage simulation UW KOSICE\R110\EA05\SYCHR. FREKV. 2 = UW KOSICE\R110\EA05\MESSWERTE SPANNUNG\Nachgebildet Frek 2
```

Proprietary data, company confidential. All rights reserved
Confie a titre de secret d'entreprise. Tous droits réservés.
Comunicado como segredo empresarial. Reservados todos os direitos.
Confiado como secreto industrial. Nos reservamos todos los derechos.
The reproduction, transmission or use of this document or its
is not permitted without express written authority.
Offenders will be liable for damages. All rights, including rights
created by patent grant or registration of a utility model or design, are reserved

Documentation structur: Standard
Source file: K0050722.ODA

				Date	22.07.2005	VSZ KOSICE	SIEMENS AG ISATOOLS	Substation control system 6MB	T = /BP 70
				Drawn	LANG			Function for voltage simulation	+
				Appr.					-S113 Page 70
Rev.	Remarks	Date	Name	Norm		Orig./Repl. 1/Repl. by		Table	

Name of function: Nachgebildete Spannung Feld 5

Cancel after first fulfilled rule: Yes
Application as: Bay-related
With information status processing: No

```
Function for voltage simulation <Nachgebildete Spannung Feld 5>
├─ IF <    >
│   └─ Triggering directly with (Initiation information) = JA
└─ THEN <    >
    └─ Voltage simulation UW KOSICE\R110\EA05\SYNCHR. ROZDIEL NAPAT = UW KOSICE\R110\EA05\MESSWERTE SPANNUNG\Nachgebildet
       Spannung
```

The reproduction, transmission or use of this document or its is not permitted without express written authority. Offenders will be liable for damages. All rights, including rights created by patent grant or registration of a utility model or design, are reserved
Proprietary data, company confidential. All rights reserved. Confie a tire de secret d'entreprise. Tous droits reservs. Comunicado como segredo empresarial. Reservados todos os direitos. Confiado como secreto industrial. Nos reservamos todos los derechos.

Documentation structur: Standard
Source file: KO050722.ODA

			Date	22.07.2005	VSZ KOSICE	SIEMENS AG ISA TOOLS	Substation control system 6MB Function for voltage simulation	T = /BP 71	
			Drawn	LANG				+	
			Appr.						
R	Remarks	Date	Name	Norm	Orig./Repl. 1/Repl. by		Table	-S113	Page

Name of function: Nachgebildete Winkel Feld 5

Cancel after first fulfilled rule: Yes
Application as: Bay-related
With information status processing: No

```
Function for voltage simulation <Nachgebildete Winkel Feld 5>
├─ IF <    >
│  └─ Triggering directly with (Initiation information) = JA
└─ THEN <    >
   └─ Voltage simulation UW KOSICE\R110\EA05\SYNCHR. ROZDIEL UHOL = UW KOSICE\R110\EA05\MESSWERTE SPANNUNG\Nachgebildet
      Winkel
```

Proprietary data, company confidential. All rights reserved
Confie a tire de secret d'entreprise. Tous droits reservis
Comunicado como segredo empressarial. Reservados todos os direitos.
Confiado como secreto industrial. Nos reservamos todos los derechos.
The reproduction, transmission or use of this document or its
is not permitted without expres written authority.
Offenders will be liable for damages. All rights, including rights
created by patent grant or registration of a utility model or design, are reserved

Name of function: Verteiler Frek1,2,Winkel,Spannung

Cancel after first fulfilled rule: Yes
Application as: Bay-related
With information status processing: No

```
Function for voltage simulation <Verteiler Frek1,2,Winkel,Spannung>
├─ IF <   >
│  └─ Triggering directly with (Initiation information) = JA
└─ THEN <   >
   ├─ Call function of same type Nachgebildete Frequenz 1 ( Function for voltage simulation )
   ├─ Call function of same type Nachgebildete Frequenz 2 ( Function for voltage simulation )
   ├─ Call function of same type Nachgebildete Spannung Feld 5 ( Function for voltage simulation )
   └─ Call function of same type Nachgebildete Winkel Feld 5 ( Function for voltage simulation )
```

Proprietary data, company confidential. All rights reserved.
Confia a ltre de secret d'entreprise. Tous droits reservs.
Comunicado como segredo empresarial. Reservados todos os direitos
Confiado como secreto industrial. Nos reservamos todos los derechos.
The reproduction, transmission or use of this document or its
is not permitted without expres written authority.
Offenders will be liable for damages. All rights, including rights
created by patent grant or registration of a utility model or design, are reserved.

Name of function: UV 1 Übergeordnete Verriegelung

Cancel after first fulfilled rule: Yes
Start function: Yes

```
Function for higher-level interlocking <UV 1 Übergeordnete Verriegelung>
├─ IF <UV 1 W1 Keine>
│  └─ Higher-level interlock type = KEINE VERRIEGELUNG
├─ THEN <UV 1 D1 Freigabe>
│  └─ Enable control = JA
├─ ELSE_IF <UV 1 W3>
│  └─ AND <Schaltgerät>
│     ├─ Higher-level interlock type = SCHALTGERÄT
│     ├─ OR <Steuern>
│     │  ├─ AND <Steuern von Nah>
│     │  │  ├─ Event source of control event = M
│     │  │  └─ State change from (Initiation information) = QUITTIERT
│     │  └─ Event source of control event = A
│     ├─ Read state from (    , GA-ENDE-MARKIERUNG, from the area of the acquisition unit) = ZAC
│     ├─ Control event running for (Initiation information) = NEIN
│     └─ Read state from (    , ZABLOKOVANI POLE, from same area)= KON
├─ THEN <UV 1 D3 Freigabe>
│  └─ Enable control = JA
├─ ELSE_IF <UV1 W5 NOT-AUS>
│  └─ AND <UV 1 W5 U1 NOT-AUS>
│     ├─ Higher-level interlock type = NOT-AUS
│     ├─ Read state from (    , GA-ENDE-MARKIERUNG, from the area of the acquisition unit) = ZAC
│     └─ Control event running for (Initiation information) = NEIN
├─ THEN <UV1 D5 FREIGABE>
│  └─ Enable control = JA
├─ ELSE_IF <UV1 W6 NAH ODER FERN ODER AUTO>
│  └─ AND <NAH/FERN/AUTO>
│     ├─ Higher-level interlock type = NAH ODER FERN ODER AUTO
│     └─ OR <NAH/FERN/AUTO>
│        ├─ AND <NAH>
│        │  ├─ Event source of control event = M
│        │  └─ Read state from (ROZVODNA, RIZENI RD/MISTNE) = MISTNE
│        ├─ AND <FERN>
│        │  ├─ Event source of control event = RD
│        │  └─ Read state from (ROZVODNA, RIZENI RD/MISTNE) = RD
```

Proprietary data, company confidential. All rights reserved.
Confie a titre de secret d'entreprise. Tous droits reservés.
Comunicado como segredo empresarial. Reservados todos os direitos.
Confiado como secreto industrial. Nos reservamos todos los derechos.

The reproduction, transmission or use of this document or its is not permitted without express written authority.
Offenders will be liable for damages. All rights, including rights created by patent grant or registration of a utility model or design, are reserved.

Documentation structur: Standard
Source file: KO050722.ODA

Rev.	Remarks	Date	Name	Date	22.07.2005	VSZ KOSICE	SIEMENS AG ISA TOOLS	Substation control system 6MB Function for higher-level interlocking	T = /BQ 1
				Drawn	LANG				+
				Appr.					-S114 Page 1
				Norm		Orig./Repl. 1/Repl. by		Table	

Name of function: UV 1 Übergeordnete Verriegelung

Cancel after first fulfilled rule: Yes
Start function: Yes

```
│        └─ Event source of control event = A
├─ THEN <UV1 D6 FREIGABE>
│  └─ Enable control = JA
├─ ELSE_IF <UV1 W7 REGLER>
│  └─ AND <REGLER>
│     ├─ Higher-level interlock type = REGLER
│     ├─ OR <NAH/FERN/AUTO>
│     │  ├─ AND <NAH>
│     │  │  ├─ Event source of control event = M
│     │  │  ├─ State change from (Initiation information) = QUITTIERT
│     │  │  └─ Read state from (ROZVODNA, RIZENI RD/MISTNE) = MISTNE
│     │  ├─ AND <FERN>
│     │  │  ├─ Event source of control event = RD
│     │  │  └─ Read state from (ROZVODNA, RIZENI RD/MISTNE) = RD
│     │  └─ Event source of control event = A
│     ├─ Read state from (    , GA-ENDE-MARKIERUNG, from the area of the acquisition unit) = ZAC
│     └─ Control event running for (Initiation information) = NEIN
├─ THEN <UV1 D7 FREIGABE>
│  └─ Enable control = JA
├─ ELSE_IF <UV1 W9 LIVEKONTAKT>
│  └─ AND <UV1 U9>
│     ├─ Higher-level interlock type = LIVEKONTAKT
│     └─ Read state from (    , GA-ENDE-MARKIERUNG, from the area of the acquisition unit) = ZAC
└─ THEN <UV1 D9>
   └─ Enable control = JA
```

The reproduction, transmission or use of this document or its contents is not permitted without express written authority. Offenders will be liable for damages. All rights, including rights created by patent grant or registration of a utility model or design, are reserved. Proprietary data, company confidential. All rights reserved. Confie a titre de secret d'entreprise. Tous droits réservés. Comunicado como segredo empresarial. Reservados todos os direitos. Confiado como secreto industrial. Nos reservamos todos los derechos.

Documentation structur: Standard
Source file: KO050722.ODA

			Date	22.07.2005	VSZ KOSICE	SIEMENS AG ISA TOOLS	Substation control system 6MB Function for higher-level interlocking	T = /BQ 2
			Drawn	LANG				+
			Appr.					-S114 Page 2
F	Remarks	Date	Name Norm		Orig./Repl. 1/Repl. by		Table	

Name of function: SY Sprungfunktion

Cancel after first fulfilled rule: Yes

```
Function for operating sequence jump step <SY Sprungfunktion>
├─ IF <    >
│   └─ OR <    >
│       ├─ Call reason for jump step = ABBRUCH DURCH BEDIENUNG
│       └─ Call reason for jump step = BEFUND BEI AUSFÜHRUNG
├─ THEN <    >
│   └─ Jump condition fulfilled = JA
├─ ELSE_IF <    >
│   └─ OR <    >
│       ├─ Call reason for jump step = SCHRITT-VERRIEGELUNG
│       └─ Call reason for jump step = VORGANGSVERRIEGELUNG
└─ THEN <    >
    └─ Jump condition fulfilled = NEIN
```

The reproduction, transmission or use of this document or its is not permitted without express written authority. Offenders will be liable for damages. All rights, including rights created by patent grant or registration of a utility model or design, are reserved. Proprietary data, company confidential. All rights reserved. Confie a titre de secret d'entreprise. Tous droits réservés. Comunicado como segredo empresarial. Reservados todos os direitos. Confiado como secreto industrial. Nos reservamos todos los derechos.

Documentation structur: Standard
Source file: KO050722.ODA

Rev.	Remarks	Date	Name	Date	22.07.2005	VSZ KOSICE	SIEMENS AG ISA TOOLS	Substation control system 6MB Function for operating sequence jump step	T = /BQ 3
				Drawn	LANG				+
				Appr.					-S114 Page 3
				Norm		Orig./Repl. 1/Repl. by		Table	

Name of function: BEI UL1-L2 >70% DA01

Cancel after first fulfilled rule: Yes

```
Function for switch interlocking <BEI UL1-L2 >70% DA01>
├─ IF <    >
│  └─ AND <    >
│     ├─ Read state from (R220, T201, MESSW. SPANNUNG DA01, NAPATIE L1-L2 DH2) = ZAC
│     └─ Switching direction = zap.
├─ THEN <    >
│  └─ Enable control = JA
├─ ELSE_IF <    >
│  └─ Switching direction = vyp.
├─ THEN <    >
│  └─ Enable control = JA
└─ ELSE <    >
   └─ Enable control = NEIN
```

Proprietary data, company confidential. All rights reserved.
Confia a titre de secret d'entreprise. Tous droits r,serv,s.
Comunicado como segredo empresarial. Reservados todos os direitos.
Confiado como secreto industrial. Nos reservamos todos los derechos.

The reproduction, transmission or use of this document or its is not permitted without express written authority.
Offenders will be liable for damages. All rights, including rights created by patent grant or registration of a utility model or design, are reserved

Documentation structur: Standard
Source file: KO050722.ODA

			Date	22.07.2005	VSZ KOSICE	SIEMENS AG ISA TOOLS	Substation control system 6MB Function for switch interlocking	T = /BQ 4	
			Drawn	LANG				+	
			Appr.					-S114	Page 4
F	Remarks	Date	Name	Norm	Orig./Repl. 1/Repl. by		Table		

Name of function: BEI UL1-L2 >70% DA02

Cancel after first fulfilled rule: Yes

```
Function for switch interlocking <BEI UL1-L2 >70% DA02>
├─ IF <    >
│   └─ AND <    >
│       ├─ Read state from (R220, T202, MESSW. SPANNUNG DA02, NAPATIE L1-L2 DH2) = ZAC
│       └─ Switching direction = zap.
├─ THEN <    >
│   └─ Enable control = JA
├─ ELSE_IF <    >
│   └─ Switching direction = vyp.
├─ THEN <    >
│   └─ Enable control = JA
└─ ELSE <    >
    └─ Enable control = NEIN
```

The reproduction, transmission or use of this document or its is not permitted without express written authority. Offenders will be liable for damages. All rights, including rights created by patent grant or registration of a utility model or design, are reserved. Proprietary data, company confidential. All rights reserved. Confie a titre de secret d'entreprise. Tous droits reservés. Comunicado como segredo empresarial. Reservados todos os direitos. Confiado como secreto industrial. Nos reservamos todos los derechos.

Documentation structur: Standard
Source file: KO050722.ODA

Rev.	Remarks	Date	Name	Date	22.07.2005	VSZ KOSICE	SIEMENS AG ISA TOOLS	Substation control system 6MB Function for switch interlocking	T = /BQ 5
				Drawn	LANG				+
				Appr.					-S114 Page 5
				Norm		Orig./Repl. 1/Repl. by		Table	

Name of function: SCHALTVERRIEGELUNG FÜR FERNSTEUERUNG

Cancel after first fulfilled rule: Yes

```
Function for switch interlocking <SCHALTVERRIEGELUNG FÜR FERNSTEUERUNG>
├─ IF <    >
│   └─ Event source of control event = RD
├─ THEN <    >
│   └─ Enable control = NEIN
└─ ELSE <    >
    └─ Enable control = JA
```

Proprietary data, company confidential. All rights reserved.
Confie a titre de secret d'entreprise. Tous droits r,serv,s.
Comunicado como segredo empresarial. Reservados todos os direitos.
Confiado como secreto industrial. Nos reservamos todos los derechos.

The reproduction, transmission or use of this document or its is not permitted without express written authority.
Offenders will be liable for damages. All rights, including rights created by patent grant or registration of a utility model or design, are reserved

Documentation structur: Standard
Source file: KO050722.ODA

			Date	22.07.2005	VSZ KOSICE	SIEMENS AG ISA TOOLS	Substation control system 6MB Function for switch interlocking	T = /BQ 6	
			Drawn	LANG				+	
			Appr.					-S114	Page 6
F	Remarks	Date	Name Norm		Orig./Repl. 1/Repl. by		Table		

Name of function: SCHALTVERRIEGELUNG Q8 bei UG1 L1

Cancel after first fulfilled rule: Yes

```
Function for switch interlocking <SCHALTVERRIEGELUNG Q8 bei UG1 L1>
├─ IF <    >
│  └─ AND <    >
│     ├─ Read state from (    , GA-ENDE-MARKIERUNG, from the area of the acquisition unit) = KOM
│     └─ OR <    >
│        ├─ Read state from (MESSWERTE SPANNUNG, NAPATIE L1 DH2, from same area)= KOM
│        └─ Read state from (MESSWERTE SPANNUNG, NAPATIE L1-L2 DH2, from same area)= KOM
├─ THEN <    >
│  └─ Enable control = JA
└─ ELSE <    >
   └─ Enable control = NEIN
```

Proprietary data, company confidential. All rights reserved.
Confie a titre de secret d'entreprise. Tous droits réservés.
Comunicado como segredo empresarial. Reservados todos os direitos.
Confiado como secreto industrial. Nos reservamos todos los derechos.

The reproduction, transmission or use of this document or its
is not permitted without express written authority.
Offenders will be liable for damages. All rights, including rights
created by patent grant or registration of a utility model or design, are reserved.

Documentation structur: Standard
Source file: KO050722.ODA

Rev.	Remarks	Date	Name	Date	22.07.2005	VSZ KOSICE	SIEMENS AG ISA TOOLS	Substation control system 6MB Function for switch interlocking	T = /BQ 7
				Drawn	LANG				+
				Appr.					
				Norm		Orig./Repl. 1/Repl. by		Table	-S114 Page 7

Name of function: Stufengleichheit T201

Cancel after first fulfilled rule: Yes

```
Function for switch interlocking <Stufengleichheit T201>
├─ IF <    >
│  └─ Read state from (R220, T201, PORUCHA PARAL.REG.) = KON
├─ THEN <    >
│  └─ Enable control = JA
└─ ELSE <    >
   └─ Enable control = NEIN
```

Proprietary data, company confidential. All rights reserved.
Confie a titre de secret d'entreprise. Tous droits r,serv,s.
Comunicado como segredo empresarial. Reservados todos os direitos.
Confiado como secreto industrial. Nos reservamos todos los derechos.

The reproduction, transmission or use of this document or its is not permitted without expres written authority.
Offenders will be liable for damages. All rights, including rights created by patent grant or registration of a utility model or design, are reserved

Documentation structur: Standard
Source file: KO050722.ODA

			Date	22.07.2005	VSZ KOSICE	SIEMENS AG ISA TOOLS	Substation control system 6MB Function for switch interlocking
			Drawn	LANG			
			Appr.				
F	Remarks	Date	Name	Norm	Orig./Repl. 1/Repl. by		Table

T = /BQ 8
+
-S114
Page 8

Name of function: Stufengleichheit T202

Cancel after first fulfilled rule: Yes

```
Function for switch interlocking <Stufengleichheit T202>
├─ IF <    >
│   └─ Read state from (R220, T202, PORUCHA PARAL.REG.) = KON
├─ THEN <    >
│   └─ Enable control = JA
└─ ELSE <    >
    └─ Enable control = NEIN
```

Proprietary data, company confidential. All rights reserved.
Confie a titre de secret d'entreprise. Tous droits réservés.
Comunicado como segredo empresarial. Reservados todos os direitos.
Confiado como secreto industrial. Nos reservamos todos los derechos.

The reproduction, transmission or use of this document or its is not permitted without express written authority.
Offenders will be liable for damages. All rights, including rights created by patent grant or registration of a utility model or design, are reserved.

Documentation structur: Standard
Source file: KO050722.ODA

Rev.	Remarks	Date	Name	Date	22.07.2005	VSZ KOSICE	SIEMENS AG ISA TOOLS	Substation control system 6MB Function for switch interlocking	T = /BQ 9
				Drawn	LANG				+
				Appr.					
				Norm		Orig./Repl. 1/Repl. by		Table	-S114 Page 9

Name of function: Regelarteinstellung Verteiler

Cancel after first fulfilled rule: Yes

```
Function for variable operating sequences <Regelarteinstellung Verteiler>
 ├─ IF <    >
 │   └─ Triggering directly with (Initiation information) = JA
 ├─ THEN <    >
 │   └─ Call function of same type TR Reglerarteinstellung ( Function for variable operating sequences )
 ├─ ELSE_IF <    >
 │   └─ Triggering directly with (Initiation information) = JA
 └─ THEN <    >
     └─ Call function of same type TR Reglerarteinstellung T102 ( Function for variable operating sequences )
```

Proprietary data, company confidential. All rights reserved.
Confia a tire de secret d'entreprise. Tous droits reservis.
Comunicado como secreto empresarial. Reservados todos os direitos
Comunicado como secreto industrial. Nos reservamos todos los derechos
The reproduction, transmission or use of this document or its
is not permitted without express written authority.
Offenders will be liable for damages. All rights, including rights
created by patent grant or registration of a utility model or design, are reserved.

Documentation structur: Standard
Source file: K0050722.ODA

			Date	22.07.2005	VSZ KOSICE	SIEMENS AG ISATOOLS	Substation control system 6MB Function for variable operating sequences
			Drawn	LANG			
			Appr.				
R	Remarks	Date	Name	Norm	Orig./Repl. 1/Repl. by		Table

T = /BQ 10
+
-S114
Page

Name of function: Sollwerteinstellung Verteiler

Cancel after first fulfilled rule: Yes

```
Function for variable operating sequences <Sollwerteinstellung Verteiler>
├─ IF <    >
│   └─ Triggering directly with (Initiation information) = JA
├─ THEN <    >
│   └─ Call function of same type TR Sollwerteinstellung ( Function for variable operating sequences )
├─ ELSE_IF <    >
│   └─ Triggering directly with (Initiation information) = JA
└─ THEN <    >
    └─ Call function of same type TR Sollwerteinstellung 102 ( Function for variable operating sequences )
```

The reproduction, transmission or use of this document or its is not permitted without express written authority. Offenders will be liable for damages. All rights, including rights created by patent grant or registration of a utility model or design, are reserved. Proprietary data, company confidential. All rights reserved. Confie a titre de secret d'entreprise. Tous droits réservés. Comunicado como segredo empresarial. Reservados todos os direitos. Confiado como secreto industrial. Nos reservamos todos los derechos.

Documentation structur: Standard
Source file: KO050722.ODA

Rev.	Remarks	Date	Name	Date	22.07.2005	VSZ KOSICE	SIEMENS AG ISA TOOLS	Substation control system 6MB Function for variable operating sequences	T = /BQ 11
				Drawn	LANG				+
				Appr.					-S114 Page 11
				Norm		Orig./Repl. 1/Repl. by		Table	

Name of function: Synchr. Kupplung Unsyn ein

Cancel after first fulfilled rule: Yes

```
Function for variable operating sequences <Synchr. Kupplung Unsyn ein>
├─ IF <    >
│   └─ Triggering directly with (Initiation information) = JA
└─ THEN <    >
    ├─ Command step with (R110, EA05, VYPINAC Q0, SCHALTZUSTAND) = zap.
    ├─ Following block for commands/flags = 9
    └─ Following block for operating sequence step = 9
```

Proprietary data, company confidential. All rights reserved.
Confie a titre de secret d'entreprise. Tous droits réservés.
Comunicado como segredo empresarial. Reservados todos os direitos.
Confiado como secreto industrial. Nos reservamos todos los derechos.
The reproduction, transmission or use of this document or its
is not permitted without express written authority.
Offenders will be liable for damages. All rights, including rights
created by patent grant or registration of a utility model or design, are reserved

Documentation structur: Standard
Source file: KO050722.ODA

			Date	22.07.2005	VSZ KOSICE	SIEMENS AG ISA TOOLS	Substation control system 6MB Function for variable operating sequences	T = /BQ 12	
			Drawn	LANG				+	
			Appr.						
Rr	Remarks	Date	Name Norm		Orig./Repl. 1/Repl. by		Table	-S114	Page

Name of function: Synchronisierung 10KV

Cancel after first fulfilled rule: Yes

```
Function for variable operating sequences <Synchronisierung 10KV>
├─ IF <    >
│  └─ AND <    >
│     ├─ Read state from (T60, KA08, KOBKA, SCHALTZUSTAND) = zap.
│     ├─ Triggering directly with (T201, TERC, VYPINAC Q0, SCHALTZUSTAND) = JA
│     └─ Switching direction = zap.
├─ THEN <    >
│  ├─ Flag setting step with (R110, EA01/3, SYNCHRO BEZI) = ZAC
│  ├─ Following block for commands/flags = 1
│  ├─ Following block for operating sequence step = 1
│  ├─ Command step with (R10, KA01, NAPATIE PRE SYNCHRONIZ.1) = ZAC
│  ├─ Following block for commands/flags = 4
│  ├─ Following block for operating sequence step = 4
│  ├─ Command step with (R10, PRIVOD, NAPATIE PRE SYNCHRONIZ.) = ZAC
│  ├─ Following block for commands/flags = 7
│  ├─ Following block for operating sequence step = 7
│  ├─ Delay = 11
│  ├─ Following block for delay step = 10
│  ├─ Command step with (Initiation information) = zap.
│  ├─ Following block for synchronization command = 12
│  ├─ Following block for operating sequence step = 12
│  ├─ Unconditional jump = WEITER
│  ├─ Following block for jump step = 15
│  ├─ Label = Sprungziel bei Befund/Abbruch
│  ├─ Following block for label steps = 17
│  ├─ Flag setting step with (R110, EA01/3, SYNCHRO NEUSPESNE) = ZAC
│  ├─ Following block for commands/flags = 19
│  ├─ Following block for operating sequence step = 19
│  ├─ Label = WEITER
│  ├─ Following block for label steps = 22
│  ├─ Command step with (R10, KA01, NAPATIE PRE SYNCHRONIZ.1) = KON
│  ├─ Following block for commands/flags = 24
│  ├─ Following block for operating sequence step = 24
│  ├─ Command step with (R10, PRIVOD, NAPATIE PRE SYNCHRONIZ.) = KON
│  ├─ Following block for commands/flags = 27
```

Proprietary data, company confidential. All rights reserved.
Confie a titre de secret d'entreprise. Tous droits reservés.
Comunicado como segredo empresarial. Reservados todos os direitos.
Confiado como secreto industrial. Nos reservamos todos los derechos.
The reproduction, transmission or use of this document or its is not permitted without expres written authority.
Offenders will be liable for damages. All rights, including rights created by patent grant or registration of a utility model or design, are reserved

Name of function: Synchronisierung 10KV

Cancel after first fulfilled rule: Yes

```
  ├─ Following block for operating sequence step = 27
  ├─ Flag setting step with (R110, EA01/3, SYNCHRO BEZI) = KON
  ├─ Following block for commands/flags = 30
  ├─ Following block for operating sequence step = 30
  ├─ Global jump = Sprungziel bei Befund/Abbruch
  └─ Following block for jump step = 33
├─ ELSE_IF <    >
  └─ AND <    >
     ├─ Read state from (T60, KA08, KOBKA, SCHALTZUSTAND) = zap.
     ├─ Triggering directly with (T202, TERC, VYPINAC Q0, SCHALTZUSTAND) = JA
     └─ Switching direction = zap.
├─ THEN <    >
  ├─ Flag setting step with (R110, EA01/3, SYNCHRO BEZI) = ZAC
  ├─ Following block for commands/flags = 1
  ├─ Following block for operating sequence step = 1
  ├─ Command step with (R10, KA02, NAPATIE PRE SYNCHRONIZ.) = ZAC
  ├─ Following block for commands/flags = 4
  ├─ Following block for operating sequence step = 4
  ├─ Command step with (R10, PRIVOD, NAPATIE PRE SYNCHRONIZ.) = ZAC
  ├─ Following block for commands/flags = 7
  ├─ Following block for operating sequence step = 7
  ├─ Delay = 11
  ├─ Following block for delay step = 10
  ├─ Command step with (Initiation information) = zap.
  ├─ Following block for synchronization command = 12
  ├─ Following block for operating sequence step = 12
  ├─ Unconditional jump = WEITER
  ├─ Following block for jump step = 15
  ├─ Label = Sprungziel bei Befund/Abbruch
  ├─ Following block for label steps = 17
  ├─ Flag setting step with (R110, EA01/3, SYNCHRO NEUSPESNE) = ZAC
  ├─ Following block for commands/flags = 19
  ├─ Following block for operating sequence step = 19
  ├─ Label = WEITER
  ├─ Following block for label steps = 22
```

Proprietary data, company confidential. All rights reserved.
Confie a titre de secret d'entreprise. Tous droits réservés.
Comunicado como segredo empresarial. Reservados todos os direitos.
Confiado como secreto industrial. Nos reservamos todos los derechos.
The reproduction, transmission or use of this document or its is not permitted without express written authority.
Offenders will be liable for damages. All rights, including rights created by patent grant or registration of a utility model or design, are reserved

Documentation structur: Standard
Source file: KO050722.ODA

			Date	22.07.2005	VSZ KOSICE	SIEMENS AG ISAOOLS	Substation control system 6MB Function for variable operating sequences
			Drawn	LANG			
			Appr.				Table
F	Remarks	Date	Name	Norm	Orig./Repl. 1/Repl. by		

T = /BQ 14
+
-S114
Page 14

Name of function: Synchronisierung 10KV

Cancel after first fulfilled rule: Yes

```
  ├─ Command step with (R10, KA02, NAPATIE PRE SYNCHRONIZ.) = KON
  ├─ Following block for commands/flags = 24
  ├─ Following block for operating sequence step = 24
  ├─ Command step with (R10, PRIVOD, NAPATIE PRE SYNCHRONIZ.) = KON
  ├─ Following block for commands/flags = 27
  ├─ Following block for operating sequence step = 27
  ├─ Flag setting step with (R110, EA01/3, SYNCHRO BEZI) = KON
  ├─ Following block for commands/flags = 30
  ├─ Following block for operating sequence step = 30
  ├─ Global jump = Sprungziel bei Befund/Abbruch
  └─ Following block for jump step = 33
├─ ELSE_IF <   >
  └─ OR <   >
     ├─ Triggering directly with (T201, TERC, VYPINAC Q0, SCHALTZUSTAND) = JA
     ├─ Triggering directly with (T202, TERC, VYPINAC Q0, SCHALTZUSTAND) = JA
     └─ AND <   >
        ├─ Read state from (T60, KA08, KOBKA, SCHALTZUSTAND) = vyp.
        └─ Switching direction = zap.
└─ THEN <   >
  ├─ Flag setting step with (R110, EA01/3, SYNCHRO BEZI) = ZAC
  ├─ Following block for commands/flags = 1
  ├─ Following block for operating sequence step = 1
  ├─ Command step with (R10, KA01, NAPATIE PRE SYNCHRONIZ.2) = ZAC
  ├─ Following block for commands/flags = 4
  ├─ Following block for operating sequence step = 4
  ├─ Command step with (R10, KA02, NAPATIE PRE SYNCHRONIZ.) = ZAC
  ├─ Following block for commands/flags = 7
  ├─ Following block for operating sequence step = 7
  ├─ Delay = 11
  ├─ Following block for delay step = 10
  ├─ Command step with (Initiation information) = zap.
  ├─ Following block for synchronization command = 12
  ├─ Following block for operating sequence step = 12
  ├─ Unconditional jump = WEITER
  ├─ Following block for jump step = 15
```

The reproduction, transmission or use of this document or its is not permitted without express written authority. Offenders will be liable for damages. All rights, including rights created by patent grant or registration of a utility model or design, are reserved. Proprietary data, company confidential. All rights reserved. Confie a titre de secret d'entreprise. Tous droits réservés. Comunicado como segredo empresarial. Reservados todos os direitos. Confiado como secreto industrial. Nos reservamos todos los derechos.

Documentation structur: Standard
Source file: KO050722.ODA

Rev.	Remarks	Date	Name	Date	22.07.2005	VSZ KOSICE	SIEMENS AG ISA TOOLS	Substation control system 6MB Function for variable operating sequences	T = /BQ 15
				Drawn	LANG				+
				Appr.					-S114 Page 15
				Norm		Orig./Repl. 1/Repl. by		Table	

Name of function: Synchronisierung 10KV

Cancel after first fulfilled rule: Yes

```
├─ Label = Sprungziel bei Befund/Abbruch
├─ Following block for label steps = 17
├─ Flag setting step with (R110, EA01/3, SYNCHRO NEUSPESNE) = ZAC
├─ Following block for commands/flags = 19
├─ Following block for operating sequence step = 19
├─ Label = WEITER
├─ Following block for label steps = 22
├─ Command step with (R10, KA01, NAPATIE PRE SYNCHRONIZ.2) = KON
├─ Following block for commands/flags = 24
├─ Following block for operating sequence step = 24
├─ Command step with (R10, KA02, NAPATIE PRE SYNCHRONIZ.) = KON
├─ Following block for commands/flags = 27
├─ Following block for operating sequence step = 27
├─ Flag setting step with (R110, EA01/3, SYNCHRO BEZI) = KON
├─ Following block for commands/flags = 30
├─ Following block for operating sequence step = 30
├─ Global jump = Sprungziel bei Befund/Abbruch
└─ Following block for jump step = 33
```

The reproduction, transmission or use of this document or its contents is not permitted without express written authority. Offenders will be liable for damages. All rights, including rights created by patent grant or registration of a utility model or design, are reserved. Proprietary data, company confidential. All rights reserved. Confie a titre de secret d'entreprise. Tous droits réservés. Comunicado como segredo empresarial. Reservados todos os direitos. Confiado como secreto industrial. Nos reservamos todos los derechos.

Documentation structur: Standard
Source file: KO050722.ODA

			Date	22.07.2005	VSZ KOSICE	SIEMENS AG ISA TOOLS	Substation control system 6MB Function for variable operating sequences	T = /BQ 16	
			Drawn	LANG				+	
			Appr.					-S114	Page 16
F	Remarks	Date	Name Norm		Orig./Repl. 1/Repl. by		Table		

Name of function: Synchronisierung 110KV

Cancel after first fulfilled rule: Yes

```
Function for variable operating sequences <Synchronisierung 110KV>
 ├─ IF <    >
 │   └─ AND <    >
 │       ├─ Read state from (ODPOJOVAC Q2, SCHALTZUSTAND, from same area)= vyp.
 │       ├─ Read state from (ODPOJOVAC Q1, SCHALTZUSTAND, from same area)= zap.
 │       └─ Switching direction = zap.
 ├─ THEN <    >
 │   ├─ Flag setting step with (R110, EA01/3, SYNCHRO BEZI) = ZAC
 │   ├─ Following block for commands/flags = 1
 │   ├─ Following block for operating sequence step = 1
 │   ├─ Command step with (R110, E_W1, NAPATIE PRE SYNCHRONIZ.) = ZAC
 │   ├─ Following block for commands/flags = 4
 │   ├─ Following block for operating sequence step = 4
 │   ├─ Command step with (    , NAPATIE PRE SYNCHRONIZ., from same area)= ZAC
 │   ├─ Following block for commands/flags = 7
 │   ├─ Following block for operating sequence step = 7
 │   ├─ Delay = 11
 │   ├─ Following block for delay step = 10
 │   ├─ Command step with (Initiation information) = zap.
 │   ├─ Following block for synchronization command = 12
 │   ├─ Following block for operating sequence step = 12
 │   ├─ Unconditional jump = WEITER
 │   ├─ Following block for jump step = 15
 │   ├─ Label = Sprungziel bei Befund/Abbruch
 │   ├─ Following block for label steps = 17
 │   ├─ Flag setting step with (R110, EA01/3, SYNCHRO NEUSPESNE) = ZAC
 │   ├─ Following block for commands/flags = 19
 │   ├─ Following block for operating sequence step = 19
 │   ├─ Label = WEITER
 │   ├─ Following block for label steps = 22
 │   ├─ Command step with (R110, E_W1, NAPATIE PRE SYNCHRONIZ.) = KON
 │   ├─ Following block for commands/flags = 24
 │   ├─ Following block for operating sequence step = 24
 │   ├─ Command step with (    , NAPATIE PRE SYNCHRONIZ., from same area)= KON
 │   ├─ Following block for commands/flags = 27
```

Proprietary data, company confidential. All rights reserved.
Confia a tire da secret dentreprise. Tous droits reservis.
Comunicado como segredo empresarial. Reservados todos os direitos.
Confiado como secreto industrial. Nos reservamos todos los derechos.
The reproduction, transmission or use of this document or its
is not permitted without express written authority.
Offenders will be liable for damages. All rights, including rights
created by patent grant or registration of a utility model or design, are reserved

Name of function: Synchronisierung 110KV

Cancel after first fulfilled rule: Yes

```
  ├─ Following block for operating sequence step = 27
  ├─ Flag setting step with (R110, EA01/3, SYNCHRO BEZI) = KON
  ├─ Following block for commands/flags = 30
  ├─ Following block for operating sequence step = 30
  ├─ Global jump = Sprungziel bei Befund/Abbruch
  └─ Following block for jump step = 33
├─ ELSE_IF <    >
  └─ AND <    >
     ├─ Read state from (ODPOJOVAC Q2, SCHALTZUSTAND, from same area)= zap.
     ├─ Read state from (ODPOJOVAC Q1, SCHALTZUSTAND, from same area)= vyp.
     └─ Switching direction = zap.
└─ THEN <    >
  ├─ Flag setting step with (R110, EA01/3, SYNCHRO BEZI) = ZAC
  ├─ Following block for commands/flags = 1
  ├─ Following block for operating sequence step = 1
  ├─ Command step with (R110, E_W2, NAPATIE PRE SYNCHRONIZ.) = ZAC
  ├─ Following block for commands/flags = 4
  ├─ Following block for operating sequence step = 4
  ├─ Command step with (    , NAPATIE PRE SYNCHRONIZ., from same area)= ZAC
  ├─ Following block for commands/flags = 7
  ├─ Following block for operating sequence step = 7
  ├─ Delay = 11
  ├─ Following block for delay step = 10
  ├─ Command step with (Initiation information) = zap.
  ├─ Following block for synchronization command = 12
  ├─ Following block for operating sequence step = 12
  ├─ Unconditional jump = WEITER
  ├─ Following block for jump step = 15
  ├─ Label = Sprungziel bei Befund/Abbruch
  ├─ Following block for label steps = 17
  ├─ Flag setting step with (R110, EA01/3, SYNCHRO NEUSPESNE) = ZAC
  ├─ Following block for commands/flags = 19
  ├─ Following block for operating sequence step = 19
  ├─ Label = WEITER
  ├─ Following block for label steps = 22
```

Proprietary data, company confidential. All rights reserved.
Confia a titre de secret d'entreprise. Tous droits réservés.
Comunicado como segredo empresarial. Reservados todos os direitos.
Confiado como secreto industrial. Nos reservamos todos los derechos.

The reproduction, transmission or use of this document or its is not permitted without expres written authority.
Offenders will be liable for damages. All rights, including rights created by patent grant or registration of a utility model or design, are reserved

Documentation structur: Standard
Source file: KO050722.ODA

			Date	22.07.2005	VSZ KOSICE	SIEMENS AG ISA TOOLS	Substation control system 6MB Function for variable operating sequences
			Drawn	LANG			
			Appr.				Table
F	Remarks	Date	Name	Norm	Orig./Repl. 1/Repl. by		

T = /BQ 18
+
-S114
Page 3

Name of function: Synchronisierung 110KV

Cancel after first fulfilled rule: Yes

```
├─ Command step with (R110, E_W2, NAPATIE PRE SYNCHRONIZ.) = KON
├─ Following block for commands/flags = 24
├─ Following block for operating sequence step = 24
├─ Command step with (    , NAPATIE PRE SYNCHRONIZ., from same area)= KON
├─ Following block for commands/flags = 27
├─ Following block for operating sequence step = 27
├─ Flag setting step with (R110, EA01/3, SYNCHRO BEZI) = KON
├─ Following block for commands/flags = 30
├─ Following block for operating sequence step = 30
├─ Global jump = Sprungziel bei Befund/Abbruch
└─ Following block for jump step = 33
```

Proprietary data, company confidential. All rights reserved.
Confia a titre de secret d'entreprise. Tous droits reservs.
Comunicado como segredo empresarial. Reservados todos os direitos.
Confiado como secreto industrial. Nos reservamos todos los derechos.

The reproduction, transmission or use of this document or its is not permitted without express written authority. Offenders will be liable for damages. All rights, including rights created by patent grant or registration of a utility model or design, are reserved

Documentation structur: Standard
Source file: KO050722.ODA

Rev.	Remarks	Date	Name	Date	22.07.2005	VSZ KOSICE	SIEMENS AG ISA TOOLS	Substation control system 6MB Function for variable operating sequences	T = /BQ 19
				Drawn	LANG				+
				Appr.					
				Norm		Orig./Repl. 1/Repl. by		Table	-S114 Page 19

Name of function: Synchronisierung Kupplung 7VK512

Cancel after first fulfilled rule: Yes

```
Function for variable operating sequences <Synchronisierung Kupplung 7VK512>
├─ IF <    >
│   └─ Triggering directly with (Initiation information) = JA
└─ THEN <    >
    ├─ Flag setting step with (R110, EA05, Mark.Messwerte E/A) = KOM
    ├─ Following block for commands/flags = 1
    ├─ Following block for operating sequence step = 1
    ├─ Command step with (R110, EA05, VYPINAC Q0, SCHALTZUSTAND) = zap.
    ├─ Following block for commands/flags = 4
    ├─ Following block for operating sequence step = 4
    ├─ Label = L1
    ├─ Following block for label steps = 7
    ├─ Flag setting step with (R110, EA05, Mark.Messwerte E/A) = GEH
    ├─ Following block for commands/flags = 9
    ├─ Following block for operating sequence step = 9
    ├─ Delay = 16
    ├─ Following block for delay step = 15
    ├─ Global jump = L1
    └─ Following block for jump step = 20
```

Proprietary data, company confidential. All rights reserved.
Confie a tiro de secret d'entreprise. Tous droits réservés.
Comunicado como segredo empresarial. Reservados todos os direitos.
Confiado como secreto industrial. Nos reservamos todos los derechos.

The reproduction, transmission or use of this document or its is not permitted without expres written authority.
Offenders will be liable for damages. All rights, including rights created by patent grant or registration of a utility model or design, are reserved

Documentation structur: Standard
Source file: KO050722.ODA

			Date	22.07.2005	VSZ KOSICE	SIEMENS AG ISAOOLS	Substation control system 6MB Function for variable operating sequences
			Drawn	LANG			
			Appr.				Table
F	Remarks	Date	Name	Norm	Orig./Repl. 1/Repl. by		

T = /BQ 20
+
-S114
Page 20

Name of function: Synchronisierung Messanstoss

Cancel after first fulfilled rule: Yes

```
Function for variable operating sequences <Synchronisierung Messanstoss>
 ├─ IF <    >
 │   └─ OR <    >
 │       ├─ Triggering directly with (T201, TERC, VYPINAC Q0, SCHALTZUSTAND) = JA
 │       ├─ Triggering directly with (T202, TERC, VYPINAC Q0, SCHALTZUSTAND) = JA
 │       └─ AND <    >
 │           ├─ Read state from (GERAETE-STATUSMELDUNGEN, R110 EA01 SY, PORUCHA) = KON
 │           └─ Read state from (GERAETE-STATUSMELDUNGEN, R110 EA01 EAG/3, GA-ENDE-MARKIERUNG) = ZAC
 ├─ THEN <    >
 │   ├─ Flag setting step with (R110, EA01/3, SYNCHRO MER BEZI) = ZAC
 │   ├─ Following block for commands/flags = 1
 │   ├─ Following block for operating sequence step = 1
 │   ├─ Command step with (Initiation information) = zap.
 │   ├─ Following block for synchronization command = 7
 │   ├─ Following block for operating sequence step = 7
 │   ├─ Label = Sprungziel bei Befund/Abbruch
 │   ├─ Following block for label steps = 10
 │   ├─ Global jump = Sprungziel bei Befund/Abbruch
 │   ├─ Following block for jump step = 15
 │   ├─ Flag setting step with (R110, EA01/3, SYNCHRO MER BEZI) = KON
 │   ├─ Following block for commands/flags = 17
 │   └─ Following block for operating sequence step = 17
 ├─ ELSE_IF <    >
 │   └─ AND <    >
 │       ├─ Triggering directly with (Initiation information) = JA
 │       ├─ Read state from (GERAETE-STATUSMELDUNGEN, R110 EA01 SY, PORUCHA) = KON
 │       └─ Read state from (GERAETE-STATUSMELDUNGEN, R110 EA01 EAG/3, GA-ENDE-MARKIERUNG) = ZAC
 └─ THEN <    >
     ├─ Flag setting step with (R110, EA01/3, SYNCHRO MER BEZI) = ZAC
     ├─ Following block for commands/flags = 1
     ├─ Following block for operating sequence step = 1
     ├─ Command step with (Initiation information) = zap.
     ├─ Following block for synchronization command = 7
     ├─ Following block for operating sequence step = 7
     ├─ Label = Sprungziel bei Befund/Abbruch
```

Proprietary data, company confidential. All rights reserved
Confia a tina de secret dentreprise. Tous droits reservés
Comunicado como segredo empresarial. Reservados todos os direitos
Confiado como secreto industrial. Nos reservamos todos los derechos
The reproduction, transmission or use of this document or its
is not permitted without expres written authority.
Offenders will be liable for damages. All rights, including rights
created by patent grant or registration of a utility model or design, are reserved

Documentation structur: Standard
Source file: KO050722.ODA

Rev.	Remarks	Date	Name	Norm	Date 22.07.2005	Drawn LANG	Appr.	Orig./Repl. 1/Repl. by

VSZ KOSICE

SIEMENS AG ISAOOLS

Substation control system 6MB
Function for variable operating sequences

Table

T = /BQ 21
+
-S114
Page 21

Name of function: Synchronisierung Messanstoss

Cancel after first fulfilled rule: Yes

```
├─ Following block for label steps = 10
├─ Global jump = Sprungziel bei Befund/Abbruch
├─ Following block for jump step = 15
├─ Flag setting step with (R110, EA01/3, SYNCHRO MER BEZI) = KON
├─ Following block for commands/flags = 17
└─ Following block for operating sequence step = 17
```

Proprietary data, company confidential. All rights reserved.
Confie a titre de secret d'entreprise. Tous droits r,serv,s.
Comunicado como segredo empresarial. Reservados todos os direitos.
Confiado como secreto industrial. Nos reservamos todos los derechos.

The reproduction, transmission or use of this document or its is not permitted without express written authority. Offenders will be liable for damages. All rights, including rights created by patent grant or registration of a utility model or design, are reserved

Documentation structur: Standard
Source file: KO050722.ODA

				Date	22.07.2005	VSZ KOSICE	SIEMENS AG ISAOOLS	Substation control system 6MB Function for variable operating sequences
				Drawn	LANG			
				Appr.				
F	Remarks	Date	Name	Norm		Orig./Repl. 1/Repl. by		Table

T = /BQ 22
+
-S114
Page 22

Name of function: Synchronisierung Messanstoss 10KV

Cancel after first fulfilled rule: Yes

```
Function for variable operating sequences <Synchronisierung Messanstoss 10KV>
├─ IF <    >
│  └─ AND <    >
│     ├─ Read state from (T60, KA08, KOBKA, SCHALTZUSTAND) = zap.
│     ├─ Triggering directly with (T201, TERC, VYPINAC Q0, SCHALTZUSTAND) = JA
│     ├─ Read state from (GERAETE-STATUSMELDUNGEN, R110 EA01 EAG/3, GA-ENDE-MARKIERUNG) = ZAC
│     └─ Read state from (GERAETE-STATUSMELDUNGEN, R110 EA01 SY, PORUCHA) = KON
├─ THEN <    >
│  ├─ Flag setting step with (R110, EA01/3, SYNCHRO BEZI) = ZAC
│  ├─ Following block for commands/flags = 1
│  ├─ Following block for operating sequence step = 1
│  ├─ Command step with (R10, KA01, NAPATIE PRE SYNCHRONIZ.1) = ZAC
│  ├─ Following block for commands/flags = 4
│  ├─ Following block for operating sequence step = 4
│  ├─ Command step with (R10, PRIVOD, NAPATIE PRE SYNCHRONIZ.) = ZAC
│  ├─ Following block for commands/flags = 7
│  ├─ Following block for operating sequence step = 7
│  ├─ Delay = 11
│  ├─ Following block for delay step = 10
│  ├─ Command step with (Initiation information) = zap.
│  ├─ Following block for synchronization command = 12
│  ├─ Following block for operating sequence step = 12
│  ├─ Unconditional jump = WEITER
│  ├─ Following block for jump step = 15
│  ├─ Label = Sprungziel bei Befund/Abbruch
│  ├─ Following block for label steps = 17
│  ├─ Flag setting step with (R110, EA01/3, SYNCHRO NEUSPESNE) = ZAC
│  ├─ Following block for commands/flags = 19
│  ├─ Following block for operating sequence step = 19
│  ├─ Label = WEITER
│  ├─ Following block for label steps = 22
│  ├─ Command step with (R10, KA01, NAPATIE PRE SYNCHRONIZ.1) = KON
│  ├─ Following block for commands/flags = 24
│  ├─ Following block for operating sequence step = 24
│  ├─ Command step with (R10, PRIVOD, NAPATIE PRE SYNCHRONIZ.) = KON
```

Proprietary data, company confidential. All rights reserved.
Confie a titre de secret d'entreprise. Tous droits reserv.s.
Comunicado como segredo empresarial. Reservados todos os direitos.
Confiado como secreto industrial. Nos reservamos todos los derechos.

The reproduction, transmission or use of this document or its is not permitted without express written authority.
Offenders will be liable for damages. All rights, including rights created by patent grant or registration of a utility model or design, are reserved.

Documentation structur: Standard
Source file: KO050722.ODA

Rev.	Remarks	Date	Name	Date	22.07.2005	VSZ KOSICE	SIEMENS AG ISA TOOLS	Substation control system 6MB Function for variable operating sequences	T = /BQ 23
				Drawn	LANG				+
				Appr.					
				Norm		Orig./Repl. 1/Repl. by		Table	-S114 Page 23

Name of function: Synchronisierung Messanstoss 10KV

Cancel after first fulfilled rule: Yes

```
  ├─ Following block for commands/flags = 27
  ├─ Following block for operating sequence step = 27
  ├─ Flag setting step with (R110, EA01/3, SYNCHRO BEZI) = KON
  ├─ Following block for commands/flags = 30
  ├─ Following block for operating sequence step = 30
  ├─ Global jump = Sprungziel bei Befund/Abbruch
  └─ Following block for jump step = 33
├─ ELSE_IF <    >
  └─ AND <    >
     ├─ Read state from (T60, KA08, KOBKA, SCHALTZUSTAND) = zap.
     ├─ Triggering directly with (T202, TERC, VYPINAC Q0, SCHALTZUSTAND) = JA
     ├─ Read state from (GERAETE-STATUSMELDUNGEN, R110 EA01 SY, PORUCHA) = KON
     └─ Read state from (GERAETE-STATUSMELDUNGEN, R110 EA01 EAG/3, GA-ENDE-MARKIERUNG) = ZAC
├─ THEN <    >
  ├─ Flag setting step with (R110, EA01/3, SYNCHRO BEZI) = ZAC
  ├─ Following block for commands/flags = 1
  ├─ Following block for operating sequence step = 1
  ├─ Command step with (R10, KA02, NAPATIE PRE SYNCHRONIZ.) = ZAC
  ├─ Following block for commands/flags = 4
  ├─ Following block for operating sequence step = 4
  ├─ Command step with (R10, PRIVOD, NAPATIE PRE SYNCHRONIZ.) = ZAC
  ├─ Following block for commands/flags = 7
  ├─ Following block for operating sequence step = 7
  ├─ Delay = 11
  ├─ Following block for delay step = 10
  ├─ Command step with (Initiation information) = zap.
  ├─ Following block for synchronization command = 12
  ├─ Following block for operating sequence step = 12
  ├─ Unconditional jump = WEITER
  ├─ Following block for jump step = 15
  ├─ Label = Sprungziel bei Befund/Abbruch
  ├─ Following block for label steps = 17
  ├─ Flag setting step with (R110, EA01/3, SYNCHRO NEUSPESNE) = ZAC
  ├─ Following block for commands/flags = 19
  ├─ Following block for operating sequence step = 19
```

Proprietary data, company confidential. All rights reserved.
Confia a titre de secret d'entreprise. Tous droits r,serv,s.
Comunicado como segredo empresarial. Reservados todos os direitos.
Confiado como secreto industrial. Nos reservamos todos los derechos.

The reproduction, transmission or use of this document or its is not permitted without express written authority.
Offenders will be liable for damages. All rights, including rights created by patent grant or registration of a utility model or design, are reserved

Documentation structur: Standard
Source file: KO050722.ODA

			Date	22.07.2005	VSZ KOSICE	SIEMENS AG ISA TOOLS	Substation control system 6MB Function for variable operating sequences	T = /BQ 24	
			Drawn	LANG				+	
			Appr.					-S114	Page 24
F	Remarks	Date	Name	Norm	Orig./Repl. 1/Repl. by		Table		

Name of function: Synchronisierung Messanstoss 10KV

Cancel after first fulfilled rule: Yes

```
│   ├─ Label = WEITER
│   ├─ Following block for label steps = 22
│   ├─ Command step with (R10, KA02, NAPATIE PRE SYNCHRONIZ.) = KON
│   ├─ Following block for commands/flags = 24
│   ├─ Following block for operating sequence step = 24
│   ├─ Command step with (R10, PRIVOD, NAPATIE PRE SYNCHRONIZ.) = KON
│   ├─ Following block for commands/flags = 27
│   ├─ Following block for operating sequence step = 27
│   ├─ Flag setting step with (R110, EA01/3, SYNCHRO BEZI) = KON
│   ├─ Following block for commands/flags = 30
│   ├─ Following block for operating sequence step = 30
│   ├─ Global jump = Sprungziel bei Befund/Abbruch
│   └─ Following block for jump step = 33
├─ ELSE_IF <   >
│   └─ AND <   >
│       ├─ Read state from (T60, KA08, KOBKA, SCHALTZUSTAND) = vyp.
│       ├─ Read state from (GERAETE-STATUSMELDUNGEN, R110 EA01 EAG/3, GA-ENDE-MARKIERUNG) = ZAC
│       └─ Read state from (GERAETE-STATUSMELDUNGEN, R110 EA01 SY, PORUCHA) = KON
└─ THEN <   >
    ├─ Flag setting step with (R110, EA01/3, SYNCHRO BEZI) = ZAC
    ├─ Following block for commands/flags = 1
    ├─ Following block for operating sequence step = 1
    ├─ Command step with (R10, KA01, NAPATIE PRE SYNCHRONIZ.2) = ZAC
    ├─ Following block for commands/flags = 4
    ├─ Following block for operating sequence step = 4
    ├─ Command step with (R10, KA02, NAPATIE PRE SYNCHRONIZ.) = ZAC
    ├─ Following block for commands/flags = 7
    ├─ Following block for operating sequence step = 7
    ├─ Delay = 11
    ├─ Following block for delay step = 10
    ├─ Command step with (Initiation information) = zap.
    ├─ Following block for synchronization command = 12
    ├─ Following block for operating sequence step = 12
    ├─ Unconditional jump = WEITER
    ├─ Following block for jump step = 15
```

Proprietary data, company confidential. All rights reserved.
Confie a titre de secret d'entreprise. Tous droits reservés.
Comunicado como segredo empresarial. Reservados todos os direitos.
Confiado como secreto industrial. Nos reservamos todos los derechos.

The reproduction, transmission or use of this document or its is not permitted without expres written authority.
Offenders will be liable for damages. All rights, including rights created by patent grant or registration of a utility model or design, are reserved.

Documentation structur: Standard
Source file: KO050722.ODA

Rev.	Remarks	Date	Name	Date	22.07.2005	VSZ KOSICE	SIEMENS AG ISA TOOLS	Substation control system 6MB Function for variable operating sequences	T = /BQ 25
				Drawn	LANG				+
				Appr.					-S114 Page 25
				Norm		Orig./Repl. 1/Repl. by		Table	

Name of function: Synchronisierung Messanstoss 10KV

Cancel after first fulfilled rule: Yes

```
├─ Label = Sprungziel bei Befund/Abbruch
├─ Following block for label steps = 17
├─ Flag setting step with (R110, EA01/3, SYNCHRO NEUSPESNE) = ZAC
├─ Following block for commands/flags = 19
├─ Following block for operating sequence step = 19
├─ Label = WEITER
├─ Following block for label steps = 22
├─ Command step with (R10, KA01, NAPATIE PRE SYNCHRONIZ.2) = KON
├─ Following block for commands/flags = 24
├─ Following block for operating sequence step = 24
├─ Command step with (R10, KA02, NAPATIE PRE SYNCHRONIZ.) = KON
├─ Following block for commands/flags = 27
├─ Following block for operating sequence step = 27
├─ Flag setting step with (R110, EA01/3, SYNCHRO BEZI) = KON
├─ Following block for commands/flags = 30
├─ Following block for operating sequence step = 30
├─ Global jump = Sprungziel bei Befund/Abbruch
└─ Following block for jump step = 33
```

The reproduction, transmission or use of this document or its contents is not permitted without express written authority. Offenders will be liable for damages. All rights, including rights created by patent grant or registration of a utility model or design, are reserved. Proprietary data, company confidential. All rights reserved. Confie a titre de secret d'entreprise. Tous droits réservés. Comunicado como segredo empresarial. Reservados todos os direitos. Confiado como secreto industrial. Nos reservamos todos los derechos.

Documentation structur: Standard
Source file: KO050722.ODA

			Date	22.07.2005	VSZ KOSICE	SIEMENS AG ISAOOLS	Substation control system 6MB Function for variable operating sequences	T = /BQ 26	
			Drawn	LANG				+	
			Appr.					-S114	Page 26
F	Remarks	Date	Name	Norm	Orig./Repl. 1/Repl. by		Table		

Name of function: Synchronisierung Messanstoss intern

Cancel after first fulfilled rule: Yes

```
Function for variable operating sequences <Synchronisierung Messanstoss intern>
├─ IF <    >
│  └─ AND <    >
│     ├─ Read state from (ODPOJOVAC Q2, SCHALTZUSTAND, from same area)= vyp.
│     ├─ Read state from (ODPOJOVAC Q1, SCHALTZUSTAND, from same area)= zap.
│     ├─ Triggering directly with (Initiation information) = JA
│     ├─ Read state from (GERAETE-STATUSMELDUNGEN, R110 EA01 EAG/3, GA-ENDE-MARKIERUNG) = ZAC
│     └─ Read state from (GERAETE-STATUSMELDUNGEN, R110 EA01 SY, PORUCHA) = KON
├─ THEN <    >
│  ├─ Flag setting step with (R110, EA01/3, SYNCHRO BEZI) = ZAC
│  ├─ Following block for commands/flags = 1
│  ├─ Following block for operating sequence step = 1
│  ├─ Command step with (R110, E_W1, NAPATIE PRE SYNCHRONIZ.) = ZAC
│  ├─ Following block for commands/flags = 4
│  ├─ Following block for operating sequence step = 4
│  ├─ Command step with (    , NAPATIE PRE SYNCHRONIZ., from same area)= ZAC
│  ├─ Following block for commands/flags = 7
│  ├─ Following block for operating sequence step = 7
│  ├─ Delay = 11
│  ├─ Following block for delay step = 10
│  ├─ Command step with (Initiation information) = zap.
│  ├─ Following block for synchronization command = 12
│  ├─ Following block for operating sequence step = 12
│  ├─ Unconditional jump = WEITER
│  ├─ Following block for jump step = 15
│  ├─ Label = Sprungziel bei Befund/Abbruch
│  ├─ Following block for label steps = 17
│  ├─ Flag setting step with (R110, EA01/3, SYNCHRO NEUSPESNE) = ZAC
│  ├─ Following block for commands/flags = 19
│  ├─ Following block for operating sequence step = 19
│  ├─ Label = WEITER
│  ├─ Following block for label steps = 22
│  ├─ Command step with (R110, E_W1, NAPATIE PRE SYNCHRONIZ.) = KON
│  ├─ Following block for commands/flags = 24
│  ├─ Following block for operating sequence step = 24
```

Proprietary data, company confidential. All rights reserved.
Confiaa a titre de secret d'entreprise. Tous droits r,serv,s.
Comunicado como segredo empresarial. Reservados todos os direitos.
Confiado como secreto industrial. Nos reservamos todos los derechos.

The reproduction, transmission or use of this document or its is not permitted without expres written authority.
Offenders will be liable for damages. All rights, including rights created by patent grant or registration of a utility model or design, are reserved

Documentation structur: Standard
Source file: KO050722.ODA

Rev.	Remarks	Date	Name	Date	22.07.2005	VSZ KOSICE	SIEMENS AG ISA TOOLS	Substation control system 6MB Function for variable operating sequences	T = /BQ 27
				Drawn	LANG				+
				Appr.					-S114 Page 27
				Norm		Orig./Repl. 1/Repl. by		Table	

Name of function: Synchronisierung Messanstoss intern

Cancel after first fulfilled rule: Yes

```
  ├─ Command step with (    , NAPATIE PRE SYNCHRONIZ., from same area)= KON
  ├─ Following block for commands/flags = 27
  ├─ Following block for operating sequence step = 27
  ├─ Flag setting step with (R110, EA01/3, SYNCHRO BEZI) = KON
  ├─ Following block for commands/flags = 30
  ├─ Following block for operating sequence step = 30
  ├─ Global jump = Sprungziel bei Befund/Abbruch
  └─ Following block for jump step = 33
├─ ELSE_IF <    >
  └─ AND <    >
     ├─ Read state from (ODPOJOVAC Q2, SCHALTZUSTAND, from same area)= zap.
     ├─ Read state from (ODPOJOVAC Q1, SCHALTZUSTAND, from same area)= vyp.
     ├─ Triggering directly with (Initiation information) = JA
     ├─ Read state from (GERAETE-STATUSMELDUNGEN, R110 EA01 SY, PORUCHA) = KON
     └─ Read state from (GERAETE-STATUSMELDUNGEN, R110 EA01 EAG/3, GA-ENDE-MARKIERUNG) = ZAC
└─ THEN <    >
  ├─ Flag setting step with (R110, EA01/3, SYNCHRO BEZI) = ZAC
  ├─ Following block for commands/flags = 1
  ├─ Following block for operating sequence step = 1
  ├─ Command step with (R110, E_W2, NAPATIE PRE SYNCHRONIZ.) = ZAC
  ├─ Following block for commands/flags = 4
  ├─ Following block for operating sequence step = 4
  ├─ Command step with (    , NAPATIE PRE SYNCHRONIZ., from same area)= ZAC
  ├─ Following block for commands/flags = 7
  ├─ Following block for operating sequence step = 7
  ├─ Delay = 11
  ├─ Following block for delay step = 10
  ├─ Command step with (Initiation information) = zap.
  ├─ Following block for synchronization command = 12
  ├─ Following block for operating sequence step = 12
  ├─ Unconditional jump = WEITER
  ├─ Following block for jump step = 15
  ├─ Label = WEITER
  ├─ Following block for label steps = 22
  ├─ Flag setting step with (R110, EA01/3, SYNCHRO NEUSPESNE) = ZAC
```

Proprietary data, company confidential. All rights reserved.
Confie a titre de secret d'entreprise. Tous droits r,serv,s.
Comunicado como segredo empresarial. Reservados todos os direitos.
Confiado como secreto industrial. Nos reservamos todos los derechos.

The reproduction, transmission or use of theis document or its is not permitted without expres written authority.
Offenders will be liable for damages. All rights, including rights created by patent grant or registration of a utility model or design, are reserved

Documentation structur: Standard
Source file: KO050722.ODA

			Date	22.07.2005	VSZ KOSICE	SIEMENS AG ISA TOOLS	Substation control system 6MB Function for variable operating sequences	T =	/BQ 28
			Drawn	LANG				+	
			Appr.					-S114	Page 28
F	Remarks	Date	Name	Norm	Orig./Repl. 1/Repl. by		Table		

Name of function: Synchronisierung Messanstoss intern

Cancel after first fulfilled rule: Yes

```
├─ Following block for commands/flags = 19
├─ Following block for operating sequence step = 19
├─ Label = Sprungziel bei Befund/Abbruch
├─ Following block for label steps = 17
├─ Command step with (R110, E_W2, NAPATIE PRE SYNCHRONIZ.) = KON
├─ Following block for commands/flags = 24
├─ Following block for operating sequence step = 24
├─ Command step with (    , NAPATIE PRE SYNCHRONIZ., from same area)= KON
├─ Following block for commands/flags = 27
├─ Following block for operating sequence step = 27
├─ Flag setting step with (R110, EA01/3, SYNCHRO BEZI) = KON
├─ Following block for commands/flags = 30
├─ Following block for operating sequence step = 30
├─ Global jump = Sprungziel bei Befund/Abbruch
└─ Following block for jump step = 33
```

Proprietary data, company confidential. All rights reserved
Confie a titre de secret d'entreprise. Tous droits r,serv,s.
Comunicado como segredo empresarial. Reservados todos os direitos.
Confiado como secreto industrial. Nos reservamos todos los derechos.

The reproduction, transmission or use of this document or its
is not permitted without expres written authority.
Offenders will be liable for damages. All rights, including rights
created by patent grant or registration of a utility model or design, are reserved

Documentation structur: Standard
Source file: KO050722.ODA

Rev.	Remarks	Date	Name	Date	22.07.2005	VSZ KOSICE	SIEMENS AG ISA TOOLS	Substation control system 6MB Function for variable operating sequences	T = /BQ 29
				Drawn	LANG				+
				Appr.					
				Norm		Orig./Repl. 1/Repl. by		Table	-S114 Page 29

Name of function: Synchronisierung mit LSA (Verteiler)

Cancel after first fulfilled rule: Yes

```
Function for variable operating sequences <Synchronisierung mit LSA (Verteiler)>
├─ IF <   >
│  └─ AND <   >
│     ├─ Read state from (GERAETE-STATUSMELDUNGEN, R110 EA01 EAG/3, GA-ENDE-MARKIERUNG) = ZAC
│     ├─ Read state from (GERAETE-STATUSMELDUNGEN, R110 EA01 SY, PORUCHA) = KON
│     └─ OR <   >
│        ├─ Triggering directly with (T201, TERC, VYPINAC Q0, SCHALTZUSTAND) = JA
│        └─ Triggering directly with (T202, TERC, VYPINAC Q0, SCHALTZUSTAND) = JA
├─ THEN <   >
│  └─ Call function of same type Synchronisierung 10KV ( Function for variable operating sequences )
├─ ELSE_IF <   >
│  └─ AND <   >
│     ├─ Triggering directly with (Initiation information) = JA
│     ├─ Read state from (GERAETE-STATUSMELDUNGEN, R110 EA01 SY, PORUCHA) = KON
│     └─ Read state from (GERAETE-STATUSMELDUNGEN, R110 EA01 EAG/3, GA-ENDE-MARKIERUNG) = ZAC
└─ THEN <   >
   └─ Call function of same type Synchronisierung 110KV ( Function for variable operating sequences )
```

Proprietary data, company confidential. All rights reserved.
Confia a tire de secret d'entreprise. Tous droits r.serv.s.
Comunicado como segredo empresarial. Reservados todos os direitos.
Confiado como secreto industrial. Nos reservamos todos los derechos.
The reproduction, transmission or use of this document or its
is not permitted without expres written authority.
Offenders will be liable for damages. All rights, including rights
created by patent grant or registration of a utility model or design, are reserved.

Documentation structur: Standard
Source file: KO050722.ODA

			Date	22.07.2005	VSZ KOSICE	SIEMENS AG ISATOOLS	Substation control system 6MB Function for variable operating sequences
			Drawn	LANG			
			Appr.				
Remarks	Date	Name	Norm		Orig./Repl. 1/Repl. by		Table

T = /BQ 30
+
-S114
Page 20

Name of function: TR Reglerarteinstellung

Cancel after first fulfilled rule: Yes

```
Function for variable operating sequences <TR Reglerarteinstellung>
├─ IF <    >
│   └─ Read state from (Initiation information) = AUTO
├─ THEN <    >
│   ├─ Flag setting step with (REGUAL, DRUH REGULACE, from same area)= AUTO
│   ├─ Following block for commands/flags = 1
│   └─ Following block for operating sequence step = 1
└─ ELSE <    >
    ├─ Flag setting step with (REGUAL, DRUH REGULACE, from same area)= RUCNE
    ├─ Following block for commands/flags = 1
    └─ Following block for operating sequence step = 1
```

Proprietary data, company confidential. All rights reserved.
Confie a titre de secret d'entreprise. Tous droits reservés.
Comunicado como segredo empresarial. Reservados todos os direitos.
Confiado como secreto industrial. Nos reservamos todos los derechos.

The reproduction, transmission or use of this document or its
is not permitted without express written authority.
Offenders will be liable for damages. All rights, including rights
created by patent grant or registration of a utility model or design, are reserved.

Documentation structur: Standard
Source file: KO050722.ODA

				Date	22.07.2005	VSZ KOSICE	SIEMENS AG ISAOOLS	Substation control system 6MB Function for variable operating sequences	T = /BQ 31	
				Drawn	LANG				+	
				Appr.					-S114	Page 31
Rev.	Remarks	Date	Name	Norm		Orig./Repl. 1/Repl. by		Table		

Name of function: TR Reglerarteinstellung T102

Cancel after first fulfilled rule: Yes

```
Function for variable operating sequences <TR Reglerarteinstellung T102>
├─ IF <    >
│   └─ Read state from (Initiation information) = AUTO
├─ THEN <    >
│   ├─ Flag setting step with (REGUAL, DRUH REGULACE, from same area)= AUTO
│   ├─ Following block for commands/flags = 1
│   └─ Following block for operating sequence step = 1
└─ ELSE <    >
    ├─ Flag setting step with (REGUAL, DRUH REGULACE, from same area)= RUCNE
    ├─ Following block for commands/flags = 1
    └─ Following block for operating sequence step = 1
```

Proprietary data, company confidential. All rights reserved.
Confie a titre de secret d'entreprise. Tous droits r,serv,s.
Comunicado como segredo empresarial. Reservados todos os direitos.
Confiado como secreto industrial. Nos reservamos todos los derechos.

The reproduction, transmission or use of this document or its
is not permitted without express written authority.
Offenders will be liable for damages. All rights, including rights
created by patent grant or registration of a utility model or design, are reserved

Documentation structur: Standard
Source file: KO050722.ODA

			Date	22.07.2005	VSZ	SIEMENS AG	Substation control system 6MB	T	= /BQ 32
			Drawn	LANG	KOSICE	ISAOOLS	Function for variable operating sequences		+
			Appr.					-S114	Page 32
P	Remarks	Date	Name	Norm	Orig./Repl. 1/Repl. by		Table		

Name of function: TR Sollwerteinstellung

Cancel after first fulfilled rule: Yes

```
Function for variable operating sequences <TR Sollwerteinstellung>
├─ IF <    >
│  └─ Read state from (Initiation information) = N0
├─ THEN <    >
│  ├─ Flag setting step with (REGUAL, STAV ZAD. HODN., from same area)= N0
│  ├─ Following block for commands/flags = 1
│  └─ Following block for operating sequence step = 1
├─ ELSE_IF <    >
│  └─ Read state from (Initiation information) = N1
├─ THEN <    >
│  ├─ Flag setting step with (REGUAL, STAV ZAD. HODN., from same area)= N1
│  ├─ Following block for commands/flags = 1
│  └─ Following block for operating sequence step = 1
├─ ELSE_IF <    >
│  └─ Read state from (Initiation information) = N2
├─ THEN <    >
│  ├─ Flag setting step with (REGUAL, STAV ZAD. HODN., from same area)= N2
│  ├─ Following block for commands/flags = 1
│  └─ Following block for operating sequence step = 1
├─ ELSE_IF <    >
│  └─ Read state from (Initiation information) = N3
├─ THEN <    >
│  ├─ Flag setting step with (REGUAL, STAV ZAD. HODN., from same area)= N3
│  ├─ Following block for commands/flags = 1
│  └─ Following block for operating sequence step = 1
├─ ELSE_IF <    >
│  └─ Read state from (Initiation information) = S0
├─ THEN <    >
│  ├─ Flag setting step with (REGUAL, STAV ZAD. HODN., from same area)= S0
│  ├─ Following block for commands/flags = 1
│  └─ Following block for operating sequence step = 1
├─ ELSE_IF <    >
│  └─ Read state from (Initiation information) = S1
├─ THEN <    >
│  ├─ Flag setting step with (REGUAL, STAV ZAD. HODN., from same area)= S1
```

Proprietary data, company confidential. All rights reserved.
Confie a titre de secret d'entreprise. Tous droits r,serv,s.
Comunicado como segredo empresarial. Reservados todos os direitos.
Confiado como secreto industrial. Nos reservamos todos los derechos.

The reproduction, transmission or use of this document or its is not permitted without express written authority.
Offenders will be liable for damages. All rights, including rights created by patent grant or registration of a utility model or design, are reserved

Documentation structur: Standard
Source file: KO050722.ODA

Rev.	Remarks	Date	Name	Date	22.07.2005	VSZ KOSICE	SIEMENS AG ISAOOLS	Substation control system 6MB Function for variable operating sequences	T = /BQ 33
				Drawn	LANG				+
				Appr.					
				Norm		Orig./Repl. 1/Repl. by		Table	-S114 Page 33

Name of function: TR Sollwerteinstellung

Cancel after first fulfilled rule: Yes

```
  ├─ Following block for commands/flags = 1
  └─ Following block for operating sequence step = 1
├─ ELSE_IF <   >
  └─ Read state from (Initiation information) = S2
├─ THEN <   >
  ├─ Flag setting step with (REGUAL, STAV ZAD. HODN., from same area)= S2
  ├─ Following block for commands/flags = 1
  └─ Following block for operating sequence step = 1
├─ ELSE_IF <   >
  └─ Read state from (Initiation information) = S3
├─ THEN <   >
  ├─ Flag setting step with (REGUAL, STAV ZAD. HODN., from same area)= S3
  ├─ Following block for commands/flags = 1
  └─ Following block for operating sequence step = 1
└─ ELSE <   >
  ├─ Flag setting step with (REGUAL, STAV ZAD. HODN., from same area)= N1
  ├─ Following block for commands/flags = 1
  └─ Following block for operating sequence step = 1
```

The reproduction, transmission or use of this document or its contents is not permitted without express written authority. Offenders will be liable for damages. All rights, including rights created by patent grant or registration of a utility model or design, are reserved.
Proprietary data, company confidential. All rights reserved. Confie a tifre de secret d'entreprise. Tous droits réservés. Comunicado como segredo empresarial. Reservados todos os direitos. Confiado como secreto industrial. Nos reservamos todos los derechos.

Documentation structur: Standard
Source file: KO050722.ODA

			Date	22.07.2005	VSZ KOSICE	SIEMENS AG ISA TOOLS	Substation control system 6MB Function for variable operating sequences
			Drawn	LANG			
			Appr.				Table
F	Remarks	Date	Name	Norm	Orig./Repl. 1/Repl. by		

T = /BQ 34
+
-S114
Page 34

Name of function: TR Sollwerteinstellung 102

Cancel after first fulfilled rule: Yes

```
Function for variable operating sequences <TR Sollwerteinstellung 102>
 ├─ IF <    >
 │   └─ Read state from (Initiation information) = N0
 ├─ THEN <    >
 │   ├─ Flag setting step with (REGUAL, STAV ZAD. HODN., from same area)= N0
 │   ├─ Following block for commands/flags = 1
 │   └─ Following block for operating sequence step = 1
 ├─ ELSE_IF <    >
 │   └─ Read state from (Initiation information) = N1
 ├─ THEN <    >
 │   ├─ Flag setting step with (REGUAL, STAV ZAD. HODN., from same area)= N1
 │   ├─ Following block for commands/flags = 1
 │   └─ Following block for operating sequence step = 1
 ├─ ELSE_IF <    >
 │   └─ Read state from (Initiation information) = N2
 ├─ THEN <    >
 │   ├─ Flag setting step with (REGUAL, STAV ZAD. HODN., from same area)= N2
 │   ├─ Following block for commands/flags = 1
 │   └─ Following block for operating sequence step = 1
 ├─ ELSE_IF <    >
 │   └─ Read state from (Initiation information) = N3
 ├─ THEN <    >
 │   ├─ Flag setting step with (REGUAL, STAV ZAD. HODN., from same area)= N3
 │   ├─ Following block for commands/flags = 1
 │   └─ Following block for operating sequence step = 1
 ├─ ELSE_IF <    >
 │   └─ Read state from (Initiation information) = S0
 ├─ THEN <    >
 │   ├─ Flag setting step with (REGUAL, STAV ZAD. HODN., from same area)= S0
 │   ├─ Following block for commands/flags = 1
 │   └─ Following block for operating sequence step = 1
 ├─ ELSE_IF <    >
 │   └─ Read state from (Initiation information) = S1
 ├─ THEN <    >
 │   ├─ Flag setting step with (REGUAL, STAV ZAD. HODN., from same area)= S1
```

Proprietary data, company confidential. All rights reserved
Confia a ltiva de secret de empresa. Tots drets reservats.
Comunicado como segredo empresarial. Reservados os direitos.
Comunicado como secreto industrial. Nos reservamos todos los derechos.
The reproduction, transmission or use of this document or its
is not permitted without express written authority.
Offenders will be liable for damages. All rights, including rights
created by patent grant or registration of a utility model or design, are reserved

Documentation structur: Standard
Source file: KO050722.ODA

				Date	22.07.2005	VSZ KOSICE	SIEMENS AG ISATOOLS	Substation control system 6MB Function for variable operating sequences	T = /BQ 35
				Drawn	LANG				+
				Appr.					-S114 Page 35
Rev.	Remarks	Date	Name	Norm		Orig./Repl. 1/Repl. by		Table	

Name of function: TR Sollwerteinstellung 102

Cancel after first fulfilled rule: Yes

```
  ├─ Following block for commands/flags = 1
  └─ Following block for operating sequence step = 1
├─ ELSE_IF <   >
  └─ Read state from (Initiation information) = S2
├─ THEN <   >
  ├─ Flag setting step with (REGUAL, STAV ZAD. HODN., from same area)= S2
  ├─ Following block for commands/flags = 1
  └─ Following block for operating sequence step = 1
├─ ELSE_IF <   >
  └─ Read state from (Initiation information) = S3
├─ THEN <   >
  ├─ Flag setting step with (REGUAL, STAV ZAD. HODN., from same area)= S3
  ├─ Following block for commands/flags = 1
  └─ Following block for operating sequence step = 1
└─ ELSE <   >
  ├─ Flag setting step with (REGUAL, STAV ZAD. HODN., from same area)= N1
  ├─ Following block for commands/flags = 1
  └─ Following block for operating sequence step = 1
```

The reproduction, transmission or use of this document or its contents is not permitted without express written authority. Offenders will be liable for damages. All rights, including rights created by patent grant or registration of a utility model or design, are reserved.
Proprietary data, company confidential. All rights reserved. Confie a tiee de secret d'entreprise. Tous droits reservés. Comunicado como segredo empresarial. Reservados todos os direitos. Confiado como secreto industrial. Nos reservamos todos los derechos.

Documentation structur: Standard
Source file: KO050722.ODA

			Date	22.07.2005	VSZ KOSICE	SIEMENS AG ISA TOOLS	Substation control system 6MB Function for variable operating sequences	T = /BQ 36	
			Drawn	LANG				+	
			Appr.					-S114	Page 36
P	Remarks	Date	Name	Norm	Orig./Repl. 1/Repl. by		Table		

Name of function: Trafostufung

Cancel after first fulfilled rule: Yes

```
Function for variable operating sequences <Trafostufung>
├─ IF <    >
│   └─ Triggering directly with (Initiation information) = JA
└─ THEN <    >
    ├─ Command step with (Initiation information) = zap.
    ├─ Following block for commands/flags = 1
    ├─ Following block for operating sequence step = 1
    ├─ Command step with (TRAFO, ODBOCKA ST.C., from same area)= zap.
    ├─ Following block for commands/flags = 4
    └─ Following block for operating sequence step = 4
```

Proprietary data, company confidential. All rights reserved
Confie a titre de secret d'entreprise. Tous droits reservés
Comunicado como segredo empresarial. Reservados todos os direitos
Confiado como secreto industrial. Nos reservamos todos los derechos
The reproduction, transmission or use of this document or its
is not permitted without express written authority.
Offenders will be liable for damages. All rights, including rights
created by patent grant or registration of a utility model or design, are reserved

Documentation structur: Standard
Source file: KO050722.ODA

				Date	22.07.2005	VSZ KOSICE	SIEMENS AG ISATOOLS	Substation control system 6MB Function for variable operating sequences	T = /BQ 37
				Drawn	LANG				+
				Appr.					-S114 Page 37
Rev.	Remarks	Date	Name	Norm		Orig./Repl. 1/Repl. by		Table	

Name of function: BE 01 Ü-Bild Leistungs.Trenner 20/110kV

Cancel after first fulfilled rule: Yes

```
Function for diagram display <BE 01 Ü-Bild Leistungs.Trenner 20/110kV>
 ├─ IF <    >
 │   └─ AND <    >
 │       ├─ Read state from (    , GA-ENDE-MARKIERUNG, from the area of the acquisition unit) = ZAC
 │       ├─ Read state from (Initiation information) = zap.
 │       └─ Read state from (    , ZABLOKOVANI POLE, from same area)= ZAC
 ├─ THEN <    >
 │   └─ Output of a display attribute alternative = 12
 ├─ ELSE_IF <    >
 │   └─ AND <    >
 │       ├─ Read state from (    , GA-ENDE-MARKIERUNG, from the area of the acquisition unit) = ZAC
 │       ├─ Read state from (Initiation information) = vyp.
 │       └─ Read state from (    , ZABLOKOVANI POLE, from same area)= ZAC
 ├─ THEN <    >
 │   └─ Output of a display attribute alternative = 13
 ├─ ELSE_IF <    >
 │   └─ AND <    >
 │       ├─ Read state from (    , GA-ENDE-MARKIERUNG, from the area of the acquisition unit) = ZAC
 │       ├─ Read state from (Initiation information) = POR.
 │       └─ Read state from (    , ZABLOKOVANI POLE, from same area)= ZAC
 ├─ THEN <    >
 │   └─ Output of a display attribute alternative = 14
 ├─ ELSE_IF <    >
 │   └─ AND <    >
 │       ├─ Read state from (    , GA-ENDE-MARKIERUNG, from the area of the acquisition unit) = ZAC
 │       └─ Read state from (Initiation information) = zap.
 ├─ THEN <    >
 │   └─ Output of a display attribute alternative = 3
 ├─ ELSE_IF <    >
 │   └─ AND <    >
 │       ├─ Read state from (    , GA-ENDE-MARKIERUNG, from the area of the acquisition unit) = ZAC
 │       └─ Read state from (Initiation information) = vyp.
 ├─ THEN <    >
 │   └─ Output of a display attribute alternative = 4
 ├─ ELSE_IF <    >
```

Proprietary data, company confidential. All rights reserved.
Confia a tire de secret d'entreprise. Tous droits réservés.
Comunicado como segredo empresarial. Reservados todos os direitos.
Confiado como secreto industrial. Nos reservamos todos los derechos.
The reproduction, transmission or use of this document or its contents is not permitted without express written authority. Offenders will be liable for damages. All rights, including rights created by patent grant or registration of a utility model or design, are reserved.

Name of function: BE 01 Ü-Bild Leistungs.Trenner 20/110kV

Cancel after first fulfilled rule: Yes

```
│  └─ AND <    >
│     ├─ Read state from (    , GA-ENDE-MARKIERUNG, from the area of the acquisition unit) = ZAC
│     └─ Read state from (Initiation information) = POR.
├─ THEN <    >
│  └─ Output of a display attribute alternative = 5
├─ ELSE_IF <BE 2 W7 EIN-Stellung - EAG gestört>
│  └─ Read state from (Initiation information) = zap.
├─ THEN <BE 2 D7 EIN-Stellung - EAG gestört>
│  └─ Output of a display attribute alternative = 9
├─ ELSE_IF <BE 2 W8 AUS-Stellung - EAG gestört>
│  └─ Read state from (Initiation information) = vyp.
├─ THEN <BE 2 D8 AUS-Stellung - EAG gestört>
│  └─ Output of a display attribute alternative = 10
├─ ELSE_IF <BE 2 W9 STOER-Stellung - EAG gestört>
│  └─ Read state from (Initiation information) = POR.
└─ THEN <BE 2 D9 STOER-Stellung - EAG gestört>
   └─ Output of a display attribute alternative = 11
```

The reproduction, transmission or use of this document or its contents is not permitted without express written authority. Offenders will be liable for damages. All rights, including rights created by patent grant or registration of a utility model or design, are reserved. Proprietary data, company confidential. All rights reserved. Confie a titre de secret d'entreprise. Tous droits réservés. Comunicado como segredo empresarial. Reservados todos os direitos. Confiado como secreto industrial. Nos reservamos todos los derechos.

Documentation structur: Standard
Source file: KO050722.ODA

Rev.	Remarks	Date	Name	Date	22.07.2005	VSZ KOSICE	SIEMENS AG ISAOOLS	Substation control system 6MB Function for diagram display	T = /BR 2
				Drawn	LANG				+
				Appr.					-S115 Page 2
				Norm		Orig./Repl. 1/Repl. by		Table	

Name of function: BE 02 Schalter 20/110/220kV

Cancel after first fulfilled rule: Yes

```
Function for diagram display <BE 02 Schalter 20/110/220kV>
 ├─ IF <    >
 │   └─ AND <    >
 │       ├─ Read state from (    , GA-ENDE-MARKIERUNG, from the area of the acquisition unit) = ZAC
 │       ├─ Read state from (Initiation information) = zap.
 │       └─ Read state from (    , ZABLOKOVANI POLE, from same area)= ZAC
 ├─ THEN <    >
 │   └─ Output of a display attribute alternative = 12
 ├─ ELSE_IF <    >
 │   └─ AND <    >
 │       ├─ Read state from (    , GA-ENDE-MARKIERUNG, from the area of the acquisition unit) = ZAC
 │       ├─ Read state from (Initiation information) = vyp.
 │       └─ Read state from (    , ZABLOKOVANI POLE, from same area)= ZAC
 ├─ THEN <    >
 │   └─ Output of a display attribute alternative = 13
 ├─ ELSE_IF <    >
 │   └─ AND <    >
 │       ├─ Read state from (    , GA-ENDE-MARKIERUNG, from the area of the acquisition unit) = ZAC
 │       ├─ Read state from (Initiation information) = POR.
 │       └─ Read state from (    , ZABLOKOVANI POLE, from same area)= ZAC
 ├─ THEN <    >
 │   └─ Output of a display attribute alternative = 14
 ├─ ELSE_IF <BE 2 W1 EIN-Stellung - blinkend>
 │   └─ AND <GA-Ende UND (SOBL ODER (Zust LS UND ZUWE>
 │       ├─ Read state from (    , GA-ENDE-MARKIERUNG, from the area of the acquisition unit) = ZAC
 │       └─ OR <SOBL ODER (Zust LS UND ZUWE)>
 │           ├─ Switching direction of setpoint blinking from (Initiation information) = zap.
 │           └─ AND <Zust LS UND ZUWE>
 │               ├─ Read state from (Initiation information) = zap.
 │               └─ State change from (Initiation information) = NICHT QUITTIERT
 ├─ THEN <BE 2 D1 EIN-Stellung - blinkend>
 │   └─ Output of a display attribute alternative = 6
 ├─ ELSE_IF <BE 2 W2 AUS-Stellung - blinkend>
 │   └─ AND <GA-Ende UND (SOBL ODER (Zust LS UND ZUWE>
 │       ├─ Read state from (    , GA-ENDE-MARKIERUNG, from the area of the acquisition unit) = ZAC
```

Proprietary data, company confidential. All rights reserved.
Confie a titre de secret d'entreprise. Tous droits reservés.
Comunicado como segredo empresarial. Reservados todos os direitos.
Confiado como secreto industrial. Nos reservamos todos los derechos.
The reproduction, transmission or use of this document or its
is not permitted without expres written authority.
Offenders will be liable for damages. All rights, including rights
created by patent grant or registration of a utility model or design, are reserved.

Documentation structur: Standard
Source file: KO050722.ODA

			Date	22.07.2005	VSZ KOSICE	SIEMENS AG ISAOOLS	Substation control system 6MB Function for diagram display
			Drawn	LANG			
			Appr.				
Remarks	Date	Name	Norm		Orig./Repl. 1/Repl. by		Table

T = /BR 3
+
-S115 Page 3

Name of function: BE 02 Schalter 20/110/220kV

Cancel after first fulfilled rule: Yes

```
    └─ OR <SOBL ODER (Zust LS UND ZUWE)>
        ├─ Switching direction of setpoint blinking from (Initiation information) = vyp.
        └─ AND <Zust LS UND ZUWE>
            ├─ Read state from (Initiation information) = vyp.
            └─ State change from (Initiation information) = NICHT QUITTIERT
├─ THEN <BE 2 D2 AUS-Stellung - blinkend>
│  └─ Output of a display attribute alternative = 7
├─ ELSE_IF <BE 2 W3 EIN-Stellung>
│  └─ AND <GA-Ende UND Zust LS UND ZUWE>
│     ├─ Read state from (    , GA-ENDE-MARKIERUNG, from the area of the acquisition unit) = ZAC
│     ├─ Read state from (Initiation information) = zap.
│     └─ State change from (Initiation information) = QUITTIERT
├─ THEN <BE 2 D3 EIN-Stellung>
│  └─ Output of a display attribute alternative = 3
├─ ELSE_IF <BE 2 W4 AUS-Stellung>
│  └─ AND <GA-Ende UND Zust LS UND ZUWE>
│     ├─ Read state from (    , GA-ENDE-MARKIERUNG, from the area of the acquisition unit) = ZAC
│     ├─ Read state from (Initiation information) = vyp.
│     └─ State change from (Initiation information) = QUITTIERT
├─ THEN <BE 2 D4 AUS-Stellung>
│  └─ Output of a display attribute alternative = 4
├─ ELSE_IF <BE 2 W5 STOER-Stellung>
│  └─ AND <GA-Ende UND Zust LS UND ZUWE>
│     ├─ Read state from (    , GA-ENDE-MARKIERUNG, from the area of the acquisition unit) = ZAC
│     ├─ Read state from (Initiation information) = POR.
│     └─ State change from (Initiation information) = QUITTIERT
├─ THEN <BE 2 D5 STOER-Stellung>
│  └─ Output of a display attribute alternative = 5
├─ ELSE_IF <BE 2 W6 STOER-Stellung - blinkend>
│  └─ AND <GA-Ende UND Zust LS UND ZUWE>
│     ├─ Read state from (    , GA-ENDE-MARKIERUNG, from the area of the acquisition unit) = ZAC
│     ├─ Read state from (Initiation information) = POR.
│     └─ State change from (Initiation information) = NICHT QUITTIERT
├─ THEN <BE 2 D6 STOER-Stellung - blinkend>
│  └─ Output of a display attribute alternative = 8
```

Proprietary data, company confidential. All rights reserved.
Confie a titre de secret d'entreprise. Tous droits reservés.
Comunicado como segredo empresarial. Reservados todos os direitos.
Confiado como secreto industrial. Nos reservamos todos los derechos.

The reproduction, transmission or use of this document or its is not permitted without express written authority.
Offenders will be liable for damages. All rights, including rights created by patent grant or registration of a utility model or design, are reserved

Documentation structur: Standard
Source file: KO050722.ODA

Rev.	Remarks	Date	Name	Date	22.07.2005	VSZ KOSICE	SIEMENS AG ISAIOOLS	Substation control system 6MB Function for diagram display	T = /BR 4 +
				Drawn	LANG				
				Appr.					-S115 Page 4
				Norm		Orig./Repl. 1/Repl. by		Table	

Name of function: BE 02 Schalter 20/110/220kV

Cancel after first fulfilled rule: Yes

```
├─ ELSE_IF <BE 2 W7 EIN-Stellung - EAG gestört>
│  └─ Read state from (Initiation information) = zap.
├─ THEN <BE 2 D7 EIN-Stellung - EAG gestört>
│  └─ Output of a display attribute alternative = 9
├─ ELSE_IF <BE 2 W8 AUS-Stellung - EAG gestört>
│  └─ Read state from (Initiation information) = vyp.
├─ THEN <BE 2 D8 AUS-Stellung - EAG gestört>
│  └─ Output of a display attribute alternative = 10
├─ ELSE_IF <BE 2 W9 STOER-Stellung - EAG gestört>
│  └─ Read state from (Initiation information) = POR.
└─ THEN <BE 2 D9 STOER-Stellung - EAG gestört>
   └─ Output of a display attribute alternative = 11
```

Proprietary data, company confidential. All rights reserved.
Confia a titre de secret d'entreprise. Tous droits réservés.
Comunicado como segredo empresarial. Reservados todos os direitos.
Confiado como secreto industrial. Nos reservamos todos los derechos.

The reproduction, transmission or use of this document or its is not permitted without express written authority.
Offenders will be liable for damages. All rights, including rights created by patent grant or registration of a utility model or design, are reserved.

Documentation structur: Standard
Source file: KO050722.ODA

			Date	22.07.2005	VSZ KOSICE	SIEMENS AG ISA TOOLS	Substation control system 6MB Function for diagram display	T =	/BR 5
			Drawn	LANG				+	
			Appr.					-S115	Page
F	Remarks	Date	Name	Norm	Orig./Repl. 1/Repl. by		Table		

Name of function: BE 08 Meßwert

Cancel after first fulfilled rule: Yes

```
Function for diagram display <BE 08 Meßwert>
├─ IF <BE 8 W1 Gültig>
│  └─ AND <GA-Ende UND MW-Status>
│     ├─ Read state from (    , GA-ENDE-MARKIERUNG, from the area of the acquisition unit) = ZAC
│     └─ Read analog/metered value status from (Initiation information) = GÜLTIG
├─ THEN <BE 8 D1 Gültig>
│  └─ Output of a display attribute alternative = 3
├─ ELSE_IF <BE 8 W2 Ungültig>
│  └─ AND <GA-Ende UND (MW-Status ODER MW-Status)>
│     ├─ Read state from (    , GA-ENDE-MARKIERUNG, from the area of the acquisition unit) = ZAC
│     └─ OR <MW ungültig ODER MW ungültig mit Überl.>
│        ├─ Read analog/metered value status from (Initiation information) = UNGÜLTIG
│        └─ Read analog/metered value status from (Initiation information) = UNGÜLTIG MIT ÜBERLAUF
├─ THEN <BE 8 D2 Ungültig>
│  └─ Output of a display attribute alternative = 4
├─ ELSE_IF <BE 8 W3 Überlauf>
│  └─ AND <GA-Ende UND (Status OR Status OR Status)>
│     ├─ Read state from (    , GA-ENDE-MARKIERUNG, from the area of the acquisition unit) = ZAC
│     └─ OR <Überl OR Überl mit OG1 OR Überl mitOG1+2>
│        ├─ Read analog/metered value status from (Initiation information) = ÜBERLAUF
│        ├─ Read analog/metered value status from (Initiation information) = ÜBERLAUF MIT OBERGRENZE 1
│        └─ Read analog/metered value status from (Initiation information) = ÜBERLAUF MIT OBERGRENZE 1 UND 2
├─ THEN <BE 8 D3 Überlauf>
│  └─ Output of a display attribute alternative = 5
├─ ELSE_IF <BE 8 W5 Obergrenze 2>
│  └─ AND <GA-Ende UND MW-Status>
│     ├─ Read state from (    , GA-ENDE-MARKIERUNG, from the area of the acquisition unit) = ZAC
│     └─ Read analog/metered value status from (Initiation information) = OBERGRENZE 1 UND 2
├─ THEN <BE 8 D5 Obergrenze 2>
│  └─ Output of a display attribute alternative = 9
├─ ELSE_IF <BE 8 W4 Obergrenze>
│  └─ AND <GA-Ende UND MW-Status>
│     ├─ Read state from (    , GA-ENDE-MARKIERUNG, from the area of the acquisition unit) = ZAC
│     └─ Read analog/metered value status from (Initiation information) = OBERGRENZE 1
├─ THEN <BE 8 D4 Obergrenze>
```

Proprietary data, company confidential. All rights reserved.
Confie a titre de secret d'entreprise. Tous droits r,serv,s.
Comunicado como segredo empresarial. Reservados todos os direitos.
Confiado como secreto industrial. Nos reservamos todos los derechos.

The reproduction, transmission or use of theis document or its is not permitted without expres written authority. Offenders will be liable for damages. All rights, including rights created by patent grant or registration of a utility model or design, are reserved

Documentation structur: Standard
Source file: KO050722.ODA

Rev.	Remarks	Date	Name	Date	22.07.2005	VSZ KOSICE	SIEMENS AG ISA TOOLS	Substation control system 6MB Function for diagram display	T = /BR 6
				Drawn	LANG				+
				Appr.					-S115 Page 6
				Norm		Orig./Repl. 1/Repl. by		Table	

Name of function: BE 08 Meßwert

Cancel after first fulfilled rule: Yes

```
│  └─ Output of a display attribute alternative = 6
├─ ELSE_IF <BE 8 W6 Untergrenze>
│  └─ AND <GA-Ende UND (MW-Status ODER MW-Status)>
│     ├─ Read state from (    , GA-ENDE-MARKIERUNG, from the area of the acquisition unit) = ZAC
│     └─ OR <MW UG1 unterschr. OR MW UG1+2 unterschr.>
│        ├─ Read analog/metered value status from (Initiation information) = UNTERGRENZE 1
│        └─ Read analog/metered value status from (Initiation information) = UNTERGRENZE 1 UND 2
├─ THEN <BE 8 D6 Untergrenze>
│  └─ Output of a display attribute alternative = 7
├─ ELSE_IF <BE 8 W7 Nicht aktualisiert>
│  └─ Read state from (    , GA-ENDE-MARKIERUNG, from the area of the acquisition unit) = KON
└─ THEN <BE 8 D7 Nicht aktualisiert>
   └─ Output of a display attribute alternative = 8
```

The reproduction, transmission or use of this document or its is not permitted without express written authority. Offenders will be liable for damages. All rights, including rights created by patent grant or registration of a utility model or design, are reserved. Proprietary data, company confidential. All rights reserved. Confie a titre de secret d'entreprise. Tous droits réservés. Comunicado como segredo empresarial. Reservados todos os direitos. Confiado como secreto industrial. Nos reservamos todos los derechos.

Documentation structur: Standard
Source file: KO050722.ODA

			Date	22.07.2005	VSZ KOSICE	SIEMENS AG ISA TOOLS	Substation control system 6MB Function for diagram display	T =	/BR 7
			Drawn	LANG				+	
			Appr.					-S115	Page 7
F	Remarks	Date	Name	Norm	Orig./Repl. 1/Repl. by		Table		

Name of function: BE 11 Stufenstellung

Cancel after first fulfilled rule: Yes

```
Function for diagram display <BE 11 Stufenstellung>
 ├─ IF <BE 11 W1 EAG gestoert>
 │   └─ Read state from (    , GA-ENDE-MARKIERUNG, from the area of the acquisition unit) = KON
 ├─ THEN <BE 11 D1 EAG AUS Stufe 00>
 │   └─ Output of a display attribute alternative = 22
 ├─ ELSE_IF <    >
 │   └─ AND <    >
 │       ├─ Switching direction of setpoint blinking from (TRAFO, ODBOCKA VO FAZE, from same area)= KON
 │       └─ Read state from (TRAFO, ODBOCKA ST.C., from same area)= 02
 ├─ THEN <BE 11 D1 EAG AUS Stufe 00>
 │   └─ Output of a display attribute alternative = 24
 ├─ ELSE_IF <    >
 │   └─ OR <    >
 │       ├─ AND <    >
 │       │   ├─ Switching direction of setpoint blinking from (TRAFO, ODBOCKA VO FAZE, from same area)= ZAC
 │       │   └─ Read state from (TRAFO, ODBOCKA ST.C., from same area)= 17
 │       └─ AND <    >
 │           ├─ Switching direction of setpoint blinking from (TRAFO, ODBOCKA VO FAZE, from same area)= KON
 │           └─ Read state from (TRAFO, ODBOCKA ST.C., from same area)= 03
 ├─ THEN <    >
 │   └─ Output of a display attribute alternative = 25
 ├─ ELSE_IF <    >
 │   └─ OR <    >
 │       ├─ AND <    >
 │       │   ├─ Switching direction of setpoint blinking from (TRAFO, ODBOCKA VO FAZE, from same area)= ZAC
 │       │   └─ Read state from (TRAFO, ODBOCKA ST.C., from same area)= 02
 │       └─ AND <    >
 │           ├─ Switching direction of setpoint blinking from (TRAFO, ODBOCKA VO FAZE, from same area)= KON
 │           └─ Read state from (TRAFO, ODBOCKA ST.C., from same area)= 04
 ├─ THEN <    >
 │   └─ Output of a display attribute alternative = 26
 ├─ ELSE_IF <    >
 │   └─ OR <    >
 │       ├─ AND <    >
 │       │   ├─ Switching direction of setpoint blinking from (TRAFO, ODBOCKA VO FAZE, from same area)= ZAC
```

Proprietary data, company confidential. All rights reserved.
Confidential and secret document. Tous droits réservés.
Comunicado como segredo empresarial. Reservados todos os direitos.
Confidencial como secreto industrial. Nos reservamos todos los derechos.
The reproduction, transmission or use of this document or its contents is not permitted without express written authority. Offenders will be liable for damages. All rights, including rights created by patent grant or registration of a utility model or design, are reserved.

Documentation structure: Standard
Source file: KO050722.ODA

Rev.	Remarks	Date	Name	Norm	Date 22.07.2005	Drawn LANG	Appr.	Orig./Repl. 1/Repl. by

VSZ KOSICE

SIEMENS AG ISATOOLS

Substation control system 6MB
Function for diagram display
Table

T = /BR 8
+
-S115
Page 8

Name of function: BE 11 Stufenstellung

Cancel after first fulfilled rule: Yes

```
        └ Read state from (TRAFO, ODBOCKA ST.C., from same area)= 03
      AND <    >
        ├ Switching direction of setpoint blinking from (TRAFO, ODBOCKA VO FAZE, from same area)= KON
        └ Read state from (TRAFO, ODBOCKA ST.C., from same area)= 05
THEN <    >
  └ Output of a display attribute alternative = 27
ELSE_IF <    >
  └ OR <    >
      AND <    >
        ├ Switching direction of setpoint blinking from (TRAFO, ODBOCKA VO FAZE, from same area)= ZAC
        └ Read state from (TRAFO, ODBOCKA ST.C., from same area)= 04
      AND <    >
        ├ Switching direction of setpoint blinking from (TRAFO, ODBOCKA VO FAZE, from same area)= KON
        └ Read state from (TRAFO, ODBOCKA ST.C., from same area)= 06
THEN <    >
  └ Output of a display attribute alternative = 28
ELSE_IF <    >
  └ OR <    >
      AND <    >
        ├ Switching direction of setpoint blinking from (TRAFO, ODBOCKA VO FAZE, from same area)= ZAC
        └ Read state from (TRAFO, ODBOCKA ST.C., from same area)= 05
      AND <    >
        ├ Switching direction of setpoint blinking from (TRAFO, ODBOCKA VO FAZE, from same area)= KON
        └ Read state from (TRAFO, ODBOCKA ST.C., from same area)= 07
THEN <BE 11 D2 Stufe 01>
  └ Output of a display attribute alternative = 29
ELSE_IF <    >
  └ OR <    >
      AND <    >
        ├ Switching direction of setpoint blinking from (TRAFO, ODBOCKA VO FAZE, from same area)= ZAC
        └ Read state from (TRAFO, ODBOCKA ST.C., from same area)= 06
      AND <    >
        ├ Switching direction of setpoint blinking from (TRAFO, ODBOCKA VO FAZE, from same area)= KON
        └ Read state from (TRAFO, ODBOCKA ST.C., from same area)= 08
THEN <BE 11 D2 Stufe 01>
```

Proprietary data, company confidential. All rights reserved.
Confie a ltre da secret d'entreprise. Tous droits r serv s.
Comunicado como segredo empresarial. Reservados todos os direitos.
Confiado como secreto industrial. Nos reservamos todos los derechos.
The reproduction, transmission or use of this document or its
is not permitted without expres written authority.
Offenders will be liable for damages. All rights, including rights
created by patent grant or registration of a utility model or design, are reserved.

Documentation structur: Standard
Source file: KO050722.ODA

			Date	22.07.2005	VSZ KOSICE	SIEMENS AG ISATOOLS	Substation control system 6MB Function for diagram display
			Drawn	LANG			
			Appr.				
Remarks	Date	Name	Norm		Orig./Repl. 1/Repl. by		Table

T = /BR 9
+
-S115
Page

Name of function: BE 11 Stufenstellung

Cancel after first fulfilled rule: Yes

```
    └─ Output of a display attribute alternative = 30
  ├─ ELSE_IF <   >
    └─ OR <   >
      ├─ AND <   >
      │  ├─ Switching direction of setpoint blinking from (TRAFO, ODBOCKA VO FAZE, from same area)= ZAC
      │  └─ Read state from (TRAFO, ODBOCKA ST.C., from same area)= 07
      └─ AND <   >
         ├─ Switching direction of setpoint blinking from (TRAFO, ODBOCKA VO FAZE, from same area)= KON
         └─ Read state from (TRAFO, ODBOCKA ST.C., from same area)= 09
  ├─ THEN <BE 11 D2 Stufe 01>
    └─ Output of a display attribute alternative = 31
  ├─ ELSE_IF <   >
    └─ OR <   >
      ├─ AND <   >
      │  ├─ Switching direction of setpoint blinking from (TRAFO, ODBOCKA VO FAZE, from same area)= ZAC
      │  └─ Read state from (TRAFO, ODBOCKA ST.C., from same area)= 08
      └─ AND <   >
         ├─ Switching direction of setpoint blinking from (TRAFO, ODBOCKA VO FAZE, from same area)= KON
         └─ Read state from (TRAFO, ODBOCKA ST.C., from same area)= 10
  ├─ THEN <BE 11 D2 Stufe 01>
    └─ Output of a display attribute alternative = 32
  ├─ ELSE_IF <   >
    └─ OR <   >
      ├─ AND <   >
      │  ├─ Switching direction of setpoint blinking from (TRAFO, ODBOCKA VO FAZE, from same area)= ZAC
      │  └─ Read state from (TRAFO, ODBOCKA ST.C., from same area)= 09
      └─ AND <   >
         ├─ Switching direction of setpoint blinking from (TRAFO, ODBOCKA VO FAZE, from same area)= KON
         └─ Read state from (TRAFO, ODBOCKA ST.C., from same area)= 11
  ├─ THEN <BE 11 D2 Stufe 01>
    └─ Output of a display attribute alternative = 33
  ├─ ELSE_IF <   >
    └─ OR <   >
      ├─ AND <   >
      │  ├─ Switching direction of setpoint blinking from (TRAFO, ODBOCKA VO FAZE, from same area)= ZAC
```

Proprietary data, company confidential. All rights reserved.
Confia a tire de secret d'entreprise. Tous droits reservs.
Comunicado como segredo empresarial. Reservados todos os direitos.
Confiado como secreto industrial. Nos reservamos todos los derechos.

The reproduction, transmission or use of this document or its contents is not permitted without expres written authority. Offenders will be liable for damages. All rights, including rights created by patent grant or registration of a utility model or design, are reserved

Name of function: BE 11 Stufenstellung

Cancel after first fulfilled rule: Yes

```
        │   └─ Read state from (TRAFO, ODBOCKA ST.C., from same area)= 10
        └─ AND <    >
            ├─ Switching direction of setpoint blinking from (TRAFO, ODBOCKA VO FAZE, from same area)= KON
            └─ Read state from (TRAFO, ODBOCKA ST.C., from same area)= 12
├─ THEN <BE 11 D2 Stufe 01>
│  └─ Output of a display attribute alternative = 34
├─ ELSE_IF <    >
│  └─ OR <    >
│     ├─ AND <    >
│     │  ├─ Switching direction of setpoint blinking from (TRAFO, ODBOCKA VO FAZE, from same area)= ZAC
│     │  └─ Read state from (TRAFO, ODBOCKA ST.C., from same area)= 11
│     └─ AND <    >
│        ├─ Switching direction of setpoint blinking from (TRAFO, ODBOCKA VO FAZE, from same area)= KON
│        └─ Read state from (TRAFO, ODBOCKA ST.C., from same area)= 13
├─ THEN <BE 11 D2 Stufe 01>
│  └─ Output of a display attribute alternative = 35
├─ ELSE_IF <    >
│  └─ OR <    >
│     ├─ AND <    >
│     │  ├─ Switching direction of setpoint blinking from (TRAFO, ODBOCKA VO FAZE, from same area)= ZAC
│     │  └─ Read state from (TRAFO, ODBOCKA ST.C., from same area)= 12
│     └─ AND <    >
│        ├─ Switching direction of setpoint blinking from (TRAFO, ODBOCKA VO FAZE, from same area)= KON
│        └─ Read state from (TRAFO, ODBOCKA ST.C., from same area)= 14
├─ THEN <BE 11 D2 Stufe 01>
│  └─ Output of a display attribute alternative = 36
├─ ELSE_IF <    >
│  └─ OR <    >
│     ├─ AND <    >
│     │  ├─ Switching direction of setpoint blinking from (TRAFO, ODBOCKA VO FAZE, from same area)= ZAC
│     │  └─ Read state from (TRAFO, ODBOCKA ST.C., from same area)= 13
│     └─ AND <    >
│        ├─ Switching direction of setpoint blinking from (TRAFO, ODBOCKA VO FAZE, from same area)= KON
│        └─ Read state from (TRAFO, ODBOCKA ST.C., from same area)= 15
├─ THEN <BE 11 D2 Stufe 01>
```

Proprietary data, company confidential. All rights reserved.
Confia a tifre da secret d'entreprise. Tous droits reservs.
Comunicado como segredo empresarial. Reservados todos os direitos.
Confiado como secreto industrial. Nos reservamos todos los derechos.

The reproduction, transmission or use of this document or its
is not permitted without express written authority.
Offenders will be liable for damages. All rights, including rights
created by patent grant or registration of a utility model or design, are reserved.

Documentation structur: Standard
Source file: KO050722.ODA

			Date	22.07.2005	VSZ KOSICE	SIEMENS AG ISATOOLS	Substation control system 6MB Function for diagram display
			Drawn	LANG			
			Appr.				
F	Remarks	Date	Name	Norm	Orig./Repl. 1/Repl. by		Table

T = /BR 11
+
-S115
Page 1

Name of function: BE 11 Stufenstellung

Cancel after first fulfilled rule: Yes

```
  └─ Output of a display attribute alternative = 37
├─ ELSE_IF <    >
  └─ OR <    >
     ├─ AND <    >
     │  ├─ Switching direction of setpoint blinking from (TRAFO, ODBOCKA VO FAZE, from same area)= ZAC
     │  └─ Read state from (TRAFO, ODBOCKA ST.C., from same area)= 14
     └─ AND <    >
        ├─ Switching direction of setpoint blinking from (TRAFO, ODBOCKA VO FAZE, from same area)= KON
        └─ Read state from (TRAFO, ODBOCKA ST.C., from same area)= 16
├─ THEN <BE 11 D2 Stufe 01>
  └─ Output of a display attribute alternative = 38
├─ ELSE_IF <    >
  └─ OR <    >
     ├─ AND <    >
     │  ├─ Switching direction of setpoint blinking from (TRAFO, ODBOCKA VO FAZE, from same area)= ZAC
     │  └─ Read state from (TRAFO, ODBOCKA ST.C., from same area)= 15
     └─ AND <    >
        ├─ Switching direction of setpoint blinking from (TRAFO, ODBOCKA VO FAZE, from same area)= KON
        └─ Read state from (TRAFO, ODBOCKA ST.C., from same area)= 17
├─ THEN <BE 11 D2 Stufe 01>
  └─ Output of a display attribute alternative = 39
├─ ELSE_IF <    >
  └─ OR <    >
     ├─ AND <    >
     │  ├─ Switching direction of setpoint blinking from (TRAFO, ODBOCKA VO FAZE, from same area)= ZAC
     │  └─ Read state from (TRAFO, ODBOCKA ST.C., from same area)= 16
     └─ AND <    >
        ├─ Switching direction of setpoint blinking from (TRAFO, ODBOCKA VO FAZE, from same area)= KON
        └─ Read state from (TRAFO, ODBOCKA ST.C., from same area)= 18
├─ THEN <BE 11 D2 Stufe 01>
  └─ Output of a display attribute alternative = 40
├─ ELSE_IF <    >
  └─ OR <    >
     ├─ AND <    >
     │  ├─ Switching direction of setpoint blinking from (TRAFO, ODBOCKA VO FAZE, from same area)= ZAC
```

The reproduction, transmission or use of this document or its is not permitted without express written authority. Offenders will be liable for damages. All rights, including rights created by patent grant or registration of a utility model or design, are reserved. Proprietary data, company confidential. All rights reserved. Confia a titre de secret d'entreprise. Tous droits r,serv,s. Comunicado como segredo empresarial. Reservados todos os direitos. Confiado como secreto industrial. Nos reservamos todos los derechos.

Name of function: BE 11 Stufenstellung

Cancel after first fulfilled rule: Yes

```
│   └─ Read state from (TRAFO, ODBOCKA ST.C., from same area)= 17
│   └─ AND <   >
│       ├─ Switching direction of setpoint blinking from (TRAFO, ODBOCKA VO FAZE, from same area)= KON
│       └─ Read state from (TRAFO, ODBOCKA ST.C., from same area)= 19
├─ THEN <BE 11 D2 Stufe 01>
│  └─ Output of a display attribute alternative = 41
├─ ELSE_IF <   >
│  └─ AND <   >
│     ├─ Switching direction of setpoint blinking from (TRAFO, ODBOCKA VO FAZE, from same area)= ZAC
│     └─ Read state from (TRAFO, ODBOCKA ST.C., from same area)= 18
├─ THEN <BE 11 D2 Stufe 01>
│  └─ Output of a display attribute alternative = 42
├─ ELSE_IF <BE 11 W2 STUFE 1>
│  └─ Read state from (TRAFO, ODBOCKA ST.C., from same area)= 01
├─ THEN <BE 11 D2 Stufe 01>
│  └─ Output of a display attribute alternative = 3
├─ ELSE_IF <BE 11 W3 STUFE 2>
│  └─ Read state from (TRAFO, ODBOCKA ST.C., from same area)= 02
├─ THEN <BE 11 D3 Stufe 02>
│  └─ Output of a display attribute alternative = 4
├─ ELSE_IF <BE 11 W4 STUFE 3>
│  └─ Read state from (TRAFO, ODBOCKA ST.C., from same area)= 03
├─ THEN <BE 11 D4 Stufe 03>
│  └─ Output of a display attribute alternative = 5
├─ ELSE_IF <BE 11 W5 STUFE 4>
│  └─ Read state from (TRAFO, ODBOCKA ST.C., from same area)= 04
├─ THEN <BE 11 D5 Stufe 04>
│  └─ Output of a display attribute alternative = 6
├─ ELSE_IF <BE 11 W6 STUFE 5>
│  └─ Read state from (TRAFO, ODBOCKA ST.C., from same area)= 05
├─ THEN <BE 11 D6 Stufe 05>
│  └─ Output of a display attribute alternative = 7
├─ ELSE_IF <BE 11 W7 STUFE 6>
│  └─ Read state from (TRAFO, ODBOCKA ST.C., from same area)= 06
├─ THEN <BE 11 D7 Stufe 06>
```

Proprietary data, company confidential. All rights reserved.
Confie a titre de secret d'entreprise. Tous droits r,serv,s.
Comunicado como segredo empresarial. Reservados todos os direitos.
Confiado como secreto industrial. Nos reservamos todos los derechos.

The reproduction, transmission or use of this document or its is not permitted without expres written authority.
Offenders will be liable for damages. All rights, including rights created by patent grant or registration of a utility model or design, are reserved

Documentation structur: Standard
Source file: KO050722.ODA

			Date	22.07.2005	VSZ KOSICE	SIEMENS AG ISA TOOLS	Substation control system 6MB Function for diagram display
			Drawn	LANG			
			Appr.				
F	Remarks	Date	Name	Norm	Orig./Repl. 1/Repl. by		Table

T = /BR 13
+
-S115
Page 13

Name of function: BE 11 Stufenstellung

Cancel after first fulfilled rule: Yes

```
  └─ Output of a display attribute alternative = 8
├─ ELSE_IF <BE 11 W8 STUFE 7>
  └─ Read state from (TRAFO, ODBOCKA ST.C., from same area)= 07
├─ THEN <BE 11 D8 Stufe 07>
  └─ Output of a display attribute alternative = 9
├─ ELSE_IF <BE 11 W9 STUFE 8>
  └─ Read state from (TRAFO, ODBOCKA ST.C., from same area)= 08
├─ THEN <BE 11 D9 Stufe 08>
  └─ Output of a display attribute alternative = 10
├─ ELSE_IF <BE 11 W10 STUFE 9>
  └─ Read state from (TRAFO, ODBOCKA ST.C., from same area)= 09
├─ THEN <BE 11 D10 Stufe 09>
  └─ Output of a display attribute alternative = 11
├─ ELSE_IF <BE 11 W11 STUFE 10>
  └─ Read state from (TRAFO, ODBOCKA ST.C., from same area)= 10
├─ THEN <BE 11 D11 Stufe 10>
  └─ Output of a display attribute alternative = 12
├─ ELSE_IF <BE 11 W12 STUFE 11>
  └─ Read state from (TRAFO, ODBOCKA ST.C., from same area)= 11
├─ THEN <BE 11 D12 Stufe 11>
  └─ Output of a display attribute alternative = 13
├─ ELSE_IF <BE 11 W13 STUFE 12>
  └─ Read state from (TRAFO, ODBOCKA ST.C., from same area)= 12
├─ THEN <BE 11 D13 Stufe 12>
  └─ Output of a display attribute alternative = 14
├─ ELSE_IF <BE 11 W14 STUFE 13>
  └─ Read state from (TRAFO, ODBOCKA ST.C., from same area)= 13
├─ THEN <BE 11 D14 Stufe 13>
  └─ Output of a display attribute alternative = 15
├─ ELSE_IF <BE 11 W15 STUFE 14>
  └─ Read state from (TRAFO, ODBOCKA ST.C., from same area)= 14
├─ THEN <BE 11 D15 Stufe 14>
  └─ Output of a display attribute alternative = 16
├─ ELSE_IF <BE 11 W16 STUFE 15>
  └─ Read state from (TRAFO, ODBOCKA ST.C., from same area)= 15
```

Proprietary data, company confidential. All rights reserved.
Confie a titre de secret d'entreprise. Tous droits reservs.
Comunicado como segredo empresarial. Reservados todos os direitos.
Confiado como secreto industrial. Nos reservamos todos los derechos.
The reproduction, transmission or use of this document or its is not permitted without expres written authority.
Offenders will be liable for damages. All rights, including rights created by patent grant or registration of a utility model or design, are reserved

Documentation structur: Standard
Source file: KO050722.ODA

Rev.	Remarks	Date	Name	Date	22.07.2005	VSZ KOSICE	SIEMENS AG ISA TOOLS	Substation control system 6MB Function for diagram display	T = /BR 14
				Drawn	LANG				+
				Appr.					-S115 Page 14
				Norm		Orig./Repl. 1/Repl. by		Table	

Name of function: BE 11 Stufenstellung

Cancel after first fulfilled rule: Yes

```
├─ THEN <BE 11 D16 Stufe 15>
│  └─ Output of a display attribute alternative = 17
├─ ELSE_IF <BE 11 W17 STUFE 16>
│  └─ Read state from (TRAFO, ODBOCKA ST.C., from same area)= 16
├─ THEN <BE 11 D17 Stufe 16>
│  └─ Output of a display attribute alternative = 18
├─ ELSE_IF <BE 11 W18 STUFE 17>
│  └─ Read state from (TRAFO, ODBOCKA ST.C., from same area)= 17
├─ THEN <BE 11 D18 Stufe 17>
│  └─ Output of a display attribute alternative = 19
├─ ELSE_IF <    >
│  └─ Read state from (TRAFO, ODBOCKA ST.C., from same area)= 18
├─ THEN <    >
│  └─ Output of a display attribute alternative = 20
├─ ELSE_IF <    >
│  └─ Read state from (TRAFO, ODBOCKA ST.C., from same area)= 19
├─ THEN <    >
│  └─ Output of a display attribute alternative = 21
└─ ELSE <sonst>
   └─ Output of a display attribute alternative = 23
```

Proprietary data, company confidential. All rights reserved.
Confie a titre de secret d'entreprise. Tous droits réservés.
Comunicado como segredo empresarial. Reservados todos os direitos.
Confiado como secreto industrial. Nos reservamos todos los derechos.

The reproduction, transmission or use of this document or its is not permitted without express written authority.
Offenders will be liable for damages. All rights, including rights created by patent grant or registration of a utility model or design, are reserved.

Documentation structur: Standard
Source file: KO050722.ODA

			Date	22.07.2005	VSZ KOSICE	SIEMENS AG ISA TOOLS	Substation control system 6MB Function for diagram display	T = /BR 15
			Drawn	LANG				+
			Appr.					-S115 Page 15
F	Remarks	Date	Name Norm		Orig./Repl. 1/Repl. by		Table	

Name of function: BE 14 8TK

Cancel after first fulfilled rule: Yes

```
Function for diagram display <BE 14 8TK>
├─ IF <   >
│  └─ AND <   >
│     ├─ Read state from (   , GA-ENDE-MARKIERUNG, from the area of the acquisition unit) = ZAC
│     ├─ Read state from (   , ZABLOKOVANI POLE, from same area)= KON
│     └─ OR <   >
│        ├─ Switching direction of setpoint blinking from (Initiation information) = vyp.
│        └─ Switching direction of setpoint blinking from (Initiation information) = zap.
├─ THEN <   >
│  └─ Output of a display attribute alternative = 6
├─ ELSE_IF <   >
│  └─ AND <   >
│     ├─ Read state from (   , GA-ENDE-MARKIERUNG, from the area of the acquisition unit) = ZAC
│     └─ Read state from (   , ZABLOKOVANI POLE, from same area)= ZAC
├─ THEN <   >
│  └─ Output of a display attribute alternative = 3
├─ ELSE_IF <   >
│  └─ AND <   >
│     ├─ Read state from (   , GA-ENDE-MARKIERUNG, from the area of the acquisition unit) = ZAC
│     └─ Read state from (   , ZABLOKOVANI POLE, from same area)= KON
├─ THEN <   >
│  └─ Output of a display attribute alternative = 4
└─ ELSE <   >
   └─ Output of a display attribute alternative = 5
```

Proprietary data, company confidential. All rights reserved.
Confie a titre de secret d'entreprise. Tous droits reservés.
Comunicado como segredo empresarial. Reservados todos os direitos.
Confiado como secreto industrial. Nos reservamos todos los derechos.

The reproduction, transmission or use of this document or its is not permitted without expres written authority.
Offenders will be liable for damages. All rights, including rights created by patent grant or registration of a utility model or design, are reserved

Documentation structur: Standard
Source file: KO050722.ODA

Rev.	Remarks	Date	Name	Date	22.07.2005	VSZ KOSICE	SIEMENS AG ISA TOOLS	Substation control system 6MB Function for diagram display	T = /BR 16
				Drawn	LANG				+
				Appr.					
				Norm		Orig./Repl. 1/Repl. by		Table	-S115 Page 16

Name of function: BE 14 Feldsperre Sollbl.

Cancel after first fulfilled rule: Yes

```
Function for diagram display <BE 14 Feldsperre Sollbl.>
 ├─ IF <BE 2 W1 EIN-Stellung - blinkend>
 │   └─ AND <GA-Ende UND (SOBL ODER (Zust LS UND ZUWE>
 │       ├─ Read state from (    , GA-ENDE-MARKIERUNG, from the area of the acquisition unit) = ZAC
 │       └─ OR <SOBL ODER (Zust LS UND ZUWE)>
 │           ├─ Switching direction of setpoint blinking from (Initiation information) = zap.
 │           └─ AND <Zust LS UND ZUWE>
 │               ├─ Read state from (Initiation information) = zap.
 │               └─ State change from (Initiation information) = NICHT QUITTIERT
 ├─ THEN <BE 2 D1 EIN-Stellung - blinkend>
 │   └─ Output of a display attribute alternative = 6
 ├─ ELSE_IF <BE 2 W2 AUS-Stellung - blinkend>
 │   └─ AND <GA-Ende UND (SOBL ODER (Zust LS UND ZUWE>
 │       ├─ Read state from (    , GA-ENDE-MARKIERUNG, from the area of the acquisition unit) = ZAC
 │       └─ OR <SOBL ODER (Zust LS UND ZUWE)>
 │           ├─ Switching direction of setpoint blinking from (Initiation information) = vyp.
 │           └─ AND <Zust LS UND ZUWE>
 │               ├─ Read state from (Initiation information) = vyp.
 │               └─ State change from (Initiation information) = NICHT QUITTIERT
 ├─ THEN <BE 2 D2 AUS-Stellung - blinkend>
 │   └─ Output of a display attribute alternative = 7
 ├─ ELSE_IF <BE 2 W3 EIN-Stellung>
 │   └─ AND <GA-Ende UND Zust LS UND ZUWE>
 │       ├─ Read state from (    , GA-ENDE-MARKIERUNG, from the area of the acquisition unit) = ZAC
 │       ├─ Read state from (Initiation information) = zap.
 │       └─ State change from (Initiation information) = QUITTIERT
 ├─ THEN <BE 2 D3 EIN-Stellung>
 │   └─ Output of a display attribute alternative = 3
 ├─ ELSE_IF <BE 2 W4 AUS-Stellung>
 │   └─ AND <GA-Ende UND Zust LS UND ZUWE>
 │       ├─ Read state from (    , GA-ENDE-MARKIERUNG, from the area of the acquisition unit) = ZAC
 │       ├─ Read state from (Initiation information) = vyp.
 │       └─ State change from (Initiation information) = QUITTIERT
 ├─ THEN <BE 2 D4 AUS-Stellung>
 │   └─ Output of a display attribute alternative = 4
```

Proprietary data, company confidential. All rights reserved.
Confia a titre de secret d'entreprise. Tous droits réservés.
Comunicado como segredo empresarial. Reservados todos os direitos.
Confiado como secreto industrial. Nos reservamos todos los derechos.

The reproduction, transmission or use of this document or its is not permitted without express written authority.
Offenders will be liable for damages. All rights, including rights created by patent grant or registration of a utility model or design, are reserved

Documentation structur: Standard
Source file: KO050722.ODA

			Date	22.07.2005	VSZ KOSICE	SIEMENS AG ISA TOOLS	Substation control system 6MB Function for diagram display	T = /BR 17
			Drawn	LANG				+
			Appr.					-S115 Page 7
F	Remarks	Date	Name Norm		Orig./Repl. 1/Repl. by		Table	

Name of function: BE 14 Feldsperre Sollbl.

Cancel after first fulfilled rule: Yes

```
└ ELSE <    >
  └ Output of a display attribute alternative = 4
```

Proprietary data, company confidential. All rights reserved.
Confie a titre de secret d'entreprise. Tous droits reservés.
Comunicado como segredo empresarial. Reservados todos os direitos.
Confiado como secreto industrial. Nos reservamos todos los derechos.

The reproduction, transmission or use of this document or its is not permitted without express written authority.
Offenders will be liable for damages. All rights, including rights created by patent grant or registration of a utility model or design, are reserved

Documentation structur: Standard
Source file: KO050722.ODA

Rev.	Remarks	Date	Name	Date	22.07.2005	VSZ KOSICE	SIEMENS AG ISAOOLS	Substation control system 6MB Function for diagram display	T = /BR 18
				Drawn	LANG				+
				Appr.					
				Norm		Orig./Repl. 1/Repl. by		Table	-S115 Page 18

Name of function: BE 18 Stufengleichheit

Cancel after first fulfilled rule: Yes

```
Function for diagram display <BE 18 Stufengleichheit>
├─ IF <BE 4 W2 Zustand Fern>
│   └─ Read state from (    , PORUCHA PARAL.REG., from same area)= ZAC
├─ THEN <BE 4 D2 Zustand Fern>
│   └─ Output of a display attribute alternative = 4
├─ ELSE_IF <BE 4 W3 Zustand Nah>
│   └─ Read state from (    , PORUCHA PARAL.REG., from same area)= KON
└─ THEN <BE 4 D3 Zustand Nah>
    └─ Output of a display attribute alternative = 5
```

Proprietary data, company confidential. All rights reserved.
Confie a titre de secret d'entreprise. Tous droits reservés.
Comunicado como segredo empresarial. Reservados todos os direitos.
Confiado como secreto industrial. Nos reservamos todos los derechos.

The reproduction, transmission or use of this document or its is not permitted without express written authority.
Offenders will be liable for damages. All rights, including rights created by patent grant or registration of a utility model or design, are reserved

Documentation structur: Standard
Source file: KO050722.ODA

			Date	22.07.2005	VSZ KOSICE	SIEMENS AG ISA TOOLS	Substation control system 6MB Function for diagram display
			Drawn	LANG			
			Appr.				Table
F	Remarks	Date	Name	Norm	Orig./Repl. 1/Repl. by		

T = /BR 19
+
-S115
Page 19

Name of function: BE 21 Kommend/gehend

Cancel after first fulfilled rule: Yes

```
Function for diagram display <BE 21 Kommend/gehend>
 ├─ IF <    >
 │   └─ AND <    >
 │       ├─ Read state from (    , GA-ENDE-MARKIERUNG, from the area of the acquisition unit) = ZAC
 │       └─ Read state from (Initiation information) = KOM
 ├─ THEN <    >
 │   └─ Output of a display attribute alternative = 3
 ├─ ELSE_IF <    >
 │   └─ AND <    >
 │       ├─ Read state from (    , GA-ENDE-MARKIERUNG, from the area of the acquisition unit) = ZAC
 │       └─ Read state from (Initiation information) = GEH
 ├─ THEN <    >
 │   └─ Output of a display attribute alternative = 4
 └─ ELSE <    >
     └─ Output of a display attribute alternative = 5
```

Proprietary data, company confidential. All rights reserved.
Confia a titre de secret d'entreprise. Tous droits reservés.
Comunicado como secreto empresarial. Reservados todos os direitos.
Confiado como secreto industrial. Nos reservamos todos los derechos.
The reproduction, transmission or use of this document or its
is not permitted without expres written authority.
Offenders will be liable for damages. All rights, including rights
created by patent grant or registration of a utility model or design, are reserved

Documentation structur: Standard
Source file: KO050722.ODA

				Date	22.07.2005	VSZ KOSICE	SIEMENS AG ISATOOLS	Substation control system 6MB Function for diagram display	T = /BR 20 +
				Drawn	LANG				
				Appr.					
Rev.	Remarks	Date	Name	Norm		Orig./Repl. 1/Repl. by		Table	-S115 Page 20

Name of function: BE 23 Kommend/gehend quittiert

Cancel after first fulfilled rule: Yes

```
Function for diagram display <BE 23 Kommend/gehend quittiert>
├─ IF <BE 2 W1 EIN-Stellung - blinkend>
│  └─ AND <GA-Ende UND (SOBL ODER (Zust LS UND ZUWE>
│     ├─ Read state from (    , GA-ENDE-MARKIERUNG, from the area of the acquisition unit) = ZAC
│     ├─ Read state from (Initiation information) = zap.
│     └─ State change from (Initiation information) = NICHT QUITTIERT
├─ THEN <BE 2 D1 EIN-Stellung - blinkend>
│  └─ Output of a display attribute alternative = 6
├─ ELSE_IF <    >
│  └─ AND <GA-Ende UND (SOBL ODER (Zust LS UND ZUWE>
│     ├─ Read state from (    , GA-ENDE-MARKIERUNG, from the area of the acquisition unit) = ZAC
│     ├─ Read state from (Initiation information) = vyp.
│     └─ State change from (Initiation information) = NICHT QUITTIERT
├─ THEN <    >
│  └─ Output of a display attribute alternative = 6
├─ ELSE_IF <BE 2 W3 EIN-Stellung>
│  └─ AND <GA-Ende UND Zust LS UND ZUWE>
│     ├─ Read state from (    , GA-ENDE-MARKIERUNG, from the area of the acquisition unit) = ZAC
│     └─ Read state from (Initiation information) = zap.
├─ THEN <BE 2 D3 EIN-Stellung>
│  └─ Output of a display attribute alternative = 3
├─ ELSE_IF <BE 2 W4 AUS-Stellung>
│  └─ AND <GA-Ende UND Zust LS UND ZUWE>
│     ├─ Read state from (    , GA-ENDE-MARKIERUNG, from the area of the acquisition unit) = ZAC
│     └─ Read state from (Initiation information) = vyp.
├─ THEN <BE 2 D4 AUS-Stellung>
│  └─ Output of a display attribute alternative = 4
└─ ELSE <    >
   └─ Output of a display attribute alternative = 5
```

Proprietary data, company confidential. All rights reserved.
Confie a titre de secret d'entreprise. Tous droits r.serv.s.
Comunicado como segredo empresarial. Reservados todos os direitos.
Confiado como secreto industrial. Nos reservamos todos los derechos.

The reproduction, transmission or use of this document or its is not permitted without expres written authority.
Offenders will be liable for damages. All rights, including rights created by patent grant or registration of a utility model or design, are reserved

Documentation structur: Standard
Source file: KO050722.ODA

			Date	22.07.2005	VSZ KOSICE	SIEMENS AG ISA TOOLS	Substation control system 6MB Function for diagram display	T = /BR 21
			Drawn	LANG				+
			Appr.					-S115 Page 1
F	Remarks	Date	Name	Norm	Orig./Repl. 1/Repl. by		Table	

Name of function: BE 26 Kommend/gehend Reservetrafo

Cancel after first fulfilled rule: Yes

```
Function for diagram display <BE 26 Kommend/gehend Reservetrafo>
├─ IF <   >
│  └─ AND <   >
│     ├─ Read state from (   , GA-ENDE-MARKIERUNG, from the area of the acquisition unit) = ZAC
│     └─ OR <   >
│        ├─ Read state from (   , Q-JEDNOTKA NEZARADENA DO L1, from same area)= ZAC
│        ├─ Read state from (   , Q-JEDNOTKA NEZARADENA DO L2, from same area)= ZAC
│        └─ Read state from (   , Q-JEDNOTKA NEZARADENA DO L3, from same area)= ZAC
├─ THEN <   >
│  └─ Output of a display attribute alternative = 3
├─ ELSE_IF <   >
│  └─ AND <   >
│     ├─ Read state from (   , GA-ENDE-MARKIERUNG, from the area of the acquisition unit) = ZAC
│     ├─ Read state from (   , Q-JEDNOTKA NEZARADENA DO L1, from same area)= KON
│     ├─ Read state from (   , Q-JEDNOTKA NEZARADENA DO L2, from same area)= KON
│     └─ Read state from (   , Q-JEDNOTKA NEZARADENA DO L3, from same area)= KON
├─ THEN <   >
│  └─ Output of a display attribute alternative = 4
└─ ELSE <   >
   └─ Output of a display attribute alternative = 5
```

Proprietary data, company confidential. All rights reserved.
Confie a titre de secret d'entreprise. Tous droits servis.
Comunicado como segredo empresarial. Reservados todos os direitos.
Confiado como secreto industrial. Nos reservamos todos los derechos.
The reproduction, transmission or use of this document or its
is not permitted without expres written authority.
Offenders will be liable for damages. All rights, including rights
created by patent grant or registration of a utility model or design, are reserved.

Documentation structur: Standard
Source file: KO050722.ODA

				Date	22.07.2005	VSZ KOSICE	SIEMENS AG ISATOOLS	Substation control system 6MB Function for diagram display	T = /BR 22
				Drawn	LANG				+
				Appr.					-S115 Page 22
Rev.	Remarks	Date	Name	Norm		Orig./Repl. 1/Repl. by		Table	

B. Ereignisliste

```
05 10 15 20 25 30 35 40 45 50 55 60 65 70 75 80

   U D A L O S T I                    STRANA * /*
05 *
10
15
20
25
30
```

The reproduction, transmission or use of this document or its is not permitted without express written authority. Offenders will be liable for damages. All rights, including rights created by patent grant or registration of a utility model or design, are reserved.
Proprietary data, company confidential. All rights reserved. Confie a titre de secret d'entreprise. Tous droits reservés. Comunicado como segredo empresarial. Reservados todos os direitos. Confiado como secreto industrial. Nos reservamos todos los derechos.

Documentation structur: Standard
Source file: KO050722.ODA

				Date	22.07.2005	VSZ KOSICE	SIEMENS AG ISATOOLS	Substation control system 6MB Event list for VDU		T	=	/BS 1			
				Drawn	LANG						+				
				Appr.											
F	Remarks	Date	Name	Norm		Orig./Repl. 1/Repl. by		Table			-S116	Page 1			

B. Meldebereichsbild

	05	10	15	20	25	30	35	40	45	50	55	60	65	70	75	80
							110kV:S		220kV:SS		VYSTRAHY:					
							10kV:S									
05																
10																
15																
20																
25																
30																

The reproduction, transmission or use of this document or its contents is not permitted without express written authority. Offenders will be liable for damages. All rights, including rights created by patent grant or registration of a utility model or design, are reserved.
Proprietary data, company confidential. All rights reserved. Confie a titre de secret d'entreprise. Tous droits réservés. Comunicado como segredo empresarial. Reservados todos os direitos. Confiado como secreto industrial. Nos reservamos todos los derechos.

Documentation structur: Standard
Source file: KO050722.ODA

Rev.	Remarks	Date	Name	Date	22.07.2005	VSZ KOSICE	SIEMENS AG ISA TOOLS	Substation control system 6MB Indication area	T = /BS 2
				Drawn	LANG				+
				Appr.					-S116 Page 2
				Norm		Orig./Repl. 1/Repl. by		Table	

Allocated diagram B. Meldebereichsbild

Name	Variable type	Position Column	Position Line	Display of indication class	Indication class	Display attribute group	Allocation of:	Section
Summenanzeige 10kV Mk 2 T201	Sum	38	2	S	2	ABG 00 Summeninfo Meldebereichsbild	Section	T201
Summenanzeige 10kV Mk 2 T202	Sum	38	2	S	2	ABG 00 Summeninfo Meldebereichsbild	Section	T202
Summenanzeige 10kV Mk 2 T60	Sum	38	2	S	2	ABG 00 Summeninfo Meldebereichsbild	Section	T60
Summenanzeige 110kV Mk 2	Sum	38	1	S	2	ABG 00 Summeninfo Meldebereichsbild	Section	R110
Summenanzeige 220kV Mk 1	Sum	48	1	S	1	ABG 00 Summeninfo Meldebereichsbild	Section	R220
Summenanzeige 220kV Mk 2	Sum	47	1	S	2	ABG 00 Summeninfo Meldebereichsbild	Section	R220

Proprietary data, company confidential. All rights reserved.
Confie a titre de secret d'entreprise. Tous droits r,serv,s.
Comunicado como segredo empresarial. Reservados todos os direitos.
Confiado como secreto industrial. Nos reservamos todos los derechos.

The reproduction, transmission or use of this document or its is not permitted without expres written authority.
Offenders will be liable for damages. All rights, including rights created by patent grant or registration of a utility model or design, are reserved

Documentation structur: Standard
Source file: KO050722.ODA

			Date	22.07.2005	VSZ KOSICE	SIEMENS AG ISA TOOLS	Substation control system 6MB Sum flag for a voltage level and bay
			Drawn	LANG			
			Appr.				
F	Remarks	Date	Name	Norm	Orig./Repl. 1/Repl. by		Table

T = /BS 3
+
-S116
Page 3

Proprietary data, company confidential. All rights reserved
Confie a être de secret d'entreprise. Tous droits réservés
Comunicado como segredo empresarial. Reservados todos os direitos
Confiado como secreto industrial. Nos reservamos todos los derechos.
The reproduction, transmission or use of this document or its
is not permitted without express written authority.
Offenders will be liable for damages. All rights, including rights
created by patent grant or registration of a utility model or design, are reserved

Documentation structur: Standard
Source file: KO050722.ODA

Allocated diagram B. Meldebereichsbild

Name	Variable type	Position Column	Position Line	Allocated station	Display of indication class	Indication class	Display attribute group
Summenanzeige Warnmeldeliste	Sum	59	1		S	1	ABG 00 Summeninfo Meldebereichsbild

Date	22.07.2005	VSZ KOSICE	SIEMENS AG ISATOOLS
Drawn	LANG		
Appr.			
Rev.	Remarks	Date	Name Norm

Orig./Repl. 1/Repl. by

Substation control system 6MB
Sum flag for alarm lists

Table

T = /BS 4
+

-S116

Allocated diagram B. Meldebereichsbild

Name	Variable type	Position Column	Position Line	Abbreviation for weekday	Day	Month	Year	Hours	Minutes	Updating cyclic every min.	Display attribute group
Datum/Uhrzeit	Dat	64	1	N	Y	Y	Y	Y	Y	Y	ABG 00 Datum und Uhrzeit

Proprietary data, company confidential. All rights reserved.
Confie a titre de secret d'entreprise. Tous droits réservés.
Comunicado como segredo empresarial. Reservados todos os direitos.
Confiado como secreto industrial. Nos reservamos todos los derechos.

The reproduction, transmission or use of this document or its is not permitted without expres written authority.
Offenders will be liable for damages. All rights, including rights created by patent grant or registration of a utility model or design, are reserved

Documentation structur: Standard
Source file: KO050722.ODA

			Date	22.07.2005	VSZ KOSICE	SIEMENS AG ISAOOLS	Substation control system 6MB Date/time display	T	=	/BS 5
			Drawn	LANG					+	
			Appr.						-S116	Page 5
F	Remarks	Date	Name Norm		Orig./Repl. 1/Repl. by		Table			

B. Meldebereichsbild leer

	05	10	15	20	25	30	35	40	45	50	55	60	65	70	75	80
05																
10																
15																
20																
25																
30																

The reproduction, transmission or use of this document or its is not permitted without express written authority. Offenders will be liable for damages. All rights, including rights created by patent grant or registration of a utility model or design, are reserved. Proprietary data, company confidential. All rights reserved. Confie a titre de secret d'entreprise. Tous droits réservés. Comunicado como segredo empresarial. Reservados todos os direitos. Confiado como secreto industrial. Nos reservamos todos los derechos.

Documentation structur: Standard
Source file: KO050722.ODA

Rev.	Remarks	Date	Name	Date	22.07.2005	VSZ KOSICE	SIEMENS AG ISAOOLS	Substation control system 6MB Indication area	T = /BS 6
				Drawn	LANG				+
				Appr.					-S116
				Norm		Orig./Repl. 1/Repl. by		Table	Page 6

B. Warnmeldeliste

	05	10	15	20	25	30	35	40	45	50	55	60	65	70	75	80
05	V	Y	S	T	R	A	H	Y				*		STRANA	*	/*
10	*															
15																
20																
25																
30																

The reproduction, transmission or use of this document or its is not permitted without expres written authority. Offenders will be liable for damages. All rights, including rights created by patent grant or registration of a utility model or design, are reserved
Proprietary data, company confidential. All rights reserved. Confie a titre de secret d'entreprise. Tous droits r.serv.s. Comunicado como segredo empresarial. Reservados todos os direitos. Confiado como secreto industrial. Nos reservamos todos los derechos.

Documentation structur: Standard
Source file: KO050722.ODA

			Date	22.07.2005	VSZ KOSICE	SIEMENS AG ISA TOOLS	Substation control system 6MB Alarm list for VDU	T =	/BS 7
			Drawn	LANG				+	
			Appr.					-S116	Page 7
F	Remarks	Date	Name	Norm	Orig./Repl. 1/Repl. by		Table		

Detailbild 1 Kosice

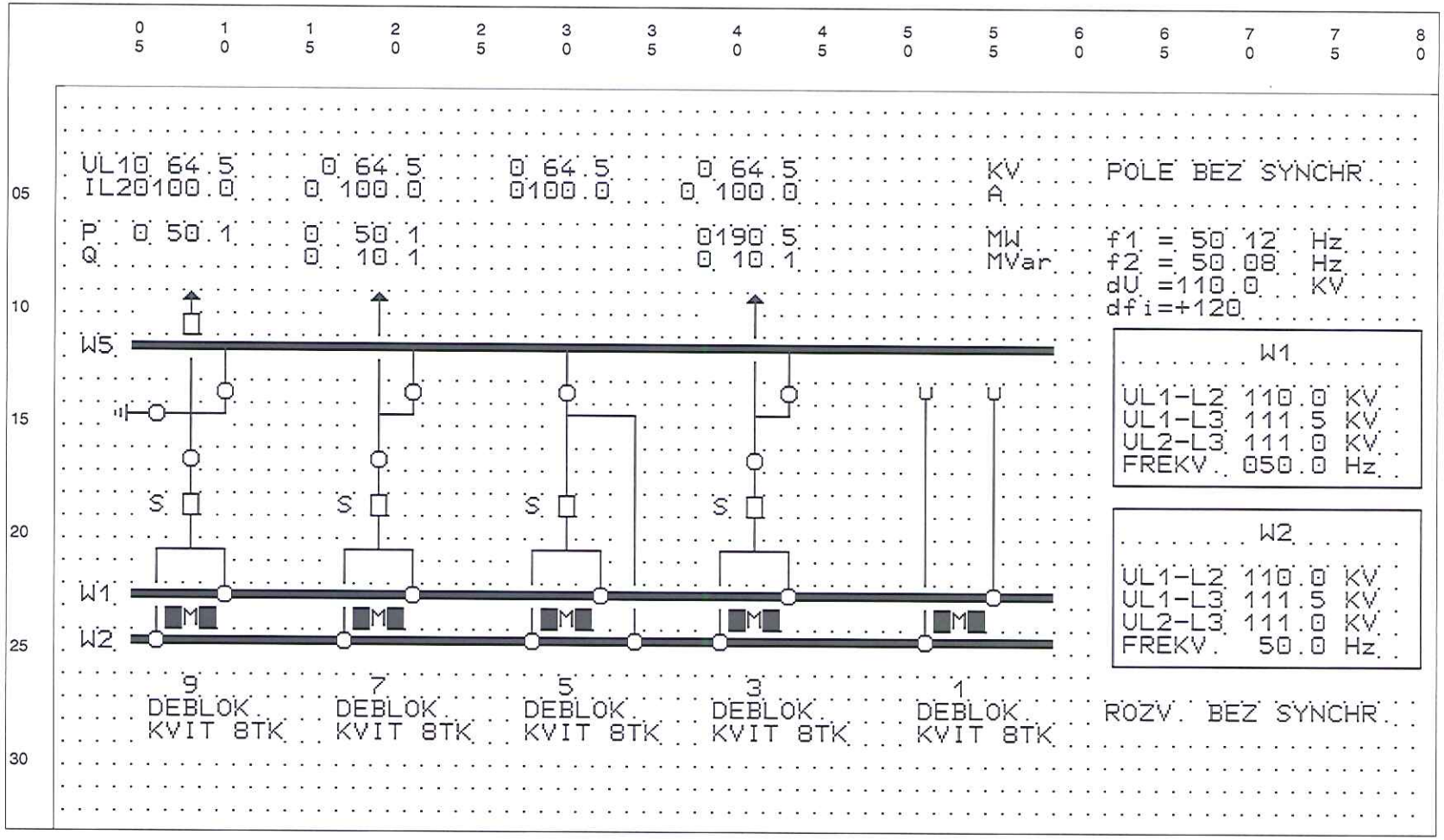

The reproduction, transmission or use of this document or its contents is not permitted without express written authority. Offenders will be liable for damages. All rights, including rights created by patent grant or registration of a utility model or design, are reserved. Proprietary data, company confidential. All rights reserved. Confie a titre de secret d'entreprise. Tous droits réservés. Comunicado como segredo empresarial. Reservados todos os direitos. Confiado como secreto industrial. Nos reservamos todos los derechos.

Documentation structur: Standard
Source file: KO050722.ODA

Rev.	Remarks	Date	Name	Date	22.07.2005	VSZ KOSICE	SIEMENS AG SAOOLS	Substation control system 6MB Detailed diagram	T = /BS 8
				Drawn	LANG				+
				Appr.					
				Norm		Orig./Repl. 1/Repl. by		Table	-S116 Page 8

Allocated diagram Detailbild 1 Kosice

Type: Indication field for symbol/figure

Name	Position Column	Position Line	Position recognition	Acknowledgeable	Display as	Display attribute group	Allocation of:
Deblok	28	28		N	SY	ABG 22 Kom/Geh/Schwarz/Cyan	INF
Deblok	51	28		N	SY	ABG 22 Kom/Geh/Schwarz/Cyan	INF
Deblok	17	28		N	SY	ABG 22 Kom/Geh/Schwarz/Cyan	INF
Deblok	39	28		N	SY	ABG 22 Kom/Geh/Schwarz/Cyan	INF
Deblok	6	28		N	SY	ABG 22 Kom/Geh/Schwarz/Cyan	INF
Deblokacia blokovania	18	24	BLOK - positionierbare SF6 Block.	Y	SY	ABG 21 8TK	INF
Deblokacia blokovania	40	24	BLOK - positionierbare SF6 Block.	Y	SY	ABG 21 8TK	INF
Deblokacia blokovania	52	24	BLOK - positionierbare SF6 Block.	Y	SY	ABG 21 8TK	INF
Deblokacia blokovania	7	24	BLOK - positionierbare SF6 Block.	Y	SY	ABG 21 8TK	INF
Deblokacia blokovania	29	24	BLOK - positionierbare SF6 Block.	Y	SY	ABG 21 8TK	INF
Feldsperre	28	10	POAU - postionierbare Feldsperre	N	FIG	ABG 14 Feldsperre gruen 110KV	INF
Feldsperre	39	10	POAU - postionierbare Feldsperre	N	FIG	ABG 14 Feldsperre gruen 110KV	INF
Feldsperre	6	10	POAU - postionierbare Feldsperre	N	FIG	ABG 14 Feldsperre gruen 110KV	INF
Feldsperre	17	10	POAU - postionierbare Feldsperre	N	FIG	ABG 14 Feldsperre gruen 110KV	INF
Feldsperre	51	14	POAU - postionierbare Feldsperre	N	FIG	ABG 14 Feldsperre gruen 110KV	INF
Feldsperre ohne SS	55	14		N	FIG	ABG 14 Feldsperre gruen 110KV	INF
KVIT 8TK	39	29		Y	SY	ABG 23 Kom/Geh Quitt	INF
KVIT 8TK	28	29		Y	SY	ABG 23 Kom/Geh Quitt	INF
KVIT 8TK	51	29		Y	SY	ABG 23 Kom/Geh Quitt	INF
KVIT 8TK	6	29		Y	SY	ABG 23 Kom/Geh Quitt	INF
KVIT 8TK	17	29		Y	SY	ABG 23 Kom/Geh Quitt	INF
Leistungsschalter Gegenseite Feld 09	8	11		Y	SY	ABG 02 Leistungsschalter 110kV	INF
Leistungsschalter QM	8	19	POINTERN - positionierbare LS/Intern	Y	SY	ABG 02 Leistungsschalter 110kV	INF
Leistungsschalter QM	30	19	POINTERN - positionierbare LS/Intern	Y	SY	ABG 02 Leistungsschalter 110kV	INF
Leistungsschalter QM	41	19	POINTERN - positionierbare LS/Intern	Y	SY	ABG 02 Leistungsschalter 110kV	INF
Leistungsschalter QM	19	19	POINTERN - positionierbare LS/Intern	Y	SY	ABG 02 Leistungsschalter 110kV	INF
POLE BEZ SYNCHR.	62	4		N	SY	ABG 22 Kom/Geh/Schwarz/Cyan	INF
Quitt SF6	31	24	KVIT - postionierbare SF6 Quittierung	Y	SY	ABG 21 8TK	INF
Quitt SF6	9	24	KVIT - postionierbare SF6 Quittierung	Y	SY	ABG 21 8TK	INF
Quitt SF6	20	24	KVIT - postionierbare SF6 Quittierung	Y	SY	ABG 21 8TK	INF
Quitt SF6	42	24	KVIT - postionierbare SF6 Quittierung	Y	SY	ABG 21 8TK	INF
Quitt SF6	54	24	KVIT - postionierbare SF6 Quittierung	Y	SY	ABG 21 8TK	INF

Proprietary data, company confidential. All rights reserved.
Confie a titre de secret d'entreprise. Tous droits réservés.
Comunicado como segredo empresarial. Reservados todos os direitos.
Confiado como secreto industrial. Nos reservamos todos los derechos.
The reproduction, transmission or use of this document or its is not permitted without expres written authority.
Offenders will be liable for damages. All rights, including rights created by patent grant or registration of a utility model or design, are reserved.

Documentation structur: Standard
Source file: KO050722.ODA

			Date	22.07.2005	VSZ KOSICE	SIEMENS AG ISAIOOLS	Substation control system 6MB Indication field
			Drawn	LANG			
			Appr.				
F	Remarks	Date	Name	Norm	Orig./Repl. 1/Repl. by		Table

T = /BS 9
+
-S116
Page 9

Allocated diagram: Detailbild 1 Kosice

Type: Indication field for symbol/figure

Name	Section	Bay	Logical device	Lower limit
Deblok	R110	EA05		PREVADZKA S1
Deblok	R110	EA01		PREVADZKA S1
Deblok	R110	EA07		PREVADZKA S1
Deblok	R110	EA03		PREVADZKA S1
Deblok	R110	EA09		PREVADZKA S1
Deblokacia blokovania	R110	EA07		DEBLOKACIA BLOKOVANIA
Deblokacia blokovania	R110	EA03		DEBLOKACIA BLOKOVANIA
Deblokacia blokovania	R110	EA01		DEBLOKACIA BLOKOVANIA
Deblokacia blokovania	R110	EA09		DEBLOKACIA BLOKOVANIA
Deblokacia blokovania	R110	EA05		DEBLOKACIA BLOKOVANIA
Feldsperre	R110	EA05		ZABLOKOVANI POLE
Feldsperre	R110	EA03		ZABLOKOVANI POLE
Feldsperre	R110	EA09		ZABLOKOVANI POLE
Feldsperre	R110	EA07		ZABLOKOVANI POLE
Feldsperre	R110	EA01		ZABLOKOVANI POLE
Feldsperre ohne SS	R110	EA01		ZABLOKOVANI POLE
KVIT 8TK	R110	EA03		KVIT 8TK
KVIT 8TK	R110	EA05		KVIT 8TK
KVIT 8TK	R110	EA01		KVIT 8TK
KVIT 8TK	R110	EA09		KVIT 8TK
KVIT 8TK	R110	EA07		KVIT 8TK
Leistungsschalter Gegenseite Feld 09	T02-9	POLE09	PROTILAHLY VYPINAC	SCHALTZUSTAND
Leistungsschalter QM	R110	EA09	VYPINAC Q0	SCHALTZUSTAND
Leistungsschalter QM	R110	EA05	VYPINAC Q0	SCHALTZUSTAND
Leistungsschalter QM	R110	EA03	VYPINAC Q0	SCHALTZUSTAND
Leistungsschalter QM	R110	EA07	VYPINAC Q0	SCHALTZUSTAND
POLE BEZ SYNCHR.	R110	SPOL		VYPNUTIE SYNCHRONIZACIE
Quitt SF6	R110	EA05		KVITOVANIE
Quitt SF6	R110	EA09		KVITOVANIE
Quitt SF6	R110	EA07		KVITOVANIE
Quitt SF6	R110	EA03		KVITOVANIE
Quitt SF6	R110	EA01		KVITOVANIE

Proprietary data, company confidential. All rights reserved.
Confie a titre de secret d'entreprise. Tous droits réservés.
Comunicado como segredo empresarial. Reservados todos os direitos.
Confiado como secreto industrial. Nos reservamos todos los derechos.

The reproduction, transmission or use of this document or its is not permitted without express written authority.
Offenders will be liable for damages. All rights, including rights created by patent grant or registration of a utility model or design, are reserved.

Documentation structur: Standard
Source file: KO050722.ODA

Rev.	Remarks	Date	Name	Date	22.07.2005	VSZ KOSICE	SIEMENS AG ISAOOLS	Substation control system 6MB Indication field	T = /BS 10
				Drawn	LANG				+
				Appr.					-S116 Page 10
				Norm		Orig./Repl. 1/Repl. by		Table	

Allocated diagram Detailbild 1 Kosice

Type: Indication field for symbol/figure

Name	Position Column	Position Line	Position recognition	Acknowledgeable	Display as	Display attribute group	Allocation of:
ROZV. BEZ SYNCHR.	62	28		N	SY	ABG 22 Kom/Geh/Schwarz/Cyan	INF
S5 M	53	24		N	SY	ABG 24 Kom/Geh/Weiß/Schwarz	INF
S5 M	8	24		N	SY	ABG 24 Kom/Geh/Weiß/Schwarz	INF
S5 M	41	24		N	SY	ABG 24 Kom/Geh/Weiß/Schwarz	INF
S5 M	19	24		N	SY	ABG 24 Kom/Geh/Weiß/Schwarz	INF
S5 M	30	24		N	SY	ABG 24 Kom/Geh/Weiß/Schwarz	INF
Trenner Q1	55	23	POSC - positionierbare Schalter	Y	SY	ABG 02 Trenner 110kV Kringel oben	INF
Trenner Q1	32	23	POSC - positionierbare Schalter	Y	SY	ABG 02 Trenner 110kV Kringel oben	INF
Trenner Q1	43	23	POSC - positionierbare Schalter	Y	SY	ABG 02 Trenner 110kV Kringel oben	INF
Trenner Q1	10	23	POSC - positionierbare Schalter	Y	SY	ABG 02 Trenner 110kV Kringel oben	INF
Trenner Q1	21	23	POSC - positionierbare Schalter	Y	SY	ABG 02 Trenner 110kV Kringel oben	INF
Trenner Q2	39	25	POSC - positionierbare Schalter	Y	SY	ABG 02 Trenner 110kV Kringel oben	INF
Trenner Q2	6	25	POSC - positionierbare Schalter	Y	SY	ABG 02 Trenner 110kV Kringel oben	INF
Trenner Q2	51	25	POSC - positionierbare Schalter	Y	SY	ABG 02 Trenner 110kV Kringel oben	INF
Trenner Q2	17	25	POSC - positionierbare Schalter	Y	SY	ABG 02 Trenner 110kV Kringel oben	INF
Trenner Q2	28	25	POSC - positionierbare Schalter	Y	SY	ABG 02 Trenner 110kV Kringel oben	INF
Trenner Q20	34	25	POSC - positionierbare Schalter	Y	SY	ABG 02 Trenner 110kV Kringel oben	INF
Trenner Q7	43	14	POSC - positionierbare Schalter	Y	SY	ABG 02 Trenner 110kV Kringel oben/unten	INF
Trenner Q7	10	14	POSC - positionierbare Schalter	Y	SY	ABG 02 Trenner 110kV Kringel oben/unten	INF
Trenner Q7	30	14	POSC - positionierbare Schalter	Y	SY	ABG 02 Trenner 110kV Kringel oben/unten	INF
Trenner Q7	21	14	POSC - positionierbare Schalter	Y	SY	ABG 02 Trenner 110kV Kringel oben/unten	INF
Trenner Q8	6	15	POSC - positionierbare Schalter	Y	SY	ABG 02 Trenner 110kV	INF
Trenner Q9	8	17	POSC - positionierbare Schalter	Y	SY	ABG 02 Trenner 110kV Kringel oben/unten	INF
Trenner Q9	19	17	POSC - positionierbare Schalter	Y	SY	ABG 02 Trenner 110kV Kringel oben/unten	INF
Trenner Q9	41	17	POSC - positionierbare Schalter	Y	SY	ABG 02 Trenner 110kV Kringel oben/unten	INF

Proprietary data, company confidential. All rights reserved.
Confie a titre de secret d'entreprise. Tous droits reservés.
Comunicado como segredo empresarial. Reservados todos os direitos.
Confiado como secreto industrial. Nos reservamos todos los derechos.
The reproduction, transmission or use of this document or its is not permitted without expres written authority.
Offenders will be liable for damages. All rights, including rights created by patent grant or registration of a utility model or design, are reserved.

Documentation structur: Standard
Source file: KO050722.ODA

Remarks	Date	Name	Norm	Date	22.07.2005	VSZ KOSICE	SIEMENS AG ISAOOLS	Substation control system 6MB Indication field	T = /BS 11
				Drawn	LANG				+
				Appr.					
				Orig./Repl. 1/Repl. by				Table	-S116 Page 11

Allocated diagram: Detailbild 1 Kosice

Type: Indication field for symbol/figure

Name	Section	Bay	Logical device	Lower limit
ROZV. BEZ SYNCHR.	R110	EA01		VYPNUTIE SYNCHRONIZACIE
S5 M	R110	EA01		S5 POLOHA VYPN./MIESTNE
S5 M	R110	EA09		S5 POLOHA VYPN./MIESTNE
S5 M	R110	EA03		S5 POLOHA VYPN./MIESTNE
S5 M	R110	EA07		S5 POLOHA VYPN./MIESTNE
S5 M	R110	EA05		S5 POLOHA VYPN./MIESTNE
Trenner Q1	R110	EA01	ODPOJOVAC Q1	SCHALTZUSTAND
Trenner Q1	R110	EA05	ODPOJOVAC Q1	SCHALTZUSTAND
Trenner Q1	R110	EA03	ODPOJOVAC Q1	SCHALTZUSTAND
Trenner Q1	R110	EA09	ODPOJOVAC Q1	SCHALTZUSTAND
Trenner Q1	R110	EA07	ODPOJOVAC Q1	SCHALTZUSTAND
Trenner Q2	R110	EA03	ODPOJOVAC Q2	SCHALTZUSTAND
Trenner Q2	R110	EA09	ODPOJOVAC Q2	SCHALTZUSTAND
Trenner Q2	R110	EA01	ODPOJOVAC Q2	SCHALTZUSTAND
Trenner Q2	R110	EA07	ODPOJOVAC Q2	SCHALTZUSTAND
Trenner Q2	R110	EA05	ODPOJOVAC Q2	SCHALTZUSTAND
Trenner Q20	R110	EA05	ODPOJOVAC Q20	SCHALTZUSTAND
Trenner Q7	R110	EA03	ODPOJOVAC Q7	SCHALTZUSTAND
Trenner Q7	R110	EA09	ODPOJOVAC Q7	SCHALTZUSTAND
Trenner Q7	R110	EA05	ODPOJOVAC Q7	SCHALTZUSTAND
Trenner Q7	R110	EA07	ODPOJOVAC Q7	SCHALTZUSTAND
Trenner Q8	R110	EA09	ODPOJOVAC ZEMNIACI Q8	SCHALTZUSTAND
Trenner Q9	R110	EA09	ODPOJOVAC Q9	SCHALTZUSTAND
Trenner Q9	R110	EA07	ODPOJOVAC Q9	SCHALTZUSTAND
Trenner Q9	R110	EA03	ODPOJOVAC Q9	SCHALTZUSTAND

Proprietary data, company confidential. All rights reserved.
Confia a tine da secret dentreprise. Tous droits reservs.
Comunicado como segredo empresarial. Reservados todos os direitos.
Confiado como secreto industrial. Nos reservamos todos los derechos.
The reproduction, transmission or use of this document or its contents is not permitted without express written authority. Offenders will be liable for damages. All rights, including rights created by patent grant or registration of a utility model or design, are reserved.

Documentation structure: Standard
Source file: KO050722.ODA

Date	22.07.2005	VSZ KOSICE	SIEMENS AG ISATOOLS	Substation control system 6MB Indication field	T = /BS 12
Drawn	LANG				+
Appr.					-S116 Page 12
Rev. / Remarks / Date / Name / Norm		Orig./Repl. 1/Repl. by		Table	

Proprietary data, company confidential. All rights reserved.
Confie a tire de secret d'entreprise. Tous droits reservis.
Comunicado como segredo empresarial. Reservados todos os direitos.
Confiado como secreto industrial. Nos reservamos todos los derechos.

The reproduction, transmission or use of this document or its
is not permitted without expres written authority.
Offenders will be liable for damages. All rights, including rights
created by patent grant or registration of a utility model or design, are reserved

Allocated diagram Detailbild 1 Kosice

Name	Position Column	Position Line	Updating on change	Sign reversal	Digits after decimal point	Overall points	Left-justified	Leading zeros	Sign chained	+- suppression	Display attribute group	Section	Bay	Logical device	Lower limit
110KV MW Feld 01 SYN Frequenz 1	67	7	Y	N	2	6	N	N	N	N	ABG 12 SY-Meßwert	R110	EA01/3	SYNCHROMESSWERTE	Frequenz 1
110KV MW Feld 01 SYN Frequenz 2	67	8	Y	N	2	6	N	N	N	N	ABG 12 SY-Meßwert	R110	EA01/3	SYNCHROMESSWERTE	Frequenz 2
110KV MW Feld 01 SYN PHASENDIFFERENZ	66	10	Y	N	1	6	N	N	N	N	ABG 12 SY-Meßwert	R110	EA01/3	SYNCHROMESSWERTE	WINKELDIFFERENZ
110KV MW Feld 01 SYN SPGS-DIFFERENZ	66	9	Y	N	1	6	N	N	N	N	ABG 12 SY-Meßwert	R110	EA01/3	SYNCHROMESSWERTE	SPANNUNGSDIFFERENZ
Blindleistung	15	8	Y	N	1	7	N	N	Y	Y	ABG 08 Meßwert	R110	EA07		VYKON JALOVY
Blindleistung	38	8	Y	N	1	7	N	N	Y	Y	ABG 08 Meßwert	R110	EA03		VYKON JALOVY
Frequenz W1	70	17	Y	N	1	5	N	N	Y	Y	ABG 08 Meßwert	R110	EA01		FREKVENCIA W1
Frequenz W2	70	25	Y	N	1	5	N	N	Y	Y	ABG 08 Meßwert	R110	EA01		FREKVENCIA W2
MTP L2	37	5	Y	N	1	7	N	N	Y	Y	ABG 08 Meßwert	R110	EA03	MESSWERTE STROM	PRUD L2
MTP L2	5	5	Y	N	1	6	N	N	Y	Y	ABG 08 Meßwert	R110	EA09	MESSWERTE STROM	PRUD L2
MTP L2	15	5	Y	N	1	7	N	N	Y	Y	ABG 08 Meßwert	R110	EA07	MESSWERTE STROM	PRUD L2
MTP L2	27	5	Y	N	1	6	N	N	Y	Y	ABG 08 Meßwert	R110	EA05	MESSWERTE STROM	PRUD L2
Spannung L1	16	4	Y	N	1	6	N	N	Y	Y	ABG 08 Meßwert	R110	EA07	MESSWERTE SPANNUNG	NAPATIE L1
Spannung L1	38	4	Y	N	1	6	N	N	Y	Y	ABG 08 Meßwert	R110	EA03	MESSWERTE SPANNUNG	NAPATIE L1
Spannung L1	27	4	Y	N	1	6	N	N	Y	Y	ABG 08 Meßwert	R110	EA05	MESSWERTE SPANNUNG	NAPATIE L1
Spannung L1	5	4	Y	N	1	6	N	N	Y	Y	ABG 08 Meßwert	R110	EA09	MESSWERTE SPANNUNG	NAPATIE L1
Spannung L1-L2	70	14	Y	N	1	5	N	N	Y	Y	ABG 08 Meßwert	R110	EA01	MESSW. SPANNUNG W1	NAPATIE L1-L2
Spannung L1-L2 W2	70	22	Y	N	1	5	N	N	Y	Y	ABG 08 Meßwert	R110	EA01	MESSW. SPANNUNG W2	NAPATIE L1-L2
Spannung L1-L3	70	15	Y	N	1	5	N	N	Y	Y	ABG 08 Meßwert	R110	EA01	MESSW. SPANNUNG W1	NAPATIE L1-L3
Spannung L1-L3 W2	70	23	Y	N	1	5	N	N	Y	Y	ABG 08 Meßwert	R110	EA01	MESSW. SPANNUNG W2	NAPATIE L1-L3
Spannung L2-L3	70	16	Y	N	1	5	N	N	Y	Y	ABG 08 Meßwert	R110	EA01	MESSW. SPANNUNG W1	NAPATIE L2-L3
Spannung L2-L3 W2	70	24	Y	N	1	5	N	N	Y	Y	ABG 08 Meßwert	R110	EA01	MESSW. SPANNUNG W2	NAPATIE L2-L3
WIRKLEISTUNG	5	7	Y	N	1	6	N	N	Y	Y	ABG 08 Meßwert	R110	EA09		VYKON CINNY
WIRKLEISTUNG	38	7	Y	N	1	7	N	N	Y	Y	ABG 08 Meßwert	R110	EA03		VYKON CINNY
WIRKLEISTUNG	15	7	Y	N	1	7	N	N	Y	Y	ABG 08 Meßwert	R110	EA07		VYKON CINNY

Documentation structur: Standard
Source file: KO050722.ODA

Date	22.07.2005	VSZ KOSICE	SIEMENS AG ISATOOLS
Drawn	LANG		
Appr.			
Remarks	Date	Name Norm	Orig./Repl. 1/Repl. by

Substation control system 6MB
Analog value field
Table

T = /BS 13
+
-S116
Page 13

Detailbild 2 Kosice

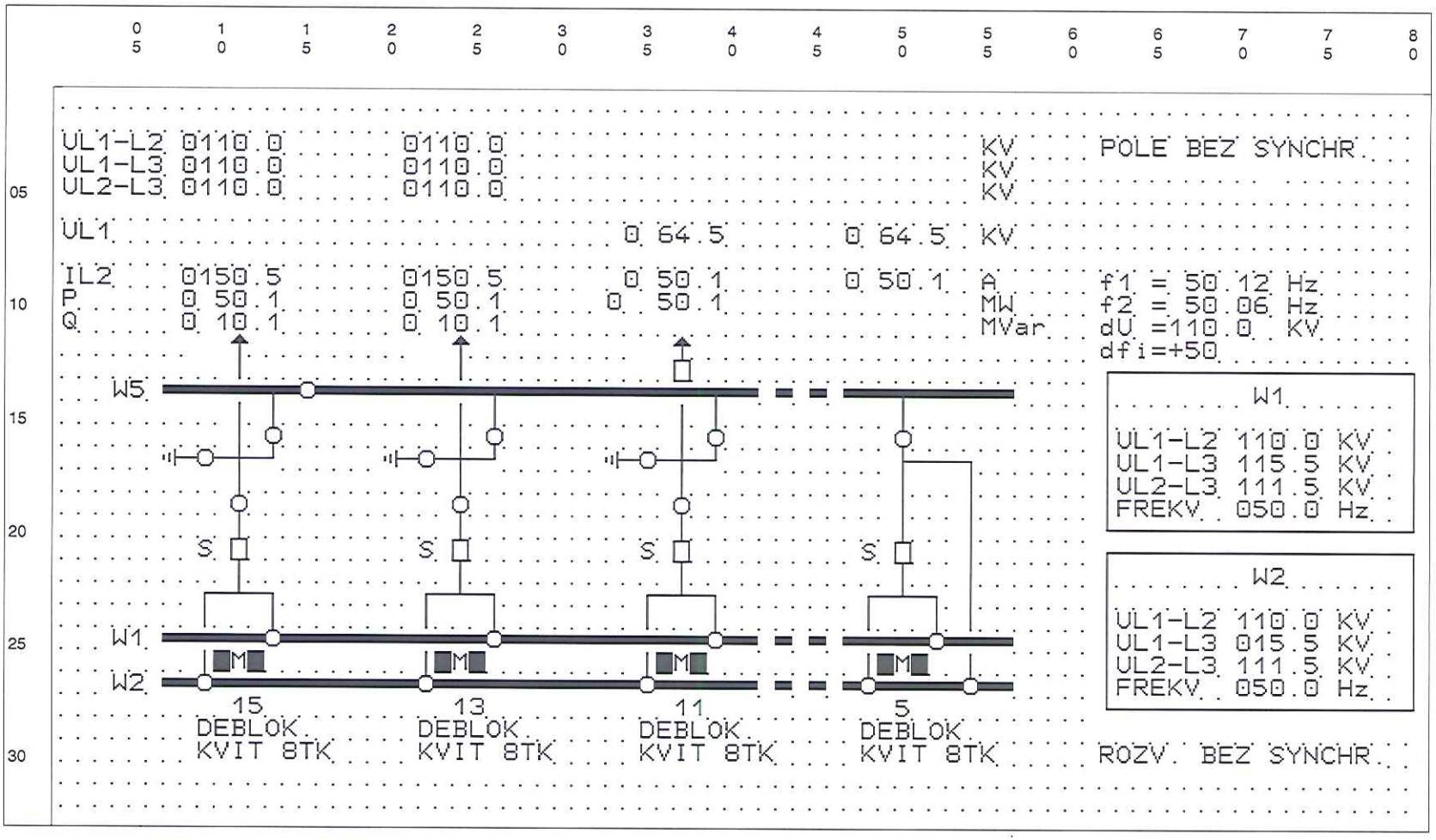

The reproduction, transmission or use of this document or its contents is not permitted without express written authority. Offenders will be liable for damages. All rights, including rights created by patent grant or registration of a utility model or design, are reserved.
Proprietary data, company confidential. All rights reserved. Confie a titre de secret d'entreprise. Tous droits réservés. Comunicado como segredo empresarial. Reservados todos os direitos. Confiado como secreto industrial. Nos reservamos todos los derechos.

Documentation structur: Standard
Source file: KO050722.ODA

Rev.	Remarks	Date	Name	Date	22.07.2005	VSZ KOSICE	SIEMENS AG ISAOOLS	Substation control system 6MB Detailed diagram	T = /BS 14
				Drawn	LANG				+
				Appr.					
				Norm		Orig./Repl. 1/Repl. by		Table	-S116 Page 14

Allocated diagram: Detailbild 2 Kosice

Type: Indication field for symbol/figure

Name	Position Column	Position Line	Position recognition	Acknowledgeable	Display as	Display attribute group	Allocation of:
Deblok	9	29		N	SY	ABG 22 Kom/Geh/Schwarz/Cyan	INF
Deblok	48	29		N	SY	ABG 22 Kom/Geh/Schwarz/Cyan	INF
Deblok	22	29		N	SY	ABG 22 Kom/Geh/Schwarz/Cyan	INF
Deblok	35	29		N	SY	ABG 22 Kom/Geh/Schwarz/Cyan	INF
Deblokacia blokovania	49	26	BLOK - positionierbare SF6 Block.	Y	SY	ABG 21 8TK	INF
Deblokacia blokovania	36	26	BLOK - positionierbare SF6 Block.	Y	SY	ABG 21 8TK	INF
Deblokacia blokovania	23	26	BLOK - positionierbare SF6 Block.	Y	SY	ABG 21 8TK	INF
Deblokacia blokovania	10	26	BLOK - positionierbare SF6 Block.	Y	SY	ABG 21 8TK	INF
Feldsperre	9	12	POAU - postionierbare Feldsperre	N	FIG	ABG 14 Feldsperre gruen 110KV	INF
Feldsperre	48	15	POAU - postionierbare Feldsperre	N	FIG	ABG 14 Feldsperre gruen 110KV	INF
Feldsperre	22	12	POAU - postionierbare Feldsperre	N	FIG	ABG 14 Feldsperre gruen 110KV	INF
Feldsperre	35	12	POAU - postionierbare Feldsperre	N	FIG	ABG 14 Feldsperre gruen 110KV	INF
KVIT 8TK	48	30		Y	SY	ABG 23 Kom/Geh Quitt	INF
KVIT 8TK	35	30		Y	SY	ABG 23 Kom/Geh Quitt	INF
KVIT 8TK	9	30		Y	SY	ABG 23 Kom/Geh Quitt	INF
KVIT 8TK	22	30		Y	SY	ABG 23 Kom/Geh Quitt	INF
Leistungsschalter Gegenseite Feld 11	37	13		Y	SY	ABG 02 Leistungsschalter 110kV	INF
Leistungsschalter QM	37	21	POINTERN - positionierbare LS/Intern	Y	SY	ABG 02 Leistungsschalter 110kV	INF
Leistungsschalter QM	11	21	POINTERN - positionierbare LS/Intern	Y	SY	ABG 02 Leistungsschalter 110kV	INF
Leistungsschalter QM	50	21	POINTERN - positionierbare LS/Intern	Y	SY	ABG 02 Leistungsschalter 110kV	INF
Leistungsschalter QM	24	21	POINTERN - positionierbare LS/Intern	Y	SY	ABG 02 Leistungsschalter 110kV	INF
POLE BEZ SYNCHR.	62	3		N	SY	ABG 22 Kom/Geh/Schwarz/Cyan	INF
Quitt SF6	51	26	KVIT - postionierbare SF6 Quittierung	Y	SY	ABG 21 8TK	INF
Quitt SF6	38	26	KVIT - postionierbare SF6 Quittierung	Y	SY	ABG 21 8TK	INF
Quitt SF6	25	26	KVIT - postionierbare SF6 Quittierung	Y	SY	ABG 21 8TK	INF
Quitt SF6	12	26	KVIT - postionierbare SF6 Quittierung	Y	SY	ABG 21 8TK	INF
ROZV. BEZ SYNCHR.	62	30		N	SY	ABG 22 Kom/Geh/Schwarz/Cyan	INF
S5 M	50	26		N	SY	ABG 24 Kom/Geh/Weiß/Schwarz	INF
S5 M	37	26		N	SY	ABG 24 Kom/Geh/Weiß/Schwarz	INF
S5 M	11	26		N	SY	ABG 24 Kom/Geh/Weiß/Schwarz	INF
S5 M	24	26		N	SY	ABG 24 Kom/Geh/Weiß/Schwarz	INF
Trenner Q1	39	25	POSC - positionierbare Schalter	Y	SY	ABG 02 Trenner 110kV Kringel oben	INF

Proprietary data, company confidential. All rights reserved.
Confie a titre de secret d'entreprise. Tous droits réservés.
Comunicado como segredo empresarial. Reservados todos os direitos.
Confiado como secreto industrial. Nos reservamos todos los derechos.
The reproduction, transmission or use of theis document or its is not permitted without expres written authority.
Offenders will be liable for damages. All rights, including rights created by patent grant or registration of a utility model or design, are reserved.

Documentation structur: Standard
Source file: KO050722.ODA

			Date	22.07.2005	VSZ KOSICE	SIEMENS AG ISAIOOLS	Substation control system 6MB Indication field
			Drawn	LANG			
			Appr.				
F	Remarks	Date	Name	Norm	Orig./Repl. 1/Repl. by		Table

T = /BS 15
+
-S116
Page 15

Allocated diagram Detailbild 2 Kosice

Type: Indication field for symbol/figure

Name	Section	Bay	Logical device	Lower limit
Deblok	R110	EA15		PREVADZKA S1
Deblok	R110	EA05		PREVADZKA S1
Deblok	R110	EA13		PREVADZKA S1
Deblok	R110	EA11		PREVADZKA S1
Deblokacia blokovania	R110	EA05		DEBLOKACIA BLOKOVANIA
Deblokacia blokovania	R110	EA11		DEBLOKACIA BLOKOVANIA
Deblokacia blokovania	R110	EA13		DEBLOKACIA BLOKOVANIA
Deblokacia blokovania	R110	EA15		DEBLOKACIA BLOKOVANIA
Feldsperre	R110	EA15		ZABLOKOVANI POLE
Feldsperre	R110	EA05		ZABLOKOVANI POLE
Feldsperre	R110	EA13		ZABLOKOVANI POLE
Feldsperre	R110	EA11		ZABLOKOVANI POLE
KVIT 8TK	R110	EA05		KVIT 8TK
KVIT 8TK	R110	EA11		KVIT 8TK
KVIT 8TK	R110	EA15		KVIT 8TK
KVIT 8TK	R110	EA13		KVIT 8TK
Leistungsschalter Gegenseite Feld 11	T05-13	POLE11	PROTILAHLY VYPINAC	SCHALTZUSTAND
Leistungsschalter QM	R110	EA11	VYPINAC Q0	SCHALTZUSTAND
Leistungsschalter QM	R110	EA15	VYPINAC Q0	SCHALTZUSTAND
Leistungsschalter QM	R110	EA05	VYPINAC Q0	SCHALTZUSTAND
Leistungsschalter QM	R110	EA13	VYPINAC Q0	SCHALTZUSTAND
POLE BEZ SYNCHR.	R110	SPOL		VYPNUTIE SYNCHRONIZACIE
Quitt SF6	R110	EA05		KVITOVANIE
Quitt SF6	R110	EA11		KVITOVANIE
Quitt SF6	R110	EA13		KVITOVANIE
Quitt SF6	R110	EA15		KVITOVANIE
ROZV. BEZ SYNCHR.	R110	EA01		VYPNUTIE SYNCHRONIZACIE
S5 M	R110	EA05		S5 POLOHA VYPN./MIESTNE
S5 M	R110	EA11		S5 POLOHA VYPN./MIESTNE
S5 M	R110	EA15		S5 POLOHA VYPN./MIESTNE
S5 M	R110	EA13		S5 POLOHA VYPN./MIESTNE
Trenner Q1	R110	EA11	ODPOJOVAC Q1	SCHALTZUSTAND

Proprietary data, company confidential. All rights reserved.
Confie a titre de secret d'entreprise. Tous droits réservés.
Comunicado como segredo empresarial. Reservados todos os direitos.
Confiado como secreto industrial. Nos reservamos todos los derechos.

The reproduction, transmission or use of this document or its is not permitted without express written authority. Offenders will be liable for damages. All rights, including rights created by patent grant or registration of a utility model or design, are reserved.

Documentation structur: Standard
Source file: KO050722.ODA

Rev.	Remarks	Date	Name	Date	22.07.2005
				Drawn	LANG
				Appr.	
				Norm	

VSZ KOSICE

Orig./Repl. 1/Repl. by

SIEMENS AG
ISA TOOLS

Substation control system 6MB
Indication field

Table

T = /BS 16
+

-S116

Allocated diagram: Detailbild 2 Kosice

Type: Indication field for symbol/figure

Name	Position Column	Position Line	Position recognition	Acknowledgeable	Display as	Display attribute group	Allocation of:
Trenner Q1	52	25	POSC - positionierbare Schalter	Y	SY	ABG 02 Trenner 110kV Kringel oben	INF
Trenner Q1	26	25	POSC - positionierbare Schalter	Y	SY	ABG 02 Trenner 110kV Kringel oben	INF
Trenner Q1	13	25	POSC - positionierbare Schalter	Y	SY	ABG 02 Trenner 110kV Kringel oben	INF
Trenner Q2	48	27	POSC - positionierbare Schalter	Y	SY	ABG 02 Trenner 110kV Kringel oben	INF
Trenner Q2	9	27	POSC - positionierbare Schalter	Y	SY	ABG 02 Trenner 110kV Kringel oben	INF
Trenner Q2	35	27	POSC - positionierbare Schalter	Y	SY	ABG 02 Trenner 110kV Kringel oben	INF
Trenner Q2	22	27	POSC - positionierbare Schalter	Y	SY	ABG 02 Trenner 110kV Kringel oben	INF
Trenner Q20	54	27	POSC - positionierbare Schalter	Y	SY	ABG 02 Trenner 110kV Kringel oben	INF
Trenner Q7	13	16	POSC - positionierbare Schalter	Y	SY	ABG 02 Trenner 110kV Kringel oben/unten	INF
Trenner Q7	39	16	POSC - positionierbare Schalter	Y	SY	ABG 02 Trenner 110kV Kringel oben/unten	INF
Trenner Q7	26	16	POSC - positionierbare Schalter	Y	SY	ABG 02 Trenner 110kV Kringel oben/unten	INF
Trenner Q7	50	16	POSC - positionierbare Schalter	Y	SY	ABG 02 Trenner 110kV Kringel oben/unten	INF
Trenner Q71	15	14	POSC - positionierbare Schalter	Y	SY	ABG 02 Trenner 110kV ohne Kringel	INF
Trenner Q8	35	17	POSC - positionierbare Schalter	Y	SY	ABG 02 Trenner 110kV	INF
Trenner Q8	22	17	POSC - positionierbare Schalter	Y	SY	ABG 02 Trenner 110kV	INF
Trenner Q8	9	17	POSC - positionierbare Schalter	Y	SY	ABG 02 Trenner 110kV	INF
Trenner Q9	11	19	POSC - positionierbare Schalter	Y	SY	ABG 02 Trenner 110kV Kringel oben/unten	INF
Trenner Q9	24	19	POSC - positionierbare Schalter	Y	SY	ABG 02 Trenner 110kV Kringel oben/unten	INF
Trenner Q9	37	19	POSC - positionierbare Schalter	Y	SY	ABG 02 Trenner 110kV Kringel oben/unten	INF

Proprietary data, company confidential. All rights reserved
Confia a tiho de secret dentreprise. Tous droits reservs.
Comunicado como segredo empresarial. Reservados todos os direitos.
Contiado como secreto industrial. Nos reservamos todos los derechos.

The reproduction, transmission or use of this document or its contents is not permitted without express written authority. Offenders will be liable for damages. All rights, including rights created by patent grant or registration of a utility model or design, are reserved

Documentation structur: Standard
Source file: KO050722.ODA

Remarks	Date	Name	Norm		Date	22.07.2005	VSZ KOSICE	SIEMENS AG ISATOOLS	Substation control system 6MB Indication field
					Drawn	LANG			
					Appr.				
					Orig./Repl. 1/Repl. by				Table

T = /BS 17
+
-S116
Page 7

Allocated diagram: Detailbild 2 Kosice

Type: Indication field for symbol/figure

Name	Section	Bay	Logical device	Lower limit
Trenner Q1	R110	EA05	ODPOJOVAC Q1	SCHALTZUSTAND
Trenner Q1	R110	EA13	ODPOJOVAC Q1	SCHALTZUSTAND
Trenner Q1	R110	EA15	ODPOJOVAC Q1	SCHALTZUSTAND
Trenner Q2	R110	EA05	ODPOJOVAC Q2	SCHALTZUSTAND
Trenner Q2	R110	EA15	ODPOJOVAC Q2	SCHALTZUSTAND
Trenner Q2	R110	EA11	ODPOJOVAC Q2	SCHALTZUSTAND
Trenner Q2	R110	EA13	ODPOJOVAC Q2	SCHALTZUSTAND
Trenner Q20	R110	EA05	ODPOJOVAC Q20	SCHALTZUSTAND
Trenner Q7	R110	EA15	ODPOJOVAC Q7	SCHALTZUSTAND
Trenner Q7	R110	EA11	ODPOJOVAC Q7	SCHALTZUSTAND
Trenner Q7	R110	EA13	ODPOJOVAC Q7	SCHALTZUSTAND
Trenner Q7	R110	EA05	ODPOJOVAC Q7	SCHALTZUSTAND
Trenner Q71	R110	EA15	ODPOJOVAC POM.PRIP.Q71	SCHALTZUSTAND
Trenner Q8	R110	EA11	ODPOJOVAC ZEMNIACI Q8	SCHALTZUSTAND
Trenner Q8	R110	EA13	ODPOJOVAC ZEMNIACI Q8	SCHALTZUSTAND
Trenner Q8	R110	EA15	ODPOJOVAC ZEMNIACI Q8	SCHALTZUSTAND
Trenner Q9	R110	EA15	ODPOJOVAC Q9	SCHALTZUSTAND
Trenner Q9	R110	EA13	ODPOJOVAC Q9	SCHALTZUSTAND
Trenner Q9	R110	EA11	ODPOJOVAC Q9	SCHALTZUSTAND

Proprietary data, company confidential. All rights reserved.
Confie a tire de secret d'entreprise. Tous droits reserves.
Comunicado como segredo empresarial. Reservados todos os direitos.
Confiado como secreto industrial. Nos reservamos todos los derechos.

The reproduction, transmission or use of this document or its contents is not permitted without express written authority. Offenders will be liable for damages. All rights, including rights created by patent grant or registration of a utility model or design, are reserved.

Documentation structure: Standard
Source file: KO050722.ODA

Rev.	Remarks	Date	Name	Norm
			Date	22.07.2005
			Drawn	LANG
			Appr.	

VSZ KOSICE

Orig./Repl. 1/Repl. by

SIEMENS AG
ISAOOLS

Substation control system 6MB
Indication field

Table

T = /BS 18
+

-S116

Page 18

Allocated diagram Detailbild 2 Kosice

Name	Position Column	Position Line	Updating on change	Sign reversal	Digits after decimal point	Overall points	Left-justified	Leading zeros	Sign chained	+- suppression	Display attribute group	Section	Bay	Logical device	Lower limit
110KV MW Feld 01 SYN Frequenz 1	67	9	Y	N	2	6	N	N	N	N	ABG 12 SY-Meßwert	R110	EA01/3	SYNCHROMESSWERTE	Frequenz 1
110KV MW Feld 01 SYN Frequenz 2	67	10	Y	N	2	6	N	N	N	N	ABG 12 SY-Meßwert	R110	EA01/3	SYNCHROMESSWERTE	Frequenz 2
110KV MW Feld 01 SYN PHASENDIFFERENZ	66	12	Y	N	1	6	N	N	N	N	ABG 12 SY-Meßwert	R110	EA01/3	SYNCHROMESSWERTE	WINKELDIFFERENZ
110KV MW Feld 01 SYN SPGS-DIFFERENZ	66	11	Y	N	1	6	N	N	N	N	ABG 12 SY-Meßwert	R110	EA01/3	SYNCHROMESSWERTE	SPANNUNGSDIFFERENZ
Blindleistung	21	11	Y	N	1	6	N	N	Y	Y	ABG 08 Meßwert	R110	EA13		VYKON JALOVY
Blindleistung	8	11	Y	N	1	6	N	N	Y	Y	ABG 08 Meßwert	R110	EA15		VYKON JALOVY
Frequenz W1	70	19	Y	N	1	5	N	N	Y	Y	ABG 08 Meßwert	R110	EA01		FREKVENCIA W1
Frequenz W2	70	27	Y	N	1	5	N	N	Y	Y	ABG 08 Meßwert	R110	EA01		FREKVENCIA W2
MTP L2	21	9	Y	N	1	6	N	N	Y	Y	ABG 08 Meßwert	R110	EA13	MESSWERTE STROM	PRUD L2
MTP L2	47	9	Y	N	1	6	N	N	Y	Y	ABG 08 Meßwert	R110	EA05	MESSWERTE STROM	PRUD L2
MTP L2	8	9	Y	N	1	6	N	N	Y	Y	ABG 08 Meßwert	R110	EA15	MESSWERTE STROM	PRUD L2
MTP L2	34	9	Y	N	1	6	N	N	Y	Y	ABG 08 Meßwert	R110	EA11	MESSWERTE STROM	PRUD L2
Spannung L1	47	7	Y	N	1	6	N	N	Y	Y	ABG 08 Meßwert	R110	EA05	MESSWERTE SPANNUNG	NAPATIE L1
Spannung L1	34	7	Y	N	1	6	N	N	Y	Y	ABG 08 Meßwert	R110	EA11	MESSWERTE SPANNUNG	NAPATIE L1
Spannung L1-L2	8	3	Y	N	1	6	N	N	Y	Y	ABG 08 Meßwert	R110	EA15	MESSWERTE SPANNUNG	NAPATIE L1-L2
Spannung L1-L2	21	3	Y	N	1	6	N	N	Y	Y	ABG 08 Meßwert	R110	EA13	MESSWERTE SPANNUNG	NAPATIE L1-L2
Spannung L1-L2	70	16	Y	N	1	5	N	N	Y	Y	ABG 08 Meßwert	R110	EA01	MESSW. SPANNUNG W1	NAPATIE L1-L2
Spannung L1-L2 W2	70	24	Y	N	1	5	N	N	Y	Y	ABG 08 Meßwert	R110	EA01	MESSW. SPANNUNG W2	NAPATIE L1-L2
Spannung L1-L3	8	4	Y	N	1	6	N	N	Y	Y	ABG 08 Meßwert	R110	EA15	MESSWERTE SPANNUNG	NAPATIE L1-L3
Spannung L1-L3	70	17	Y	N	1	5	N	N	Y	Y	ABG 08 Meßwert	R110	EA01	MESSW. SPANNUNG W1	NAPATIE L1-L3
Spannung L1-L3	21	4	Y	N	1	6	N	N	Y	Y	ABG 08 Meßwert	R110	EA13	MESSWERTE SPANNUNG	NAPATIE L1-L3
Spannung L1-L3 W2	70	25	Y	N	1	5	N	N	Y	Y	ABG 08 Meßwert	R110	EA01	MESSW. SPANNUNG W2	NAPATIE L1-L3
Spannung L2-L3	21	5	Y	N	1	6	N	N	Y	Y	ABG 08 Meßwert	R110	EA13	MESSWERTE SPANNUNG	NAPATIE L2-L3
Spannung L2-L3	8	5	Y	N	1	6	N	N	Y	Y	ABG 08 Meßwert	R110	EA15	MESSWERTE SPANNUNG	NAPATIE L2-L3
Spannung L2-L3	70	18	Y	N	1	5	N	N	Y	Y	ABG 08 Meßwert	R110	EA01	MESSW. SPANNUNG W1	NAPATIE L2-L3
Spannung L2-L3 W2	70	26	Y	N	1	5	N	N	Y	Y	ABG 08 Meßwert	R110	EA01	MESSW. SPANNUNG W2	NAPATIE L2-L3
Wirkleistung	21	10	Y	N	1	6	N	N	Y	Y	ABG 08 Meßwert	R110	EA13		VYKON CINNY
Wirkleistung	8	10	Y	N	1	6	N	N	Y	Y	ABG 08 Meßwert	R110	EA15		VYKON CINNY
WIRKLEISTUNG	33	10	Y	N	1	7	N	N	Y	Y	ABG 08 Meßwert	R110	EA11		VYKON CINNY

Proprietary data, company confidential. All rights reserved.
Confe a ltre de secret d'entreprise. Tous droits rservs.
Comunicado como segredo empresarial. Reservados todos os direitos.
Confiado como secreto industrial. Nos reservamos todos los derechos.

The reproduction, transmission or use of this document or its contents is not permitted without express written authority. Offenders will be liable for damages. All rights, including rights created by patent grant or registration of a utility model or design, are reserved.

Documentation structure: Standard
Source file: KO050722.ODA

Date	22.07.2005	VSZ KOSICE	SIEMENS AG ISATOOLS
Drawn	LANG		
Appr.			
Remarks	Date	Name	Norm
			Orig./Repl. 1/Repl. by

Substation control system 6MB
Analog value field
Table

T = /BS 19
+
-S116
Page 9

Detailbild 3 Kosice

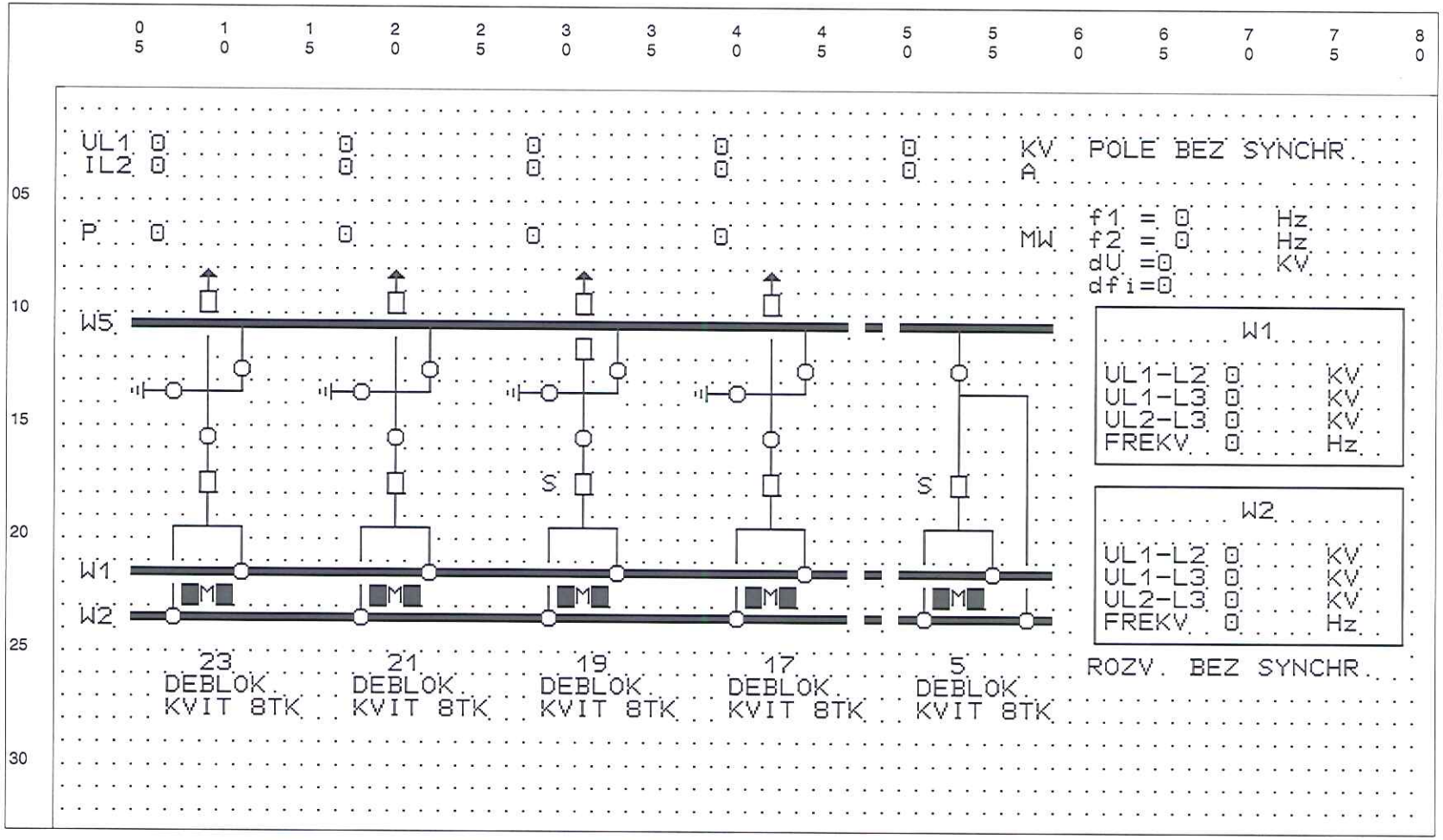

Proprietary data, company confidential. All rights reserved
Confie a titre de secret d'entreprise. Tous droits réservés
Comunicado como segredo empresarial. Reservados todos os direitos.
Confiado como secreto industrial. Nos reservamos todos los derechos.

The reproduction, transmission or use of this document or its contents is not permitted without express written authority. Offenders will be liable for damages. All rights, including rights created by patent grant or registration of a utility model or design, are reserved.

Documentation structur: Standard
Source file: KO050722.ODA

Rev.	Remarks	Date	Name	Norm	Date 22.07.2005	Drawn LANG	Appr.	Orig./Repl. 1/Repl. by

VSZ KOSICE

SIEMENS AG
ISAOOLS

Substation control system 6MB
Detailed diagram
Table

T = /BS 20
+
-S116
Page 20

Allocated diagram Detailbild 3 Kosice

Type: Indication field for symbol/figure

Name	Position Column	Position Line	Position recognition	Acknowledgeable	Display as	Display attribute group	Allocation of:
Deblok	51	27		N	SY	ABG 22 Kom/Geh/Schwarz/Cyan	INF
Deblok	40	27		N	SY	ABG 22 Kom/Geh/Schwarz/Cyan	INF
Deblok	29	27		N	SY	ABG 22 Kom/Geh/Schwarz/Cyan	INF
Deblok	18	27		N	SY	ABG 22 Kom/Geh/Schwarz/Cyan	INF
Deblok	7	27		N	SY	ABG 22 Kom/Geh/Schwarz/Cyan	INF
Deblokacia blokovania	52	23	BLOK - positionierbare SF6 Block.	Y	SY	ABG 21 8TK	INF
Deblokacia blokovania	8	23	BLOK - positionierbare SF6 Block.	Y	SY	ABG 21 8TK	INF
Deblokacia blokovania	41	23	BLOK - positionierbare SF6 Block.	Y	SY	ABG 21 8TK	INF
Deblokacia blokovania	30	23	BLOK - positionierbare SF6 Block.	Y	SY	ABG 21 8TK	INF
Deblokacia blokovania	19	23	BLOK - positionierbare SF6 Block.	Y	SY	ABG 21 8TK	INF
Feldsperre	29	9	POAU - postionierbare Feldsperre	N	FIG	ABG 14 Feldsperre gruen 110KV	INF
Feldsperre	7	9	POAU - postionierbare Feldsperre	N	FIG	ABG 14 Feldsperre gruen 110KV	INF
Feldsperre	51	12	POAU - postionierbare Feldsperre	N	FIG	ABG 14 Feldsperre gruen 110KV	INF
Feldsperre	40	9	POAU - postionierbare Feldsperre	N	FIG	ABG 14 Feldsperre gruen 110KV	INF
Feldsperre	18	9	POAU - postionierbare Feldsperre	N	FIG	ABG 14 Feldsperre gruen 110KV	INF
KVIT 8TK	29	28		Y	SY	ABG 23 Kom/Geh Quitt	INF
KVIT 8TK	40	28		Y	SY	ABG 23 Kom/Geh Quitt	INF
KVIT 8TK	18	28		Y	SY	ABG 23 Kom/Geh Quitt	INF
KVIT 8TK	7	28		Y	SY	ABG 23 Kom/Geh Quitt	INF
KVIT 8TK	51	28		Y	SY	ABG 23 Kom/Geh Quitt	INF
Leistungsschalter Gegenseite Feld 17	42	10		Y	SY	ABG 02 Leistungsschalter 110kV	INF
Leistungsschalter Gegenseite Feld 19	31	10		Y	SY	ABG 02 Leistungsschalter 110kV	INF
Leistungsschalter Gegenseite Feld 21	20	10		Y	SY	ABG 02 Leistungsschalter 110kV	INF
Leistungsschalter Gegenseite Feld 23	9	10		Y	SY	ABG 02 Leistungsschalter 110kV	INF
Leistungsschalter Q0	31	18	POINTERN - positionierbare LS/Intern	Y	SY	ABG 02 Leistungsschalter 110kV	INF
Leistungsschalter Q01	31	12	POSC - positionierbare Schalter	Y	SY	ABG 02 Leistungsschalter 110kV	INF
Leistungsschalter QM	9	18	POSC - positionierbare Schalter	Y	SY	ABG 02 Leistungsschalter 110kV	INF
Leistungsschalter QM	53	18	POINTERN - positionierbare LS/Intern	Y	SY	ABG 02 Leistungsschalter 110kV	INF
Leistungsschalter QM	20	18	POSC - positionierbare Schalter	Y	SY	ABG 02 Leistungsschalter 110kV	INF
Leistungsschalter QM	42	18	POSC - positionierbare Schalter	Y	SY	ABG 02 Leistungsschalter 110kV	INF
POLE BEZ SYNCHR.	61	3		N	SY	ABG 22 Kom/Geh/Schwarz/Cyan	INF
Quitt SF6	43	23	KVIT - postionierbare SF6 Quittierung	Y	SY	ABG 21 8TK	INF

Proprietary data, company confidential. All rights reserved.
Confia a tirea da secret d'entreprise. Tous droits r.serv.s.
Comunicado como segredo empresarial. Reservados todos os direitos.
Confiado como secreto industrial. Nos reservamos todos los derechos.
The reproduction, transmission or use of this document or its contents is not permitted without express written authority. Offenders will be liable for damages. All rights, including rights created by patent grant or registration of a utility model or design, are reserved.

Documentation structure: Standard
Source file: KO050722.ODA

Date	22.07.2005	VSZ KOSICE	SIEMENS AG ISATOOLS
Drawn	LANG		
Appr.			
Remarks	Date	Name	Norm
		Orig./Repl. 1/Repl. by	

Substation control system 6MB
Indication field
Table

T = /BS 21
+
-S116
Page 21

Allocated diagram: Detailbild 3 Kosice

Type: Indication field for symbol/figure

Name	Section	Bay	Logical device	Lower limit
Deblok	R110	EA05		PREVADZKA S1
Deblok	R110	EA17		PREVADZKA S1
Deblok	R110	EA19		PREVADZKA S1
Deblok	R110	EA21		PREVADZKA S1
Deblok	R110	EA23		PREVADZKA S1
Deblokacia blokovania	R110	EA05		DEBLOKACIA BLOKOVANIA
Deblokacia blokovania	R110	EA23		DEBLOKACIA BLOKOVANIA
Deblokacia blokovania	R110	EA17		DEBLOKACIA BLOKOVANIA
Deblokacia blokovania	R110	EA19		DEBLOKACIA BLOKOVANIA
Deblokacia blokovania	R110	EA21		DEBLOKACIA BLOKOVANIA
Feldsperre	R110	EA19		ZABLOKOVANI POLE
Feldsperre	R110	EA23		ZABLOKOVANI POLE
Feldsperre	R110	EA05		ZABLOKOVANI POLE
Feldsperre	R110	EA17		ZABLOKOVANI POLE
Feldsperre	R110	EA21		ZABLOKOVANI POLE
KVIT 8TK	R110	EA19		KVIT 8TK
KVIT 8TK	R110	EA17		KVIT 8TK
KVIT 8TK	R110	EA21		KVIT 8TK
KVIT 8TK	R110	EA23		KVIT 8TK
KVIT 8TK	R110	EA05		KVIT 8TK
Leistungsschalter Gegenseite Feld 17	T40-10	POLE17	PROTILAHLY VYPINAC	SCHALTZUSTAND
Leistungsschalter Gegenseite Feld 19	T02-16	POLE19	PROTILAHLY VYPINAC	SCHALTZUSTAND
Leistungsschalter Gegenseite Feld 21	T??-??	POLE21	PROTILAHLY VYPINAC	SCHALTZUSTAND
Leistungsschalter Gegenseite Feld 23	T50-27	POLE23	PROTILAHLY VYPINAC	SCHALTZUSTAND
Leistungsschalter Q0	R110	EA19	VYPINAC Q0	SCHALTZUSTAND
Leistungsschalter Q01	R110	EA19	VYPINAC Q01	SCHALTZUSTAND
Leistungsschalter QM	R110	EA23	VYPINAC Q0	SCHALTZUSTAND
Leistungsschalter QM	R110	EA05	VYPINAC Q0	SCHALTZUSTAND
Leistungsschalter QM	R110	EA21	VYPINAC Q0	SCHALTZUSTAND
Leistungsschalter QM	R110	EA17	VYPINAC Q0	SCHALTZUSTAND
POLE BEZ SYNCHR.	R110	SPOL		VYPNUTIE SYNCHRONIZACIE
Quitt SF6	R110	EA17		KVITOVANIE

Proprietary data, company confidential. All rights reserved.
Confie a titre de secret d'entreprise. Tous droits réservés.
Comunicado como segredo empresarial. Reservados todos os direitos.
Confiado como secreto industrial. Nos reservamos todos los derechos.

The reproduction, transmission or use of this document or its is not permitted without express written authority.
Offenders will be liable for damages. All rights, including rights created by patent grant or registration of a utility model or design, are reserved.

Documentation structur: Standard
Source file: KO050722.ODA

Rev.	Remarks	Date	Name	Date	22.07.2005	VSZ KOSICE	SIEMENS AG ISA TOOLS	Substation control system 6MB Indication field	T = /BS 22
				Drawn	LANG				+
				Appr.					
				Norm		Orig./Repl. 1/Repl. by		Table	-S116 Page 22

Allocated diagram Detailbild 3 Kosice

Type: Indication field for symbol/figure

Name	Position Column	Position Line	Position recognition	Acknowledgeable	Display as	Display attribute group	Allocation of:
Quitt SF6	10	23	KVIT - postionierbare SF6 Quittierung	Y	SY	ABG 21 8TK	INF
Quitt SF6	32	23	KVIT - postionierbare SF6 Quittierung	Y	SY	ABG 21 8TK	INF
Quitt SF6	54	23	KVIT - postionierbare SF6 Quittierung	Y	SY	ABG 21 8TK	INF
Quitt SF6	21	23	KVIT - postionierbare SF6 Quittierung	Y	SY	ABG 21 8TK	INF
ROZV. BEZ SYNCHR.	61	26		N	SY	ABG 22 Kom/Geh/Schwarz/Cyan	INF
S5 M	42	23		N	SY	ABG 24 Kom/Geh/Weiß/Schwarz	INF
S5 M	20	23		N	SY	ABG 24 Kom/Geh/Weiß/Schwarz	INF
S5 M	31	23		N	SY	ABG 24 Kom/Geh/Weiß/Schwarz	INF
S5 M	53	23		N	SY	ABG 24 Kom/Geh/Weiß/Schwarz	INF
S5 M	9	23		N	SY	ABG 24 Kom/Geh/Weiß/Schwarz	INF
Trenner Q1	33	22	POSC - positionierbare Schalter	Y	SY	ABG 02 Trenner 110kV Kringel oben	INF
Trenner Q1	11	22	POSC - positionierbare Schalter	Y	SY	ABG 02 Trenner 110kV Kringel oben	INF
Trenner Q1	22	22	POSC - positionierbare Schalter	Y	SY	ABG 02 Trenner 110kV Kringel oben	INF
Trenner Q1	44	22	POSC - positionierbare Schalter	Y	SY	ABG 02 Trenner 110kV Kringel oben	INF
Trenner Q1	55	22	POSC - positionierbare Schalter	Y	SY	ABG 02 Trenner 110kV Kringel oben	INF
Trenner Q2	18	24	POSC - positionierbare Schalter	Y	SY	ABG 02 Trenner 110kV Kringel oben	INF
Trenner Q2	51	24	POSC - positionierbare Schalter	Y	SY	ABG 02 Trenner 110kV Kringel oben	INF
Trenner Q2	29	24	POSC - positionierbare Schalter	Y	SY	ABG 02 Trenner 110kV Kringel oben	INF
Trenner Q2	7	24	POSC - positionierbare Schalter	Y	SY	ABG 02 Trenner 110kV Kringel oben	INF
Trenner Q2	40	24	POSC - positionierbare Schalter	Y	SY	ABG 02 Trenner 110kV Kringel oben	INF
Trenner Q20	57	24	POSC - positionierbare Schalter	Y	SY	ABG 02 Trenner 110kV Kringel oben	INF
Trenner Q7	11	13	POSC - positionierbare Schalter	Y	SY	ABG 02 Trenner 110kV Kringel oben/unten	INF
Trenner Q7	22	13	POSC - positionierbare Schalter	Y	SY	ABG 02 Trenner 110kV Kringel oben/unten	INF
Trenner Q7	53	13	POSC - positionierbare Schalter	Y	SY	ABG 02 Trenner 110kV Kringel oben/unten	INF
Trenner Q7	44	13	POSC - positionierbare Schalter	Y	SY	ABG 02 Trenner 110kV Kringel oben/unten	INF
Trenner Q7	33	13	POSC - positionierbare Schalter	Y	SY	ABG 02 Trenner 110kV Kringel oben/unten	INF
Trenner Q8	7	14	POSC - positionierbare Schalter	Y	SY	ABG 02 Trenner 110kV	INF
Trenner Q8	40	14	POSC - positionierbare Schalter	Y	SY	ABG 02 Trenner 110kV	INF
Trenner Q8	18	14	POSC - positionierbare Schalter	Y	SY	ABG 02 Trenner 110kV	INF
Trenner Q8	29	14	POSC - positionierbare Schalter	Y	SY	ABG 02 Trenner 110kV	INF
Trenner Q9	9	16	POSC - positionierbare Schalter	Y	SY	ABG 02 Trenner 110kV Kringel oben/unten	INF
Trenner Q9	20	16	POSC - positionierbare Schalter	Y	SY	ABG 02 Trenner 110kV Kringel oben/unten	INF

Proprietary data, company confidential. All rights reserved.
Confie a titre de secret d'entreprise. Tous droits reservés.
Comunicado como segredo empresarial. Reservados todos os direitos.
Confiado como secreto industrial. Nos reservamos todos los derechos.
The reproduction, transmission or use of this document or its is not permitted without express written authority.
Offenders will be liable for damages. All rights, including rights created by patent grant or registration of a utility model or design, are reserved.

Documentation structur: Standard
Source file: KO050722.ODA

Remarks	Date	Name	Date	22.07.2005	VSZ KOSICE	SIEMENS AG ISA TOOLS	Substation control system 6MB Indication field	T = /BS 23
			Drawn	LANG				+
			Appr.					-S116
			Norm		Orig./Repl. 1/Repl. by		Table	Page 23

Allocated diagram: Detailbild 3 Kosice
Type: Indication field for symbol/figure

Name	Section	Bay	Logical device	Lower limit
Quitt SF6	R110	EA23		KVITOVANIE
Quitt SF6	R110	EA19		KVITOVANIE
Quitt SF6	R110	EA05		KVITOVANIE
Quitt SF6	R110	EA21		KVITOVANIE
ROZV. BEZ SYNCHR.	R110	EA01		VYPNUTIE SYNCHRONIZACIE
S5 M	R110	EA17		S5 POLOHA VYPN./MIESTNE
S5 M	R110	EA21		S5 POLOHA VYPN./MIESTNE
S5 M	R110	EA19		S5 POLOHA VYPN./MIESTNE
S5 M	R110	EA05		S5 POLOHA VYPN./MIESTNE
S5 M	R110	EA23		S5 POLOHA VYPN./MIESTNE
Trenner Q1	R110	EA19	ODPOJOVAC Q1	SCHALTZUSTAND
Trenner Q1	R110	EA23	ODPOJOVAC Q1	SCHALTZUSTAND
Trenner Q1	R110	EA21	ODPOJOVAC Q1	SCHALTZUSTAND
Trenner Q1	R110	EA17	ODPOJOVAC Q1	SCHALTZUSTAND
Trenner Q1	R110	EA05	ODPOJOVAC Q1	SCHALTZUSTAND
Trenner Q2	R110	EA21	ODPOJOVAC Q2	SCHALTZUSTAND
Trenner Q2	R110	EA05	ODPOJOVAC Q2	SCHALTZUSTAND
Trenner Q2	R110	EA19	ODPOJOVAC Q2	SCHALTZUSTAND
Trenner Q2	R110	EA23	ODPOJOVAC Q2	SCHALTZUSTAND
Trenner Q2	R110	EA17	ODPOJOVAC Q2	SCHALTZUSTAND
Trenner Q20	R110	EA05	ODPOJOVAC Q20	SCHALTZUSTAND
Trenner Q7	R110	EA23	ODPOJOVAC Q7	SCHALTZUSTAND
Trenner Q7	R110	EA21	ODPOJOVAC Q7	SCHALTZUSTAND
Trenner Q7	R110	EA05	ODPOJOVAC Q7	SCHALTZUSTAND
Trenner Q7	R110	EA17	ODPOJOVAC Q7	SCHALTZUSTAND
Trenner Q7	R110	EA19	ODPOJOVAC Q7	SCHALTZUSTAND
Trenner Q8	R110	EA23	ODPOJOVAC ZEMNIACI Q8	SCHALTZUSTAND
Trenner Q8	R110	EA17	ODPOJOVAC ZEMNIACI Q8	SCHALTZUSTAND
Trenner Q8	R110	EA21	ODPOJOVAC ZEMNIACI Q8	SCHALTZUSTAND
Trenner Q8	R110	EA19	ODPOJOVAC ZEMNIACI Q8	SCHALTZUSTAND
Trenner Q9	R110	EA23	ODPOJOVAC Q9	SCHALTZUSTAND
Trenner Q9	R110	EA21	ODPOJOVAC Q9	SCHALTZUSTAND

Proprietary data, company confidential. All rights reserved.
Confie a titre de secret d'entreprise. Tous droits réservés.
Comunicado como segredo empresarial. Reservados todos os direitos.
Confiado como secreto industrial. Nos reservamos todos los derechos.
The reproduction, transmission or use of this document or its is not permitted without express written authority.
Offenders will be liable for damages. All rights, including rights created by patent grant or registration of a utility model or design, are reserved.

Documentation structur: Standard
Source file: KO050722.ODA

Rev.	Remarks	Date	Name	Date	22.07.2005	VSZ KOSICE	SIEMENS AG ISA TOOLS	Substation control system 6MB Indication field	T = /BS 24
				Drawn	LANG				+
				Appr.					
				Norm		Orig./Repl. 1/Repl. by		Table	-S116 Page 24

Allocated diagram: Detailbild 3 Kosice

Type: Indication field for symbol/figure

Name	Position Column	Position Line	Position recognition	Acknowledgeable	Display as	Display attribute group	Allocation of:
Trenner Q9	31	16	POSC - positionierbare Schalter	Y	SY	ABG 02 Trenner 110kV Kringel oben/unten	INF
Trenner Q9	42	16	POSC - positionierbare Schalter	Y	SY	ABG 02 Trenner 110kV Kringel oben/unten	INF

Proprietary data, company confidential. All rights reserved.
Confia a titre de secret d'entreprise. Tous droits reservs.
Comunicado como segredo empresarial. Reservados todos os direitos.
Confiado como secreto industrial. Nos reservamos todos los derechos.

The reproduction, transmission or use of this document or its contents is not permitted without express written authority. Offenders will be liable for damages. All rights, including rights created by patent grant or registration of a utility model or design, are reserved.

Documentation structur: Standard
Source file: KO050722.ODA

Remarks	Date	Name	Norm	Date 22.07.2005	Drawn LANG	Appr.	Orig./Repl. 1/Repl. by

VSZ KOSICE

SIEMENS AG
ISATOOLS

Substation control system 6MB
Indication field
Table

T = /BS 25
+
-S116
Page 5

Allocated diagram: Detailbild 3 Kosice

Type: Indication field for symbol/figure

Name	Section	Bay	Logical device	Lower limit	
Trenner Q9	R110	EA19	ODPOJOVAC Q9	SCHALTZUSTAND	
Trenner Q9	R110	EA17	ODPOJOVAC Q9	SCHALTZUSTAND	

Proprietary data, company confidential. All rights reserved.
Confiée à titre de secret d'entreprise. Tous droits réservés.
Comunicado como segredo empresarial. Reservados todos os direitos.
Confiado como secreto industrial. Nos reservamos todos los derechos.
The reproduction, transmission or use of this document or its contents is not permitted without express written authority. Offenders will be liable for damages. All rights, including rights created by patent grant or registration of a utility model or design, are reserved.

Documentation structure: Standard
Source file: KO050722.ODA

Date	22.07.2005	VSZ KOSICE	SIEMENS AG ISATOOLS	Substation control system 6MB Indication field	T = /BS 26
Drawn	LANG				+
Appr.					-S116 Page 26
Rev.	Remarks	Date	Name Norm	Orig./Repl. 1/Repl. by	Table

Proprietary data, company confidential. All rights reserved.
Confia a fins de secret d'entreprise. Tous droits r.serv.s.
Comunicado como segredo empresarial. Reservados todos os direitos.
Confiado como secreto industrial. Nos reservamos todos los derechos.

The reproduction, transmission or use of this document or its
is not permitted without expres written authority.
Offenders will be liable for damages. All rights, including rights
created by patent grant or registration of a utility model or design, are reserved

Documentation structur: Standard
Source file: KO050722.ODA

Allocated diagramDetailbild 3 Kosice

Name	Position Column	Position Line	Updating on change	Sign reversal	Digits after decimal point	Overall points	Left-justified	Leading zeros	Sign chained	+- suppression	Display attribute group	Section	Bay	Logical device	Lower limit
110KV MW Feld 01 SYN Frequenz 1	66	6	Y	N	2	6	N	N	N	N	ABG 12 SY-Meßwert	R110	EA01/3	SYNCHROMESSWERTE	Frequenz 1
110KV MW Feld 01 SYN Frequenz 2	66	7	Y	N	2	6	N	N	N	N	ABG 12 SY-Meßwert	R110	EA01/3	SYNCHROMESSWERTE	Frequenz 2
110KV MW Feld 01 SYN PHASENDIFFERENZ	65	9	Y	N	1	6	N	N	N	N	ABG 12 SY-Meßwert	R110	EA01/3	SYNCHROMESSWERTE	WINKELDIFFERENZ
110KV MW Feld 01 SYN SPGS-DIFFERENZ	65	8	Y	N	1	6	N	N	N	N	ABG 12 SY-Meßwert	R110	EA01/3	SYNCHROMESSWERTE	SPANNUNGSDIFFERENZ
Frequenz W1	69	16	Y	N	1	5	N	N	Y	Y	ABG 08 Meßwert	R110	EA01		FREKVENCIA W1
Frequenz W2	69	24	Y	N	1	5	N	N	Y	Y	ABG 08 Meßwert	R110	EA01		FREKVENCIA W2
MTP L2	50	4	Y	N	1	6	N	N	Y	Y	ABG 08 Meßwert	R110	EA05	MESSWERTE STROM	PRUD L2
MTP L2	28	4	Y	N	1	6	N	N	Y	Y	ABG 08 Meßwert	R110	EA19	MESSWERTE STROM	PRUD L2
MTP L2	6	4	Y	N	1	6	N	N	Y	Y	ABG 08 Meßwert	R110	EA23	MESSWERTE STROM	PRUD L2
MTP L2	39	4	Y	N	1	6	N	N	Y	Y	ABG 08 Meßwert	R110	EA17	MESSWERTE STROM	PRUD L2
MTP L2	17	4	Y	N	1	6	N	N	Y	Y	ABG 08 Meßwert	R110	EA21	MESSWERTE STROM	PRUD L2
Spannung L1	6	3	Y	N	1	6	N	N	Y	Y	ABG 08 Meßwert	R110	EA23	MESSWERTE SPANNUNG	NAPATIE L1
Spannung L1	39	3	Y	N	1	6	N	N	Y	Y	ABG 08 Meßwert	R110	EA17	MESSWERTE SPANNUNG	NAPATIE L1
Spannung L1	17	3	Y	N	1	6	N	N	Y	Y	ABG 08 Meßwert	R110	EA21	MESSWERTE SPANNUNG	NAPATIE L1
Spannung L1	50	3	Y	N	1	5	N	N	Y	Y	ABG 08 Meßwert	R110	EA05	MESSWERTE SPANNUNG	NAPATIE L1
Spannung L1	28	3	Y	N	1	6	N	N	Y	Y	ABG 08 Meßwert	R110	EA19	MESSWERTE SPANNUNG	NAPATIE L1
Spannung L1-L2	69	13	Y	N	1	5	N	N	Y	Y	ABG 08 Meßwert	R110	EA01	MESSW. SPANNUNG W1	NAPATIE L1-L2
Spannung L1-L2 W2	69	21	Y	N	1	5	N	N	Y	Y	ABG 08 Meßwert	R110	EA01	MESSW. SPANNUNG W2	NAPATIE L1-L2
Spannung L1-L3	69	14	Y	N	1	5	N	N	Y	Y	ABG 08 Meßwert	R110	EA01	MESSW. SPANNUNG W1	NAPATIE L1-L3
Spannung L1-L3 W2	69	22	Y	N	1	5	N	N	Y	Y	ABG 08 Meßwert	R110	EA01	MESSW. SPANNUNG W2	NAPATIE L1-L3
Spannung L2-L3	69	15	Y	N	1	5	N	N	Y	Y	ABG 08 Meßwert	R110	EA01	MESSW. SPANNUNG W1	NAPATIE L2-L3
Spannung L2-L3 W2	69	23	Y	N	1	5	N	N	Y	Y	ABG 08 Meßwert	R110	EA01	MESSW. SPANNUNG W2	NAPATIE L2-L3
WIRKLEISTUNG	6	7	Y	N	1	6	N	N	Y	Y	ABG 08 Meßwert	R110	EA23		VYKON CINNY
WIRKLEISTUNG	28	7	Y	N	1	6	N	N	Y	Y	ABG 08 Meßwert	R110	EA19		VYKON CINNY
WIRKLEISTUNG	17	7	Y	N	1	6	N	N	Y	Y	ABG 08 Meßwert	R110	EA21		VYKON CINNY
WIRKLEISTUNG	39	7	Y	N	1	6	N	N	Y	Y	ABG 08 Meßwert	R110	EA17		VYKON CINNY

Detailbild 4 Kosice

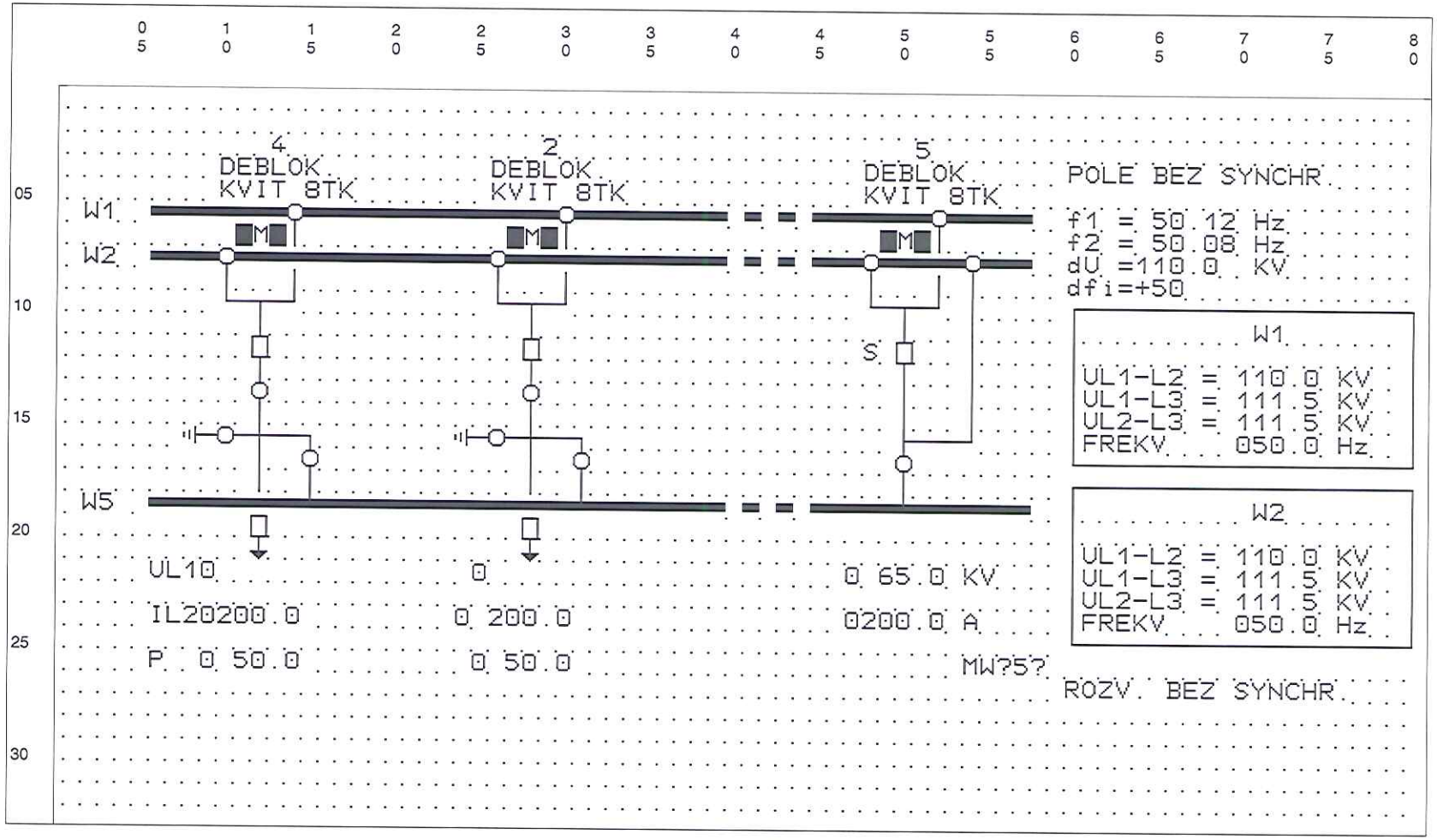

Proprietary data, company confidential. All rights reserved.
Confia a titre de secret d'entreprise. Tous droits réservés.
Comunicado como secreto empresarial. Reservados todos los derechos.
Confiado como segredo empresarial. Reservados todos os direitos.
Confiado como secreto industrial. Nos reservamos todos los derechos.

The reproduction, transmission or use of this document or its
is not permitted without express written authority.
Offenders will be liable for damages. All rights, including rights
created by patent grant or registration of a utility model or design, are reserved

Documentation structur: Standard
Source file: KO050722.ODA

Rev.	Remarks	Date	Name	Norm	Date 22.07.2005	VSZ KOSICE	SIEMENS AG ISAIOOLS	Substation control system 6MB Detailed diagram	T = /BS 28
					Drawn LANG				+
					Appr.				
					Orig./Repl. 1/Repl. by			Table	-S116 Page 28

Allocated diagram Detailbild 4 Kosice

Type: Indication field for symbol/figure

Name	Position Column	Position Line	Position recognition	Acknowledgeable	Display as	Display attribute group	Allocation of:
Deblok	48	4		N	SY	ABG 22 Kom/Geh/Schwarz/Cyan	INF
Deblok	10	4		N	SY	ABG 22 Kom/Geh/Schwarz/Cyan	INF
Deblok	26	4		N	SY	ABG 22 Kom/Geh/Schwarz/Cyan	INF
Deblokacia blokovania	49	7	BLOK - positionierbare SF6 Block.	Y	SY	ABG 21 8TK	INF
Deblokacia blokovania	27	7	BLOK - positionierbare SF6 Block.	Y	SY	ABG 21 8TK	INF
Deblokacia blokovania	11	7	BLOK - positionierbare SF6 Block.	Y	SY	ABG 21 8TK	INF
Feldsperre	26	7	POAU - postionierbare Feldsperre	N	FIG	ABG 14 Feldsperre gruen 110KV	INF
Feldsperre	10	7	POAU - postionierbare Feldsperre	N	FIG	ABG 14 Feldsperre gruen 110KV	INF
Feldsperre	48	7	POAU - postionierbare Feldsperre	N	FIG	ABG 14 Feldsperre gruen 110KV	INF
KVIT 8TK	10	5		Y	SY	ABG 23 Kom/Geh Quitt	INF
KVIT 8TK	48	5		Y	SY	ABG 23 Kom/Geh Quitt	INF
KVIT 8TK	26	5		Y	SY	ABG 23 Kom/Geh Quitt	INF
Leistungsschalter Gegenseite Feld 2	28	20		Y	SY	ABG 02 Ü-Bild Leistungsschalter 110kV	INF
Leistungsschalter Gegenseite Feld 4	12	20		Y	SY	ABG 02 Ü-Bild Leistungsschalter 110kV	INF
Leistungsschalter QM	50	12	POINTERN - positionierbare LS/Intern	Y	SY	ABG 02 Leistungsschalter 110kV	INF
Leistungsschalter QM	28	12	POSC - positionierbare Schalter	Y	SY	ABG 02 Leistungsschalter 110kV	INF
Leistungsschalter QM	12	12	POSC - positionierbare Schalter	Y	SY	ABG 02 Leistungsschalter 110kV	INF
POLE BEZ SYNCHR.	60	4		N	SY	ABG 22 Kom/Geh/Schwarz/Cyan	INF
Quitt SF6	13	7	KVIT - postionierbare SF6 Quittierung	Y	SY	ABG 21 8TK	INF
Quitt SF6	51	7	KVIT - postionierbare SF6 Quittierung	Y	SY	ABG 21 8TK	INF
Quitt SF6	29	7	KVIT - postionierbare SF6 Quittierung	Y	SY	ABG 21 8TK	INF
ROZV. BEZ SYNCHR.	60	27		N	SY	ABG 22 Kom/Geh/Schwarz/Cyan	INF
S5 M	28	7		N	SY	ABG 24 Kom/Geh/Weiß/Schwarz	INF
S5 M	50	7		N	SY	ABG 24 Kom/Geh/Weiß/Schwarz	INF
S5 M	12	7		N	SY	ABG 24 Kom/Geh/Weiß/Schwarz	INF
Trenner Q1	14	6	POSC - positionierbare Schalter	Y	SY	ABG 02 Trenner 110kV Kringel unten	INF
Trenner Q1	52	6	POSC - positionierbare Schalter	Y	SY	ABG 02 Trenner 110kV Kringel unten	INF
Trenner Q1	30	6	POSC - positionierbare Schalter	Y	SY	ABG 02 Trenner 110kV Kringel unten	INF
Trenner Q2	26	8	POSC - positionierbare Schalter	Y	SY	ABG 02 Trenner 110kV Kringel unten	INF
Trenner Q2	10	8	POSC - positionierbare Schalter	Y	SY	ABG 02 Trenner 110kV Kringel unten	INF
Trenner Q2	48	8	POSC - positionierbare Schalter	Y	SY	ABG 02 Trenner 110kV Kringel unten	INF
Trenner Q20	54	8	POSC - positionierbare Schalter	Y	SY	ABG 02 Trenner 110kV Kringel unten	INF

Proprietary data, company confidential. All rights reserved.
Confie a titre de secret d'entreprise. Tous droits reserv.s.
Comunicado como segredo empresarial. Reservados todos os direitos.
Confiado como secreto industrial. Nos reservamos todos los derechos.

The reproduction, transmission or use of this document or its is not permitted without express written authority. Offenders will be liable for damages. All rights, including rights created by patent grant or registration of a utility model or design, are reserved.

Documentation structur: Standard
Source file: KO050722.ODA

			Date	22.07.2005	VSZ KOSICE	SIEMENS AG ISA TOOLS	Substation control system 6MB Indication field
			Drawn	LANG			
			Appr.				Table
F	Remarks	Date	Name	Norm	Orig./Repl. 1/Repl. by		

T = /BS 29
+
-S116
Page 29

Allocated diagram: Detailbild 4 Kosice

Type: Indication field for symbol/figure

Name	Section	Bay	Logical device	Lower limit
Deblok	R110	EA05		PREVADZKA S1
Deblok	R110	EA04		PREVADZKA S1
Deblok	R110	EA02		PREVADZKA S1
Deblokacia blokovania	R110	EA05		DEBLOKACIA BLOKOVANIA
Deblokacia blokovania	R110	EA02		DEBLOKACIA BLOKOVANIA
Deblokacia blokovania	R110	EA04		DEBLOKACIA BLOKOVANIA
Feldsperre	R110	EA02		ZABLOKOVANI POLE
Feldsperre	R110	EA04		ZABLOKOVANI POLE
Feldsperre	R110	EA05		ZABLOKOVANI POLE
KVIT 8TK	R110	EA04		KVIT 8TK
KVIT 8TK	R110	EA05		KVIT 8TK
KVIT 8TK	R110	EA02		KVIT 8TK
Leistungsschalter Gegenseite Feld 2	T10/20-1	POLE02	PROTILAHLY VYPINAC	SCHALTZUSTAND
Leistungsschalter Gegenseite Feld 4	T30-6	POLE04	PROTILAHLY VYPINAC	SCHALTZUSTAND
Leistungsschalter QM	R110	EA05	VYPINAC Q0	SCHALTZUSTAND
Leistungsschalter QM	R110	EA02	VYPINAC Q0	SCHALTZUSTAND
Leistungsschalter QM	R110	EA04	VYPINAC Q0	SCHALTZUSTAND
POLE BEZ SYNCHR.	R110	SPOL		VYPNUTIE SYNCHRONIZACIE
Quitt SF6	R110	EA04		KVITOVANIE
Quitt SF6	R110	EA05		KVITOVANIE
Quitt SF6	R110	EA02		KVITOVANIE
ROZV. BEZ SYNCHR.	R110	EA01		VYPNUTIE SYNCHRONIZACIE
S5 M	R110	EA02		S5 POLOHA VYPN./MIESTNE
S5 M	R110	EA05		S5 POLOHA VYPN./MIESTNE
S5 M	R110	EA04		S5 POLOHA VYPN./MIESTNE
Trenner Q1	R110	EA04	ODPOJOVAC Q1	SCHALTZUSTAND
Trenner Q1	R110	EA05	ODPOJOVAC Q1	SCHALTZUSTAND
Trenner Q1	R110	EA02	ODPOJOVAC Q1	SCHALTZUSTAND
Trenner Q2	R110	EA02	ODPOJOVAC Q2	SCHALTZUSTAND
Trenner Q2	R110	EA04	ODPOJOVAC Q2	SCHALTZUSTAND
Trenner Q2	R110	EA05	ODPOJOVAC Q2	SCHALTZUSTAND
Trenner Q20	R110	EA05	ODPOJOVAC Q20	SCHALTZUSTAND

Proprietary data, company confidential. All rights reserved.
Confie a titre de secret d'entreprise. Tous droits reservs.
Comunicado como segredo empresarial. Reservados todos os direitos.
Confiado como secreto industrial. Nos reservamos todos los derechos.
The reproduction, transmission or use of this document or its contents is not permitted without express written authority. Offenders will be liable for damages. All rights, including rights created by patent grant or registration of a utility model or design, are reserved.

Documentation structur: Standard
Source file: KO050722.ODA

Rev.	Remarks	Date	Name	Norm

Date 22.07.2005
Drawn LANG
Appr.

VSZ KOSICE

Orig./Repl. 1/Repl. by

SIEMENS AG
ISATOOLS

Substation control system 6MB
Indication field

Table

T = /BS 30
+

-S116

Proprietary data, company confidential. All rights reserved.
Confia a tire de secret d'entreprise. Tous droits reservs.
Comunicado como segredo empressarial. Reservados todos os direitos.
Confiado como secreto industrial. Nos reservamos todos los derechos.

The reproduction, transmission or use of this document or its
is not permitted without expres written authority.
Offenders will be liable for damages. All rights, including rights
created by patent grant or registration of a utility model or design, are reserved.

Allocated diagram: Detailbild 4 Kosice

Type: Indication field for symbol/figure

Name	Position Column	Position Line	Position recognition	Acknowledgeable	Display as	Display attribute group	Allocation of:	
Trenner Q7	15	17	POSC - positionierbare Schalter	Y	SY	ABG 02 Trenner 110kV Kringel oben/unten	INF	
Trenner Q7	50	17	POSC - positionierbare Schalter	Y	SY	ABG 02 Trenner 110kV Kringel oben/unten	INF	
Trenner Q7	31	17	POSC - positionierbare Schalter	Y	SY	ABG 02 Trenner 110kV Kringel oben/unten	INF	
Trenner Q8	26	16	POSC - positionierbare Schalter	Y	SY	ABG 02 Trenner 110kV	INF	
Trenner Q8	10	16	POSC - positionierbare Schalter	Y	SY	ABG 02 Trenner 110kV	INF	
Trenner Q9	12	14	POSC - positionierbare Schalter	Y	SY	ABG 02 Trenner 110kV Kringel oben/unten	INF	
Trenner Q9	28	14	POSC - positionierbare Schalter	Y	SY	ABG 02 Trenner 110kV Kringel oben/unten	INF	

Allocated diagram Detailbild 4 Kosice

Type: Indication field for symbol/figure

Name	Section	Bay	Logical device	Lower limit
Trenner Q7	R110	EA04	ODPOJOVAC Q7	SCHALTZUSTAND
Trenner Q7	R110	EA05	ODPOJOVAC Q7	SCHALTZUSTAND
Trenner Q7	R110	EA02	ODPOJOVAC Q7	SCHALTZUSTAND
Trenner Q8	R110	EA02	ODPOJOVAC ZEMNIACI Q8	SCHALTZUSTAND
Trenner Q8	R110	EA04	ODPOJOVAC ZEMNIACI Q8	SCHALTZUSTAND
Trenner Q9	R110	EA04	ODPOJOVAC Q9	SCHALTZUSTAND
Trenner Q9	R110	EA02	ODPOJOVAC Q9	SCHALTZUSTAND

Proprietary data, company confidential. All rights reserved.
Confie a titre de secret d'entreprise. Tous droits reservés.
Comunicado como segredo empresarial. Reservados todos os direitos.
Confiado como secreto industrial. Nos reservamos todos los derechos.

The reproduction, transmission or use of this document or its is not permitted without express written authority.
Offenders will be liable for damages. All rights, including rights created by patent grant or registration of a utility model or design, are reserved.

Documentation structur: Standard
Source file: KO050722.ODA

Rev.	Remarks	Date	Name	Date	22.07.2005	VSZ KOSICE	SIEMENS AG ISA TOOLS	Substation control system 6MB Indication field	T = /BS 32
				Drawn	LANG				+
				Appr.					-S116 Page 32
				Norm		Orig./Repl. 1/Repl. by		Table	

Allocated diagram Detailbild 4 Kosice

Name	Position Column	Position Line	Updating on change	Sign reversal	Digits after decimal point	Overall points	Left-justified	Leading zeros	Sign chained	+- suppression	Display attribute group	Section	Bay	Logical device	Lower limit
110KV MW Feld 01 SYN Frequenz 1	65	6	Y	N	2	6	N	N	N	N	ABG 12 SY-Meßwert	R110	EA01/3	SYNCHROMESSWERTE	Frequenz 1
110KV MW Feld 01 SYN Frequenz 2	65	7	Y	N	2	6	N	N	N	N	ABG 12 SY-Meßwert	R110	EA01/3	SYNCHROMESSWERTE	Frequenz 2
110KV MW Feld 01 SYN PHASENDIFFERENZ	64	9	Y	N	1	6	N	N	N	N	ABG 12 SY-Meßwert	R110	EA01/3	SYNCHROMESSWERTE	WINKELDIFFERENZ
110KV MW Feld 01 SYN SPGS-DIFFERENZ	64	8	Y	N	1	6	N	N	N	N	ABG 12 SY-Meßwert	R110	EA01/3	SYNCHROMESSWERTE	SPANNUNGSDIFFERENZ
Frequenz W1	70	16	Y	N	1	5	N	N	Y	Y	ABG 08 Meßwert	R110	EA01		FREKVENCIA W1
Frequenz W2	70	24	Y	N	1	5	N	N	Y	Y	ABG 08 Meßwert	R110	EA01		FREKVENCIA W2
MTP L2	9	24	Y	N	1	6	N	N	Y	Y	ABG 08 Meßwert	R110	EA04	MESSWERTE STROM	PRUD L2
MTP L2	24	24	Y	N	1	7	N	N	Y	Y	ABG 08 Meßwert	R110	EA02	MESSWERTE STROM	PRUD L2
MTP L2	47	24	Y	N	1	6	N	N	Y	Y	ABG 08 Meßwert	R110	EA05	MESSWERTE STROM	PRUD L2
Spannung L1	9	22	Y	N	1	6	N	N	Y	Y	ABG 08 Meßwert	R110	EA04	MESSWERTE SPANNUNG	NAPATIE L1
Spannung L1	25	22	Y	N	1	6	N	N	Y	Y	ABG 08 Meßwert	R110	EA02	MESSWERTE SPANNUNG	NAPATIE L1
Spannung L1	47	22	Y	N	1	6	N	N	Y	Y	ABG 08 Meßwert	R110	EA05	MESSWERTE SPANNUNG	NAPATIE L1
Spannung L1-L2	70	13	Y	N	1	5	N	N	Y	Y	ABG 08 Meßwert	R110	EA01	MESSW. SPANNUNG W1	NAPATIE L1-L2
Spannung L1-L2 W2	70	21	Y	N	1	5	N	N	Y	Y	ABG 08 Meßwert	R110	EA01	MESSW. SPANNUNG W2	NAPATIE L1-L2
Spannung L1-L3	70	14	Y	N	1	5	N	N	Y	Y	ABG 08 Meßwert	R110	EA01	MESSW. SPANNUNG W1	NAPATIE L1-L3
Spannung L1-L3 W2	70	22	Y	N	1	5	N	N	Y	Y	ABG 08 Meßwert	R110	EA01	MESSW. SPANNUNG W2	NAPATIE L1-L3
Spannung L2-L3	70	15	Y	N	1	5	N	N	Y	Y	ABG 08 Meßwert	R110	EA01	MESSW. SPANNUNG W1	NAPATIE L2-L3
Spannung L2-L3 W2	70	23	Y	N	1	5	N	N	Y	Y	ABG 08 Meßwert	R110	EA01	MESSW. SPANNUNG W2	NAPATIE L2-L3
WIRKLEISTUNG	9	26	Y	N	1	6	N	N	Y	Y	ABG 08 Meßwert	R110	EA04		VYKON CINNY
WIRKLEISTUNG	25	26	Y	N	1	6	N	N	Y	Y	ABG 08 Meßwert	R110	EA02		VYKON CINNY

Proprietary data, company confidential. All rights reserved.
Confie a titre de secret d'entreprise. Tous droits réservés.
Comunicado como segredo empresarial. Reservados todos os direitos.
Confiado como secreto industrial. Nos reservamos todos los derechos.

The reproduction, transmission or use of this document or its is not permitted without expres written authority.
Offenders will be liable for damages. All rights, including rights created by patent grant or registration of a utility model or design, are reserved

Documentation structur: Standard
Source file: KO050722.ODA

			Date	22.07.2005	VSZ KOSICE	SIEMENS AG ISAIOOLS	Substation control system 6MB Analog value field	T	=	/BS 33
			Drawn	LANG					+	
			Appr.						-S116	Page 33
F	Remarks	Date	Name	Norm	Orig./Repl. 1/Repl. by		Table			

Detailbild 5 Kosice

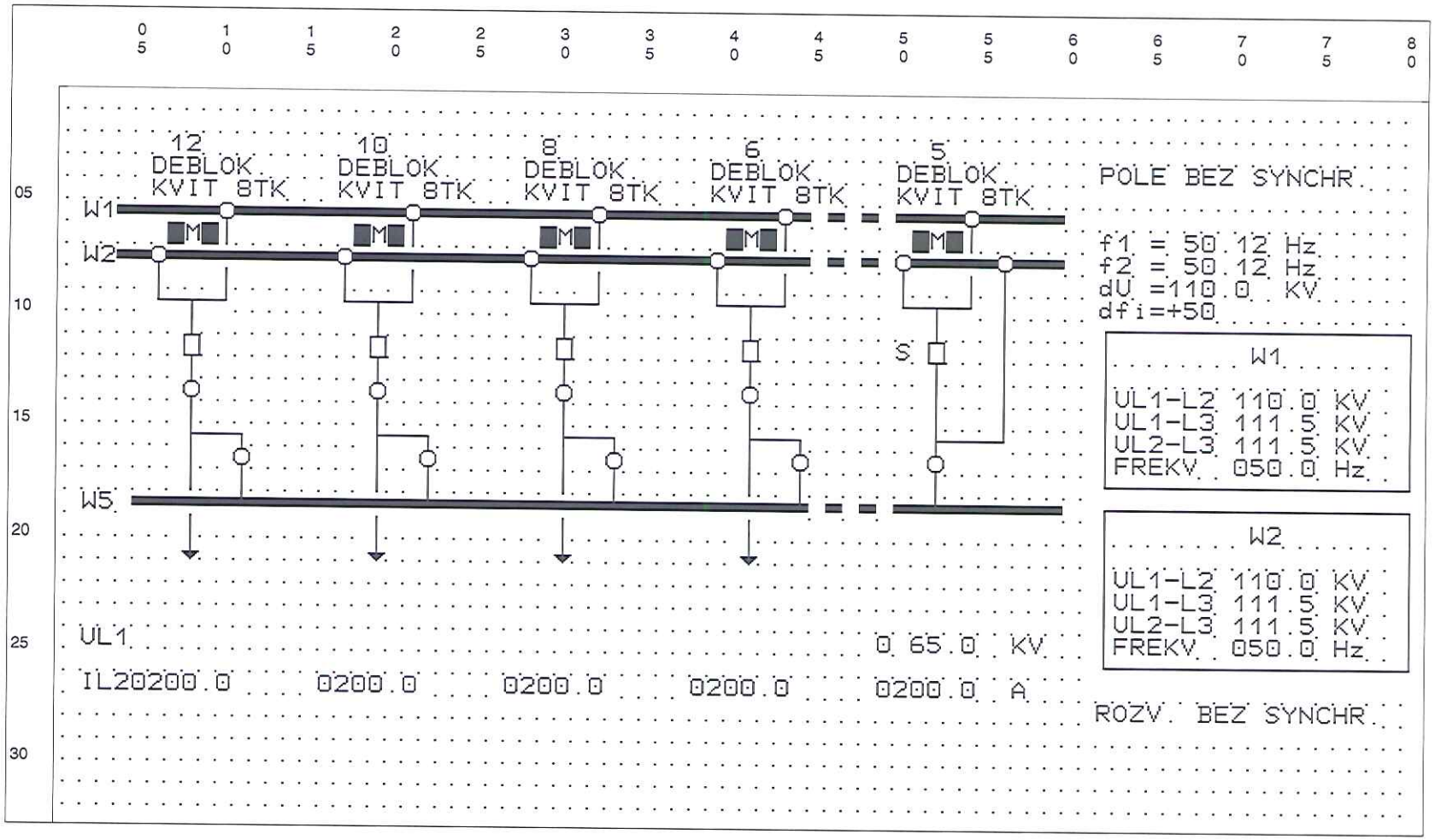

Proprietary data, company confidential. All rights reserved.
Confia a titre de secret d'entreprise. Tous droits réservés.
Comunicado como segredo empresarial. Reservados todos os direitos.
Confiado como secreto industrial. Nos reservamos todos los derechos.

The reproduction, transmission or use of this document or its contents is not permitted without express written authority. Offenders will be liable for damages. All rights, including rights created by patent grant or registration of a utility model or design, are reserved.

Documentation structur: Standard
Source file: KO050722.ODA

Rev.	Remarks	Date	Name	Norm	Date	22.07.2005
					Drawn	LANG
					Appr.	

Orig./Repl. 1/Repl. by

VSZ
KOSICE

SIEMENS AG
ISATOOLS

Substation control system 6MB
Detailed diagram

Table

T = /BS 34
+

-S116

Page 34

Allocated diagram Detailbild 5 Kosice

Type: Indication field for symbol/figure

Name	Position Column	Position Line	Position recognition	Acknowledgeable	Display as	Display attribute group	Allocation of:
Deblok	50	4		N	SY	ABG 22 Kom/Geh/Schwarz/Cyan	INF
Deblok	17	4		N	SY	ABG 22 Kom/Geh/Schwarz/Cyan	INF
Deblok	39	4		N	SY	ABG 22 Kom/Geh/Schwarz/Cyan	INF
Deblok	6	4		N	SY	ABG 22 Kom/Geh/Schwarz/Cyan	INF
Deblok	28	4		N	SY	ABG 22 Kom/Geh/Schwarz/Cyan	INF
Deblokacia blokovania	29	7	BLOK - positionierbare SF6 Block.	Y	SY	ABG 21 8TK	INF
Deblokacia blokovania	51	7	BLOK - positionierbare SF6 Block.	Y	SY	ABG 21 8TK	INF
Deblokacia blokovania	40	7	BLOK - positionierbare SF6 Block.	Y	SY	ABG 21 8TK	INF
Deblokacia blokovania	7	7	BLOK - positionierbare SF6 Block.	Y	SY	ABG 21 8TK	INF
Deblokacia blokovania	18	7	BLOK - positionierbare SF6 Block.	Y	SY	ABG 21 8TK	INF
Feldsperre	39	7	POAU - postionierbare Feldsperre	N	FIG	ABG 14 Feldsperre gruen 110KV	INF
Feldsperre	6	7	POAU - postionierbare Feldsperre	N	FIG	ABG 14 Feldsperre gruen 110KV	INF
Feldsperre	28	7	POAU - postionierbare Feldsperre	N	FIG	ABG 14 Feldsperre gruen 110KV	INF
Feldsperre	50	7	POAU - postionierbare Feldsperre	N	FIG	ABG 14 Feldsperre gruen 110KV	INF
Feldsperre	17	7	POAU - postionierbare Feldsperre	N	FIG	ABG 14 Feldsperre gruen 110KV	INF
KVIT 8TK	6	5		Y	SY	ABG 23 Kom/Geh Quitt	INF
KVIT 8TK	39	5		Y	SY	ABG 23 Kom/Geh Quitt	INF
KVIT 8TK	28	5		Y	SY	ABG 23 Kom/Geh Quitt	INF
KVIT 8TK	50	5		Y	SY	ABG 23 Kom/Geh Quitt	INF
KVIT 8TK	17	5		Y	SY	ABG 23 Kom/Geh Quitt	INF
Leistungsschalter QM	19	12	POSC - positionierbare Schalter	Y	SY	ABG 02 Leistungsschalter 110kV	INF
Leistungsschalter QM	52	12	POINTERN - positionierbare LS/Intern	Y	SY	ABG 02 Leistungsschalter 110kV	INF
Leistungsschalter QM	30	12	POSC - positionierbare Schalter	Y	SY	ABG 02 Leistungsschalter 110kV	INF
Leistungsschalter QM	41	12	POSC - positionierbare Schalter	Y	SY	ABG 02 Leistungsschalter 110kV	INF
Leistungsschalter QM	8	12	POSC - positionierbare Schalter	Y	SY	ABG 02 Leistungsschalter 110kV	INF
POLE BEZ SYNCHR.	62	4		N	SY	ABG 22 Kom/Geh/Schwarz/Cyan	INF
Quitt SF6	20	7	KVIT - postionierbare SF6 Quittierung	Y	SY	ABG 21 8TK	INF
Quitt SF6	53	7	KVIT - postionierbare SF6 Quittierung	Y	SY	ABG 21 8TK	INF
Quitt SF6	42	7	KVIT - postionierbare SF6 Quittierung	Y	SY	ABG 21 8TK	INF
Quitt SF6	31	7	KVIT - postionierbare SF6 Quittierung	Y	SY	ABG 21 8TK	INF
Quitt SF6	9	7	KVIT - postionierbare SF6 Quittierung	Y	SY	ABG 21 8TK	INF
ROZV. BEZ SYNCHR.	62	28		N	SY	ABG 22 Kom/Geh/Schwarz/Cyan	INF

Proprietary data, company confidential. All rights reserved
Confie a titre de secret d'entreprise. Tous droits reservs.
Comunicado como segredo empresarial. Reservados todos os direitos.
Confiado como secreto industrial. Nos reservamos todos los derechos.

The reproduction, transmission or use of this document or its is not permitted without expres written authority. Offenders will be liable for damages. All rights, including rights created by patent grant or registration of a utility model or design, are reserved

Documentation structur: Standard
Source file: KO050722.ODA

			Date	22.07.2005	VSZ KOSICE	SIEMENS AG ISAOOLS	Substation control system 6MB Indication field
			Drawn	LANG			
			Appr.				Table
F	Remarks	Date	Name	Norm	Orig./Repl. 1/Repl. by		

T = /BS 35
+
-S116
Page 5

Allocated diagram Detailbild 5 Kosice

Type: Indication field for symbol/figure

Name	Section	Bay	Logical device	Lower limit
Deblok	R110	EA05		PREVADZKA S1
Deblok	R110	EA10		PREVADZKA S1
Deblok	R110	EA06		PREVADZKA S1
Deblok	R110	EA12		PREVADZKA S1
Deblok	R110	EA08		PREVADZKA S1
Deblokacia blokovania	R110	EA08		DEBLOKACIA BLOKOVANIA
Deblokacia blokovania	R110	EA05		DEBLOKACIA BLOKOVANIA
Deblokacia blokovania	R110	EA06		DEBLOKACIA BLOKOVANIA
Deblokacia blokovania	R110	EA12		DEBLOKACIA BLOKOVANIA
Deblokacia blokovania	R110	EA10		DEBLOKACIA BLOKOVANIA
Feldsperre	R110	EA06		ZABLOKOVANI POLE
Feldsperre	R110	EA12		ZABLOKOVANI POLE
Feldsperre	R110	EA08		ZABLOKOVANI POLE
Feldsperre	R110	EA05		ZABLOKOVANI POLE
Feldsperre	R110	EA10		ZABLOKOVANI POLE
KVIT 8TK	R110	EA12		KVIT 8TK
KVIT 8TK	R110	EA06		KVIT 8TK
KVIT 8TK	R110	EA08		KVIT 8TK
KVIT 8TK	R110	EA05		KVIT 8TK
KVIT 8TK	R110	EA10		KVIT 8TK
Leistungsschalter QM	R110	EA10	VYPINAC Q0	SCHALTZUSTAND
Leistungsschalter QM	R110	EA05	VYPINAC Q0	SCHALTZUSTAND
Leistungsschalter QM	R110	EA08	VYPINAC Q0	SCHALTZUSTAND
Leistungsschalter QM	R110	EA06	VYPINAC Q0	SCHALTZUSTAND
Leistungsschalter QM	R110	EA12	VYPINAC Q0	SCHALTZUSTAND
POLE BEZ SYNCHR.	R110	SPOL		VYPNUTIE SYNCHRONIZACIE
Quitt SF6	R110	EA10		KVITOVANIE
Quitt SF6	R110	EA05		KVITOVANIE
Quitt SF6	R110	EA06		KVITOVANIE
Quitt SF6	R110	EA08		KVITOVANIE
Quitt SF6	R110	EA12		KVITOVANIE
ROZV. BEZ SYNCHR.	R110	EA01		VYPNUTIE SYNCHRONIZACIE

Proprietary data, company confidential. All rights reserved. Confie a titre de secret d'entreprise. Tous droits reservés. Comunicado como segredo empresarial. Reservados todos os direitos. Confiado como secreto industrial. Nos reservamos todos los derechos.

The reproduction, transmission or use of this document or its is not permitted without express written authority. Offenders will be liable for damages. All rights, including rights created by patent grant or registration of a utility model or design, are reserved.

Documentation structur: Standard

Source file: KO050722.ODA

Rev.	Remarks	Date	Name	Date	22.07.2005	VSZ KOSICE	SIEMENS AG ISAOOLS	Substation control system 6MB Indication field	T = /BS 36
				Drawn	LANG				+
				Appr.					-S116 Page 36
				Norm		Orig./Repl. 1/Repl. by		Table	

Allocated diagram Detailbild 5 Kosice

Type: Indication field for symbol/figure

Name	Position Column	Position Line	Position recognition	Acknowledgeable	Display as	Display attribute group	Allocation of:
S5 M	41	7		N	SY	ABG 24 Kom/Geh/Weiß/Schwarz	INF
S5 M	8	7		N	SY	ABG 24 Kom/Geh/Weiß/Schwarz	INF
S5 M	30	7		N	SY	ABG 24 Kom/Geh/Weiß/Schwarz	INF
S5 M	52	7		N	SY	ABG 24 Kom/Geh/Weiß/Schwarz	INF
S5 M	19	7		N	SY	ABG 24 Kom/Geh/Weiß/Schwarz	INF
Trenner Q1	32	6	POSC - positionierbare Schalter	Y	SY	ABG 02 Trenner 110kV Kringel unten	INF
Trenner Q1	10	6	POSC - positionierbare Schalter	Y	SY	ABG 02 Trenner 110kV Kringel unten	INF
Trenner Q1	54	6	POSC - positionierbare Schalter	Y	SY	ABG 02 Trenner 110kV Kringel unten	INF
Trenner Q1	43	6	POSC - positionierbare Schalter	Y	SY	ABG 02 Trenner 110kV Kringel unten	INF
Trenner Q1	21	6	POSC - positionierbare Schalter	Y	SY	ABG 02 Trenner 110kV Kringel unten	INF
Trenner Q2	6	8	POSC - positionierbare Schalter	Y	SY	ABG 02 Trenner 110kV Kringel unten	INF
Trenner Q2	39	8	POSC - positionierbare Schalter	Y	SY	ABG 02 Trenner 110kV Kringel unten	INF
Trenner Q2	17	8	POSC - positionierbare Schalter	Y	SY	ABG 02 Trenner 110kV Kringel unten	INF
Trenner Q2	50	8	POSC - positionierbare Schalter	Y	SY	ABG 02 Trenner 110kV Kringel unten	INF
Trenner Q2	28	8	POSC - positionierbare Schalter	Y	SY	ABG 02 Trenner 110kV Kringel unten	INF
Trenner Q20	56	8	POSC - positionierbare Schalter	Y	SY	ABG 02 Trenner 110kV Kringel unten	INF
Trenner Q7	22	17	POSC - positionierbare Schalter	Y	SY	ABG 02 Trenner 110kV Kringel oben/unten	INF
Trenner Q7	11	17	POSC - positionierbare Schalter	Y	SY	ABG 02 Trenner 110kV Kringel oben/unten	INF
Trenner Q7	52	17	POSC - positionierbare Schalter	Y	SY	ABG 02 Trenner 110kV Kringel oben/unten	INF
Trenner Q7	33	17	POSC - positionierbare Schalter	Y	SY	ABG 02 Trenner 110kV Kringel oben/unten	INF
Trenner Q7	44	17	POSC - positionierbare Schalter	Y	SY	ABG 02 Trenner 110kV Kringel oben/unten	INF
Trenner Q9	30	14	POSC - positionierbare Schalter	Y	SY	ABG 02 Trenner 110kV Kringel oben/unten	INF
Trenner Q9	8	14	POSC - positionierbare Schalter	Y	SY	ABG 02 Trenner 110kV Kringel oben/unten	INF
Trenner Q9	19	14	POSC - positionierbare Schalter	Y	SY	ABG 02 Trenner 110kV Kringel oben/unten	INF
Trenner Q9	41	14	POSC - positionierbare Schalter	Y	SY	ABG 02 Trenner 110kV Kringel oben/unten	INF

Proprietary data, company confidential. All rights reserved.
Confie a titre de secret d'entreprise. Tous droits réservés.
Comunicado como segredo empresarial. Reservados todos os direitos.
Confiado como secreto industrial. Nos reservamos todos los derechos.
The reproduction, transmission or use of this document or its is not permitted without express written authority. Offenders will be liable for damages. All rights, including rights created by patent grant or registration of a utility model or design, are reserved.

Documentation structur: Standard
Source file: KO050722.ODA

			Date	22.07.2005	VSZ KOSICE	SIEMENS AG ISAOOLS	Substation control system 6MB Indication field
			Drawn	LANG			
			Appr.				
R	Remarks	Date	Name	Norm	Orig./Repl. 1/Repl. by		Table

T = /BS 37
+
-S116
Page 7

Allocated diagram Detailbild 5 Kosice

Type: Indication field for symbol/figure

Name	Section	Bay	Logical device	Lower limit
S5 M	R110	EA06		S5 POLOHA VYPN./MIESTNE
S5 M	R110	EA12		S5 POLOHA VYPN./MIESTNE
S5 M	R110	EA08		S5 POLOHA VYPN./MIESTNE
S5 M	R110	EA05		S5 POLOHA VYPN./MIESTNE
S5 M	R110	EA10		S5 POLOHA VYPN./MIESTNE
Trenner Q1	R110	EA08	ODPOJOVAC Q1	SCHALTZUSTAND
Trenner Q1	R110	EA12	ODPOJOVAC Q1	SCHALTZUSTAND
Trenner Q1	R110	EA05	ODPOJOVAC Q1	SCHALTZUSTAND
Trenner Q1	R110	EA06	ODPOJOVAC Q1	SCHALTZUSTAND
Trenner Q1	R110	EA10	ODPOJOVAC Q1	SCHALTZUSTAND
Trenner Q2	R110	EA12	ODPOJOVAC Q2	SCHALTZUSTAND
Trenner Q2	R110	EA06	ODPOJOVAC Q2	SCHALTZUSTAND
Trenner Q2	R110	EA10	ODPOJOVAC Q2	SCHALTZUSTAND
Trenner Q2	R110	EA05	ODPOJOVAC Q2	SCHALTZUSTAND
Trenner Q2	R110	EA08	ODPOJOVAC Q2	SCHALTZUSTAND
Trenner Q20	R110	EA05	ODPOJOVAC Q20	SCHALTZUSTAND
Trenner Q7	R110	EA10	ODPOJOVAC Q7	SCHALTZUSTAND
Trenner Q7	R110	EA12	ODPOJOVAC Q7	SCHALTZUSTAND
Trenner Q7	R110	EA05	ODPOJOVAC Q7	SCHALTZUSTAND
Trenner Q7	R110	EA08	ODPOJOVAC Q7	SCHALTZUSTAND
Trenner Q7	R110	EA06	ODPOJOVAC Q7	SCHALTZUSTAND
Trenner Q9	R110	EA08	ODPOJOVAC Q9	SCHALTZUSTAND
Trenner Q9	R110	EA12	ODPOJOVAC Q9	SCHALTZUSTAND
Trenner Q9	R110	EA10	ODPOJOVAC Q9	SCHALTZUSTAND
Trenner Q9	R110	EA06	ODPOJOVAC Q9	SCHALTZUSTAND

Proprietary data, company confidential. All rights reserved.
Confie a titre de secret d'entreprise. Tous droits reservés.
Comunicado como segredo empresarial. Reservados todos os direitos.
Confiado como secreto industrial. Nos reservamos todos los derechos.
The reproduction, transmission or use of this document or its is not permitted without expres written authority.
Offenders will be liable for damages. All rights, including rights created by patent grant or registration of a utility model or design, are reserved

Documentation structur: Standard
Source file: KO050722.ODA

Rev.	Remarks	Date	Name	Date	22.07.2005	VSZ KOSICE	SIEMENS AG ISA TOOLS	Substation control system 6MB Indication field	T = /BS 38
				Drawn	LANG				+
				Appr.					
				Norm		Orig./Repl. 1/Repl. by		Table	-S116 Page 38

Allocated diagram Detailbild 5 Kosice

Name	Position Column	Position Line	Updating on change	Sign reversal	Digits after decimal point	Overall points	Left-justified	Leading zeros	Sign chained	+- suppression	Display attribute group	Section	Bay	Logical device	Lower limit
110KV MW Feld 01 SYN Frequenz 1	67	7	Y	N	2	6	N	N	N	N	ABG 12 SY-Meßwert	R110	EA01/3	SYNCHROMESSWERTE	Frequenz 1
110KV MW Feld 01 SYN Frequenz 2	67	8	Y	N	2	6	N	N	N	N	ABG 12 SY-Meßwert	R110	EA01/3	SYNCHROMESSWERTE	Frequenz 2
110KV MW Feld 01 SYN PHASENDIFFERENZ	66	10	Y	N	1	6	N	N	N	N	ABG 12 SY-Meßwert	R110	EA01/3	SYNCHROMESSWERTE	WINKELDIFFERENZ
110KV MW Feld 01 SYN SPGS-DIFFERENZ	66	9	Y	N	1	6	N	N	N	N	ABG 12 SY-Meßwert	R110	EA01/3	SYNCHROMESSWERTE	SPANNUNGSDIFFERENZ
Frequenz W1	70	17	Y	N	1	5	N	N	Y	Y	ABG 08 Meßwert	R110	EA01		FREKVENCIA W1
Frequenz W2	70	25	Y	N	1	5	N	N	Y	Y	ABG 08 Meßwert	R110	EA01		FREKVENCIA W2
MTP L2	27	27	Y	N	1	6	N	N	Y	Y	ABG 08 Meßwert	R110	EA08	MESSWERTE STROM	PRUD L2
MTP L2	16	27	Y	N	1	6	N	N	Y	Y	ABG 08 Meßwert	R110	EA10	MESSWERTE STROM	PRUD L2
MTP L2	5	27	Y	N	1	6	N	N	Y	Y	ABG 08 Meßwert	R110	EA12	MESSWERTE STROM	PRUD L2
MTP L2	49	27	Y	N	1	6	N	N	Y	Y	ABG 08 Meßwert	R110	EA05	MESSWERTE STROM	PRUD L2
MTP L2	38	27	Y	N	1	6	N	N	Y	Y	ABG 08 Meßwert	R110	EA06	MESSWERTE STROM	PRUD L2
Spannung L1	49	25	Y	N	1	6	N	N	Y	Y	ABG 08 Meßwert	R110	EA05	MESSWERTE SPANNUNG	NAPATIE L1
Spannung L1-L2	70	14	Y	N	1	5	N	N	Y	Y	ABG 08 Meßwert	R110	EA01	MESSW. SPANNUNG W1	NAPATIE L1-L2
Spannung L1-L2 W2	70	22	Y	N	1	5	N	N	Y	Y	ABG 08 Meßwert	R110	EA01	MESSW. SPANNUNG W2	NAPATIE L1-L2
Spannung L1-L3	70	15	Y	N	1	5	N	N	Y	Y	ABG 08 Meßwert	R110	EA01	MESSW. SPANNUNG W1	NAPATIE L1-L3
Spannung L1-L3 W2	70	23	Y	N	1	5	N	N	Y	Y	ABG 08 Meßwert	R110	EA01	MESSW. SPANNUNG W2	NAPATIE L1-L3
Spannung L2-L3	70	16	Y	N	1	5	N	N	Y	Y	ABG 08 Meßwert	R110	EA01	MESSW. SPANNUNG W1	NAPATIE L2-L3
Spannung L2-L3 W2	70	24	Y	N	1	5	N	N	Y	Y	ABG 08 Meßwert	R110	EA01	MESSW. SPANNUNG W2	NAPATIE L2-L3

Proprietary data, company confidential. All rights reserved.
Confie a titre de secret d'entreprise. Tous droits r,serv,s.
Comunicado como segredo empresarial. Reservados todos os direitos.
Confiado como secreto industrial. Nos reservamos todos los derechos.

The reproduction, transmission or use of this document or its is not permitted without expres written authority.
Offenders will be liable for damages. All rights, including rights created by patent grant or registration of a utility model or design, are reserved

Documentation structur: Standard
Source file: KO050722.ODA

			Date	22.07.2005	VSZ KOSICE	SIEMENS AG ISAOOLS	Substation control system 6MB Analog value field	T	=	/BS 39
			Drawn	LANG					+	
			Appr.						-S116	Page 39
F	Remarks	Date	Name	Norm	Orig./Repl. 1/Repl. by		Table			

Detailbild 6 Kosice

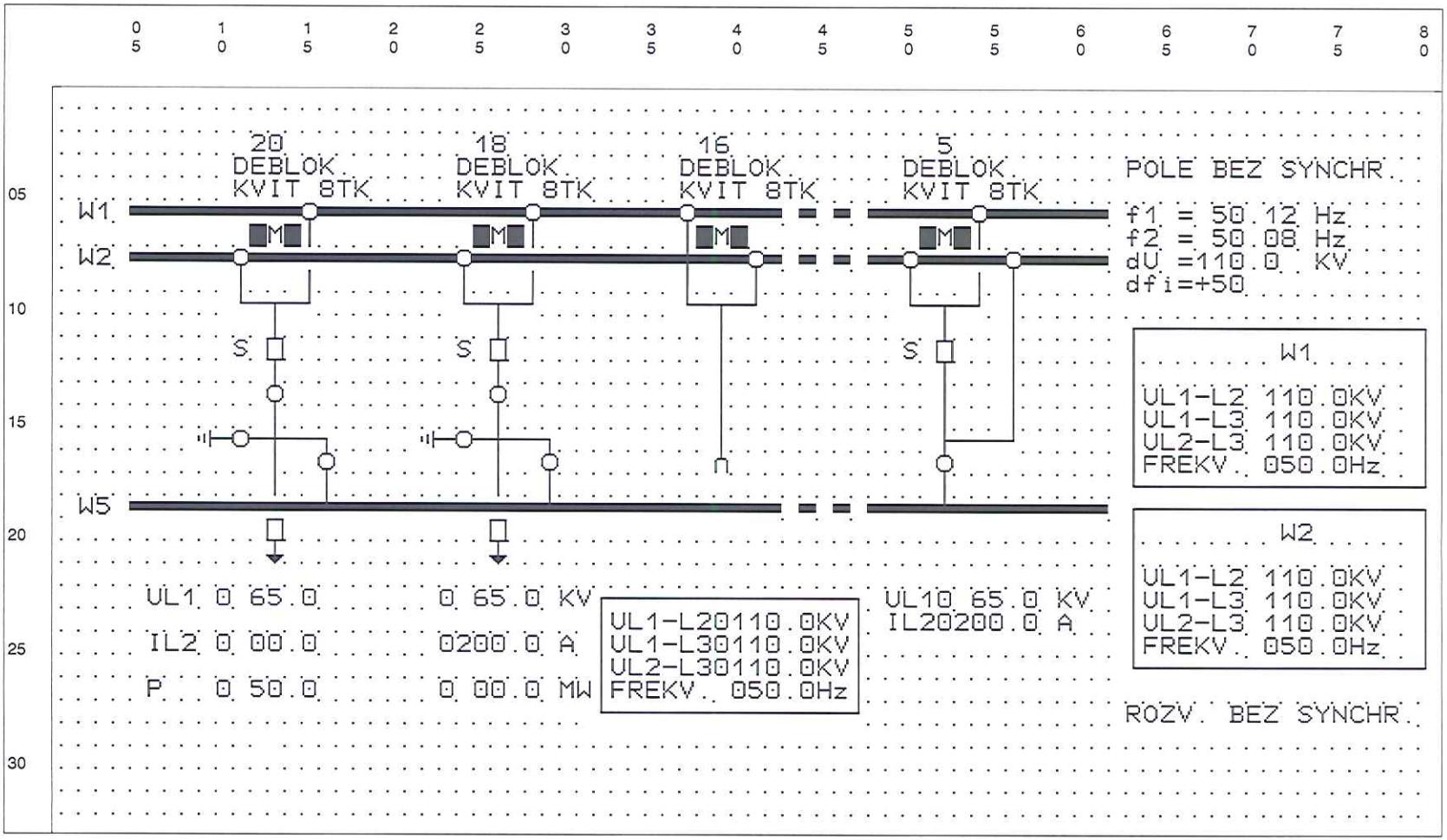

Proprietary data, company confidential. All rights reserved.
Confie a titre de secret d'entreprise. Tous droits reservés.
Comunicado como segredo empresarial. Reservados todos os direitos.
Confiado como secreto industrial. Nos reservamos todos los derechos.

The reproduction, transmission or use of this document or its is not permitted without expres written authority.
Offenders will be liable for damages. All rights, including rights created by patent grant or registration of a utility model or design, are reserved.

Documentation structur: Standard
Source file: KO050722.ODA

Rev.	Remarks	Date	Name	Date	22.07.2005	VSZ KOSICE	SIEMENS AG ISAOOLS	Substation control system 6MB Detailed diagram	T = /BS 40
				Drawn	LANG				+
				Appr.					
				Norm		Orig./Repl. 1/Repl. by		Table	-S116 Page 40

Allocated diagram: Detailbild 6 Kosice

Type: Indication field for symbol/figure

Name	Position Column	Position Line	Position recognition	Acknowledgeable	Display as	Display attribute group	Allocation of:
Deblok	11	4		N	SY	ABG 22 Kom/Geh/Schwarz/Cyan	INF
Deblok	50	4		N	SY	ABG 22 Kom/Geh/Schwarz/Cyan	INF
Deblok	24	4		N	SY	ABG 22 Kom/Geh/Schwarz/Cyan	INF
Deblok	37	4		N	SY	ABG 22 Kom/Geh/Schwarz/Cyan	INF
Deblokacia blokovania	12	7	BLOK - positionierbare SF6 Block.	Y	SY	ABG 21 8TK	INF
Deblokacia blokovania	38	7	BLOK - positionierbare SF6 Block.	Y	SY	ABG 21 8TK	INF
Deblokacia blokovania	25	7	BLOK - positionierbare SF6 Block.	Y	SY	ABG 21 8TK	INF
Deblokacia blokovania	51	7	BLOK - positionierbare SF6 Block.	Y	SY	ABG 21 8TK	INF
Feldsperre	50	7	POAU - postionierbare Feldsperre	N	FIG	ABG 14 Feldsperre gruen 110KV	INF
Feldsperre	11	7	POAU - postionierbare Feldsperre	N	FIG	ABG 14 Feldsperre gruen 110KV	INF
Feldsperre	24	7	POAU - postionierbare Feldsperre	N	FIG	ABG 14 Feldsperre gruen 110KV	INF
Feldsperre	37	7	POAU - postionierbare Feldsperre	N	FIG	ABG 14 Feldsperre gruen 110KV	INF
KVIT 8TK	11	5		Y	SY	ABG 23 Kom/Geh Quitt	INF
KVIT 8TK	50	5		Y	SY	ABG 23 Kom/Geh Quitt	INF
KVIT 8TK	24	5		Y	SY	ABG 23 Kom/Geh Quitt	INF
KVIT 8TK	37	5		Y	SY	ABG 23 Kom/Geh Quitt	INF
Leistungsschalter Gegenseite Feld 18	26	20		Y	SY	ABG 02 Leistungsschalter 110kV	INF
Leistungsschalter Gegenseite Feld 20	13	20		Y	SY	ABG 02 Leistungsschalter 110kV	INF
Leistungsschalter QM	13	12	POINTERN - positionierbare LS/Intern	Y	SY	ABG 02 Leistungsschalter 110kV	INF
Leistungsschalter QM	26	12	POINTERN - positionierbare LS/Intern	Y	SY	ABG 02 Leistungsschalter 110kV	INF
Leistungsschalter QM	52	12	POINTERN - positionierbare LS/Intern	Y	SY	ABG 02 Leistungsschalter 110kV	INF
POLE BEZ SYNCHR.	63	4		N	SY	ABG 22 Kom/Geh/Schwarz/Cyan	INF
Quitt SF6	53	7	KVIT - postionierbare SF6 Quittierung	Y	SY	ABG 21 8TK	INF
Quitt SF6	27	7	KVIT - postionierbare SF6 Quittierung	Y	SY	ABG 21 8TK	INF
Quitt SF6	40	7	KVIT - postionierbare SF6 Quittierung	Y	SY	ABG 21 8TK	INF
Quitt SF6	14	7	KVIT - postionierbare SF6 Quittierung	Y	SY	ABG 21 8TK	INF
ROZV. BEZ SYNCHR.	63	28		N	SY	ABG 22 Kom/Geh/Schwarz/Cyan	INF
S5 M	13	7		N	SY	ABG 24 Kom/Geh/Weiß/Schwarz	INF
S5 M	39	7		N	SY	ABG 24 Kom/Geh/Weiß/Schwarz	INF
S5 M	52	7		N	SY	ABG 24 Kom/Geh/Weiß/Schwarz	INF
S5 M	26	7		N	SY	ABG 24 Kom/Geh/Weiß/Schwarz	INF
Trenner Q1	15	6	POSC - positionierbare Schalter	Y	SY	ABG 02 Trenner 110kV Kringel unten	INF

Proprietary data company confidential All rights reserved
Confidential Freiden secret Geheimgut Tous droits réservés
Comunicado como segredo empresarial Reservados todos os direitos
Confidado como secreto industrial Nos reservamos todos los derechos.
The reproduction, transmission or use of this document or its contents is not permitted without express written authority. Offenders will be liable for damages. All rights, including rights created by patent grant or registration of a utility model or design, are reserved

Documentation structur: Standard
Source file: KO050722.ODA

Date	22.07.2005	VSZ KOSICE	SIEMENS AG ISAOOLS	Substation control system 6MB Indication field	T = /BS 41
Drawn	LANG				+
Appr.					-S116 Page 41
Remarks	Date / Name Norm	Orig./Repl. 1/Repl. by		Table	

Allocated diagram: Detailbild 6 Kosice

Type: Indication field for symbol/figure

Name	Section	Bay	Logical device	Lower limit
Deblok	R110	EA20		PREVADZKA S1
Deblok	R110	EA05		PREVADZKA S1
Deblok	R110	EA18		PREVADZKA S1
Deblok	R110	EA16		PREVADZKA S1
Deblokacia blokovania	R110	EA20		DEBLOKACIA BLOKOVANIA
Deblokacia blokovania	R110	EA16		DEBLOKACIA BLOKOVANIA
Deblokacia blokovania	R110	EA18		DEBLOKACIA BLOKOVANIA
Deblokacia blokovania	R110	EA05		DEBLOKACIA BLOKOVANIA
Feldsperre	R110	EA05		ZABLOKOVANI POLE
Feldsperre	R110	EA20		ZABLOKOVANI POLE
Feldsperre	R110	EA18		ZABLOKOVANI POLE
Feldsperre	R110	EA16		ZABLOKOVANI POLE
KVIT 8TK	R110	EA20		KVIT 8TK
KVIT 8TK	R110	EA05		KVIT 8TK
KVIT 8TK	R110	EA18		KVIT 8TK
KVIT 8TK	R110	EA16		KVIT 8TK
Leistungsschalter Gegenseite Feld 18	T02-3	POLE18	PROTILAHLY VYPINAC	SCHALTZUSTAND
Leistungsschalter Gegenseite Feld 20	T05-11	POLE20	PROTILAHLY VYPINAC	SCHALTZUSTAND
Leistungsschalter QM	R110	EA20	VYPINAC Q0	SCHALTZUSTAND
Leistungsschalter QM	R110	EA18	VYPINAC Q0	SCHALTZUSTAND
Leistungsschalter QM	R110	EA05	VYPINAC Q0	SCHALTZUSTAND
POLE BEZ SYNCHR.	R110	SPOL		VYPNUTIE SYNCHRONIZACIE
Quitt SF6	R110	EA05		KVITOVANIE
Quitt SF6	R110	EA18		KVITOVANIE
Quitt SF6	R110	EA16		KVITOVANIE
Quitt SF6	R110	EA20		KVITOVANIE
ROZV. BEZ SYNCHR.	R110	EA01		VYPNUTIE SYNCHRONIZACIE
S5 M	R110	EA20		S5 POLOHA VYPN./MIESTNE
S5 M	R110	EA16		S5 POLOHA VYPN./MIESTNE
S5 M	R110	EA05		S5 POLOHA VYPN./MIESTNE
S5 M	R110	EA18		S5 POLOHA VYPN./MIESTNE
Trenner Q1	R110	EA20	ODPOJOVAC Q1	SCHALTZUSTAND

Proprietary data, company confidential. All rights reserved.
Confie a titre de secret d'entreprise. Tous droits r,serv,s.
Comunicado como segredo empresarial. Reservados todos os direitos.
Confiado como secreto industrial. Nos reservamos todos los derechos.
The reproduction, transmission or use of theis document or its is not permitted without expres written authority.
Offenders will be liable for damages. All rights, including rights created by patent grant or registration of a utility model or design, are reserved.

Documentation structur: Standard
Source file: KO050722.ODA

Rev.	Remarks	Date	Name	Date	22.07.2005	VSZ KOSICE	SIEMENS AG ISAOOLS	Substation control system 6MB Indication field	T = /BS 42
				Drawn	LANG				+
				Appr.					-S116
				Norm		Orig./Repl. 1/Repl. by		Table	Page 42

Allocated diagram: Detailbild 6 Kosice

Type: Indication field for symbol/figure

Name	Position Column	Position Line	Position recognition	Acknowledgeable	Display as	Display attribute group	Allocation of:
Trenner Q1	54	6	POSC - positionierbare Schalter	Y	SY	ABG 02 Trenner 110kV Kringel unten	INF
Trenner Q1	28	6	POSC - positionierbare Schalter	Y	SY	ABG 02 Trenner 110kV Kringel unten	INF
Trenner Q1	37	6	POSC - positionierbare Schalter	Y	SY	ABG 02 Trenner 110kV	INF
Trenner Q2	41	8	POSC - positionierbare Schalter	Y	SY	ABG 02 Trenner 110kV Kringel unten	INF
Trenner Q2	24	8	POSC - positionierbare Schalter	Y	SY	ABG 02 Trenner 110kV Kringel unten	INF
Trenner Q2	50	8	POSC - positionierbare Schalter	Y	SY	ABG 02 Trenner 110kV Kringel unten	INF
Trenner Q2	11	8	POSC - positionierbare Schalter	Y	SY	ABG 02 Trenner 110kV Kringel unten	INF
Trenner Q20	56	8	POSC - positionierbare Schalter	Y	SY	ABG 02 Trenner 110kV Kringel unten	INF
Trenner Q7	29	17	POSC - positionierbare Schalter	Y	SY	ABG 02 Trenner 110kV Kringel oben/unten	INF
Trenner Q7	16	17	POSC - positionierbare Schalter	Y	SY	ABG 02 Trenner 110kV Kringel oben/unten	INF
Trenner Q7	52	17	POSC - positionierbare Schalter	Y	SY	ABG 02 Trenner 110kV Kringel oben/unten	INF
Trenner Q8	24	16	POSC - positionierbare Schalter	Y	SY	ABG 02 Trenner 110kV	INF
Trenner Q8	11	16	POSC - positionierbare Schalter	Y	SY	ABG 02 Trenner 110kV	INF
Trenner Q9	13	14	POSC - positionierbare Schalter	Y	SY	ABG 02 Trenner 110kV Kringel oben/unten	INF
Trenner Q9	26	14	POSC - positionierbare Schalter	Y	SY	ABG 02 Trenner 110kV Kringel oben/unten	INF

Proprietary data, company confidential. All rights reserved.
Confie a titre de secret d'entreprise. Tous droits reservs.
Comunicado como segredo empresarial. Reservados todos os direitos.
Confiado como secreto industrial. Nos reservamos todos los derechos.
The reproduction, transmission or use of this document or its
is not permitted without express written authority.
Offenders will be liable for damages. All rights, including rights
created by patent grant or registration of a utility model or design, are reserved.

Documentation structur: Standard
Source file: KO050722.ODA

			Date	22.07.2005	VSZ KOSICE	SIEMENS AG ISA TOOLS	Substation control system 6MB Indication field	T = /BS 43
			Drawn	LANG				+
			Appr.					
F	Remarks	Date	Name	Norm	Orig./Repl. 1/Repl. by		Table	-S116 Page

Allocated diagram: Detailbild 6 Kosice

Type: Indication field for symbol/figure

Name	Section	Bay	Logical device	Lower limit
Trenner Q1	R110	EA05	ODPOJOVAC Q1	SCHALTZUSTAND
Trenner Q1	R110	EA18	ODPOJOVAC Q1	SCHALTZUSTAND
Trenner Q1	R110	EA16	ODPOJOVAC Q1	SCHALTZUSTAND
Trenner Q2	R110	EA16	ODPOJOVAC Q2	SCHALTZUSTAND
Trenner Q2	R110	EA18	ODPOJOVAC Q2	SCHALTZUSTAND
Trenner Q2	R110	EA05	ODPOJOVAC Q2	SCHALTZUSTAND
Trenner Q2	R110	EA20	ODPOJOVAC Q2	SCHALTZUSTAND
Trenner Q20	R110	EA05	ODPOJOVAC Q20	SCHALTZUSTAND
Trenner Q7	R110	EA18	ODPOJOVAC Q7	SCHALTZUSTAND
Trenner Q7	R110	EA20	ODPOJOVAC Q7	SCHALTZUSTAND
Trenner Q7	R110	EA05	ODPOJOVAC Q7	SCHALTZUSTAND
Trenner Q8	R110	EA18	ODPOJOVAC ZEMNIACI Q8	SCHALTZUSTAND
Trenner Q8	R110	EA20	ODPOJOVAC ZEMNIACI Q8	SCHALTZUSTAND
Trenner Q9	R110	EA20	ODPOJOVAC Q9	SCHALTZUSTAND
Trenner Q9	R110	EA18	ODPOJOVAC Q9	SCHALTZUSTAND

Proprietary data, company confidential. All rights reserved.
Confie a titre de secret d'entreprise. Tous droits réservés.
Comunicado como segredo empresarial. Reservados todos os direitos.
Confiado como secreto industrial. Nos reservamos todos los derechos.

The reproduction, transmission or use of this document or its is not permitted without express written authority.
Offenders will be liable for damages. All rights, including rights created by patent grant or registration of a utility model or design, are reserved.

Documentation structur: Standard
Source file: KO050722.ODA

Rev.	Remarks	Date	Name	Date	22.07.2005	VSZ KOSICE	SIEMENS AG ISAOOLS	Substation control system 6MB Indication field	T = /BS 44
				Drawn	LANG				+
				Appr.					-S116 Page 44
				Norm		Orig./Repl. 1/Repl. by		Table	

Proprietary data, company confidential. All rights reserved
Confia a tita de secret dentreprise. Tous droits reservs.
Comunicado como segredo empresarial. Reservados todos os direitos.
Confiado como secreto industrial. Nos reservamos todos los derechos.
The reproduction, transmission or use of this document or its contents is not permitted without express written authority. Offenders will be liable for damages. All rights, including rights created by patent grant or registration of a utility model or design, are reserved

Allocated diagramDetailbild 6 Kosice

Name	Position Column	Position Line	Updating on change	Sign reversal	Digits after decimal point	Overall points	Left-justified	Leading zeros	Sign chained	+- suppression	Display attribute group	Section	Bay	Logical device	Lower limit
110KV MW Feld 01 SYN Frequenz 1	68	6	Y	N	2	6	N	N	N	N	ABG 12 SY-Meßwert	R110	EA01/3	SYNCHROMESSWERTE	Frequenz 1
110KV MW Feld 01 SYN Frequenz 2	68	7	Y	N	2	6	N	N	N	N	ABG 12 SY-Meßwert	R110	EA01/3	SYNCHROMESSWERTE	Frequenz 2
110KV MW Feld 01 SYN PHASENDIFFERENZ	67	9	Y	N	1	6	N	N	N	N	ABG 12 SY-Meßwert	R110	EA01/3	SYNCHROMESSWERTE	WINKELDIFFERENZ
110KV MW Feld 01 SYN SPGS-DIFFERENZ	67	8	Y	N	1	6	N	N	N	N	ABG 12 SY-Meßwert	R110	EA01/3	SYNCHROMESSWERTE	SPANNUNGSDIFFERENZ
Frequenz W	40	27	Y	N	1	5	N	N	Y	Y	ABG 08 Meßwert	R110	EA16		FREKVENCIA W
Frequenz W1	71	17	Y	N	1	5	N	N	Y	Y	ABG 08 Meßwert	R110	EA01		FREKVENCIA W1
Frequenz W2	71	25	Y	N	1	5	N	N	Y	Y	ABG 08 Meßwert	R110	EA01		FREKVENCIA W2
MTP L2	52	24	Y	N	1	6	N	N	Y	Y	ABG 08 Meßwert	R110	EA05	MESSWERTE STROM	PRUD L2
MTP L2	23	25	Y	N	1	6	N	N	Y	Y	ABG 08 Meßwert	R110	EA18	MESSWERTE STROM	PRUD L2
MTP L2	10	25	Y	N	1	6	N	N	Y	Y	ABG 08 Meßwert	R110	EA20	MESSWERTE STROM	PRUD L2
Spannung L1	52	23	Y	N	1	6	N	N	Y	Y	ABG 08 Meßwert	R110	EA05	MESSWERTE SPANNUNG	NAPATIE L1
Spannung L1	10	23	Y	N	1	6	N	N	Y	Y	ABG 08 Meßwert	R110	EA20	MESSWERTE SPANNUNG	NAPATIE L1
Spannung L1	23	23	Y	N	1	6	N	N	Y	Y	ABG 08 Meßwert	R110	EA18	MESSWERTE SPANNUNG	NAPATIE L1
Spannung L1-L2	71	14	Y	N	1	5	N	N	Y	Y	ABG 08 Meßwert	R110	EA01	MESSW. SPANNUNG W1	NAPATIE L1-L2
Spannung L1-L2	39	24	Y	N	1	6	N	N	Y	Y	ABG 08 Meßwert	R110	EA16	MESSWERTE SPANNUNG	NAPATIE L1-L2
Spannung L1-L2 W2	71	22	Y	N	1	5	N	N	Y	Y	ABG 08 Meßwert	R110	EA01	MESSW. SPANNUNG W2	NAPATIE L1-L2
Spannung L1-L3	71	15	Y	N	1	5	N	N	Y	Y	ABG 08 Meßwert	R110	EA01	MESSW. SPANNUNG W1	NAPATIE L1-L3
Spannung L1-L3	39	25	Y	N	1	6	N	N	Y	Y	ABG 08 Meßwert	R110	EA16	MESSWERTE SPANNUNG	NAPATIE L1-L3
Spannung L1-L3 W2	71	23	Y	N	1	5	N	N	Y	Y	ABG 08 Meßwert	R110	EA01	MESSW. SPANNUNG W2	NAPATIE L1-L3
Spannung L2-L3	39	26	Y	N	1	6	N	N	Y	Y	ABG 08 Meßwert	R110	EA16	MESSWERTE SPANNUNG	NAPATIE L2-L3
Spannung L2-L3	71	16	Y	N	1	5	N	N	Y	Y	ABG 08 Meßwert	R110	EA01	MESSW. SPANNUNG W1	NAPATIE L2-L3
Spannung L2-L3 W2	71	24	Y	N	1	5	N	N	Y	Y	ABG 08 Meßwert	R110	EA01	MESSW. SPANNUNG W2	NAPATIE L2-L3
WIRKLEISTUNG	10	27	Y	N	1	6	N	N	Y	Y	ABG 08 Meßwert	R110	EA20		VYKON CINNY
WIRKLEISTUNG	23	27	Y	N	1	6	N	N	Y	Y	ABG 08 Meßwert	R110	EA18		VYKON CINNY

Documentation structur: Standard
Source file: KO050722.ODA

Date	22.07.2005	VSZ KOSICE	SIEMENS AG ISATOOLS	Substation control system 6MB Analog value field
Drawn	LANG			
Appr.				
Norm		Orig./Repl. 1/Repl. by		Table

Remarks | Date | Name

T = /BS 45
+
-S116
Page 45

Detailbild 7 Kosice

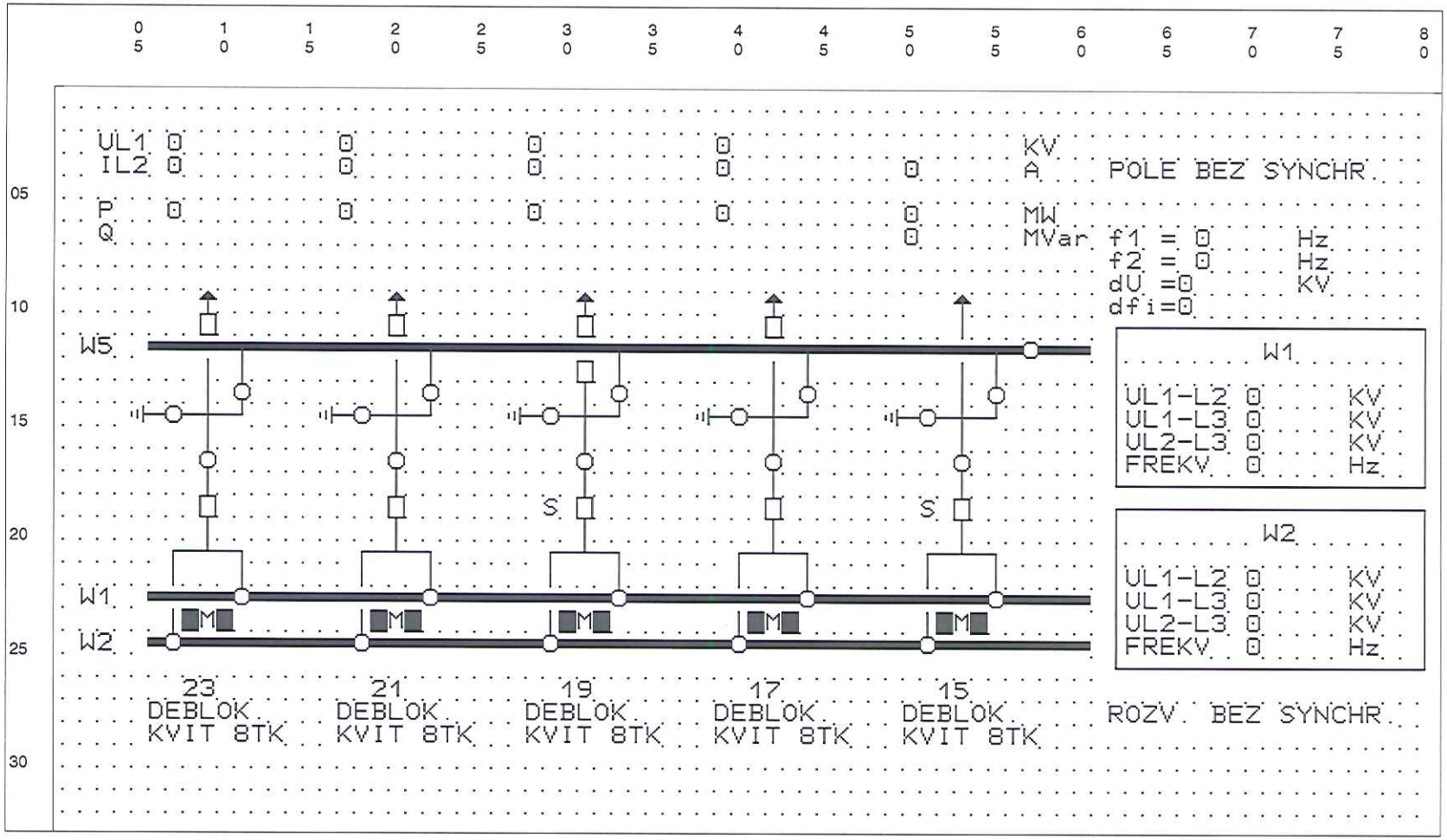

Proprietary data, company confidential. All rights reserved.
Confia a tina da secret dentreprise. Tous droits r,serv,s.
Comunicado como segredo empresarial. Reservados todos os direitos.
Confiado como secreto industrial. Nos reservamos todos los derechos.
The reproduction, transmission or use of this document or its is not permitted without express written authority.
Offenders will be liable for damages. All rights, including rights created by patent grant or registration of a utility model or design, are reserved

Documentation structur: Standard
Source file: K0050722.ODA

Rev.	Remarks	Date	Name	Norm	Date 22.07.2005	Drawn LANG	Appr.	Orig./Repl. 1/Repl. by

VSZ KOSICE

SIEMENS AG ISAOOLS

Substation control system 6MB
Detailed diagram
Table

T = /BS 46
+
-S116
Page 46

Allocated diagram: Detailbild 7 Kosice

Type: Indication field for symbol/figure

Name	Position Column	Position Line	Position recognition	Acknowledgeable	Display as	Display attribute group	Allocation of:
Deblok	50	28		N	SY	ABG 22 Kom/Geh/Schwarz/Cyan	INF
Deblok	39	28		N	SY	ABG 22 Kom/Geh/Schwarz/Cyan	INF
Deblok	28	28		N	SY	ABG 22 Kom/Geh/Schwarz/Cyan	INF
Deblok	17	28		N	SY	ABG 22 Kom/Geh/Schwarz/Cyan	INF
Deblok	6	28		N	SY	ABG 22 Kom/Geh/Schwarz/Cyan	INF
Deblokacia blokovania	41	24	BLOK - positionierbare SF6 Block.	Y	SY	ABG 21 8TK	INF
Deblokacia blokovania	52	24	BLOK - positionierbare SF6 Block.	Y	SY	ABG 21 8TK	INF
Deblokacia blokovania	30	24	BLOK - positionierbare SF6 Block.	Y	SY	ABG 21 8TK	INF
Deblokacia blokovania	8	24	BLOK - positionierbare SF6 Block.	Y	SY	ABG 21 8TK	INF
Deblokacia blokovania	19	24	BLOK - positionierbare SF6 Block.	Y	SY	ABG 21 8TK	INF
Feldsperre	7	10	POAU - postionierbare Feldsperre	N	FIG	ABG 14 Feldsperre gruen 110KV	INF
Feldsperre	51	10	POAU - postionierbare Feldsperre	N	FIG	ABG 14 Feldsperre gruen 110KV	INF
Feldsperre	40	10	POAU - postionierbare Feldsperre	N	FIG	ABG 14 Feldsperre gruen 110KV	INF
Feldsperre	29	10	POAU - postionierbare Feldsperre	N	FIG	ABG 14 Feldsperre gruen 110KV	INF
Feldsperre	18	10	POAU - postionierbare Feldsperre	N	FIG	ABG 14 Feldsperre gruen 110KV	INF
KVIT 8TK	28	29		Y	SY	ABG 23 Kom/Geh Quitt	INF
KVIT 8TK	39	29		Y	SY	ABG 23 Kom/Geh Quitt	INF
KVIT 8TK	17	29		Y	SY	ABG 23 Kom/Geh Quitt	INF
KVIT 8TK	6	29		Y	SY	ABG 23 Kom/Geh Quitt	INF
KVIT 8TK	50	29		Y	SY	ABG 23 Kom/Geh Quitt	INF
Leistungsschalter Gegenseite Feld 17	42	11		Y	SY	ABG 02 Leistungsschalter 110kV	INF
Leistungsschalter Gegenseite Feld 19	31	11		Y	SY	ABG 02 Leistungsschalter 110kV	INF
Leistungsschalter Gegenseite Feld 21	20	11		Y	SY	ABG 02 Leistungsschalter 110kV	INF
Leistungsschalter Gegenseite Feld 23	9	11		Y	SY	ABG 02 Leistungsschalter 110kV	INF
Leistungsschalter Q0	31	19	POINTERN - positionierbare LS/Intern	Y	SY	ABG 02 Leistungsschalter 110kV	INF
Leistungsschalter Q01	31	13	POSC - positionierbare Schalter	Y	SY	ABG 02 Leistungsschalter 110kV	INF
Leistungsschalter QM	9	19	POSC - positionierbare Schalter	Y	SY	ABG 02 Leistungsschalter 110kV	INF
Leistungsschalter QM	53	19	POINTERN - positionierbare LS/Intern	Y	SY	ABG 02 Leistungsschalter 110kV	INF
Leistungsschalter QM	20	19	POSC - positionierbare Schalter	Y	SY	ABG 02 Leistungsschalter 110kV	INF
Leistungsschalter QM	42	19	POSC - positionierbare Schalter	Y	SY	ABG 02 Leistungsschalter 110kV	INF
POLE BEZ SYNCHR.	62	4		N	SY	ABG 22 Kom/Geh/Schwarz/Cyan	INF
Quitt SF6	43	24	KVIT - postionierbare SF6 Quittierung	Y	SY	ABG 21 8TK	INF

Proprietary data, company confidential. All rights reserved
Confia a tine de secret de entreprise. Tous droits s.erva.
Comunicado como segredo empresarial. Reservados todos os direitos.
Comunicado como secreto industrial. Nos reservamos todos los derechos.
The reproduction, transmission or use of this document or its
is not permitted without expres written authority.
Offenders will be liable for damages. All rights, including rights
created by patent grant or registration of a utility model or design, are reserved

Documentation structur: Standard
Source file: KO050722.ODA

Date	22.07.2005
Drawn	LANG
Appr.	

VSZ KOSICE

SIEMENS AG
ISAOOLS

Substation control system 6MB
Indication field
Table

T = /BS 47
+
-S116
Page 7

Remarks | Date | Name Norm | Orig./Repl. 1/Repl. by

Allocated diagram Detailbild 7 Kosice

Type: Indication field for symbol/figure

Name	Section	Bay	Logical device	Lower limit
Deblok	R110	EA15		PREVADZKA S1
Deblok	R110	EA17		PREVADZKA S1
Deblok	R110	EA19		PREVADZKA S1
Deblok	R110	EA21		PREVADZKA S1
Deblok	R110	EA23		PREVADZKA S1
Deblokacia blokovania	R110	EA17		DEBLOKACIA BLOKOVANIA
Deblokacia blokovania	R110	EA15		DEBLOKACIA BLOKOVANIA
Deblokacia blokovania	R110	EA19		DEBLOKACIA BLOKOVANIA
Deblokacia blokovania	R110	EA23		DEBLOKACIA BLOKOVANIA
Deblokacia blokovania	R110	EA21		DEBLOKACIA BLOKOVANIA
Feldsperre	R110	EA23		ZABLOKOVANI POLE
Feldsperre	R110	EA15		ZABLOKOVANI POLE
Feldsperre	R110	EA17		ZABLOKOVANI POLE
Feldsperre	R110	EA19		ZABLOKOVANI POLE
Feldsperre	R110	EA21		ZABLOKOVANI POLE
KVIT 8TK	R110	EA19		KVIT 8TK
KVIT 8TK	R110	EA17		KVIT 8TK
KVIT 8TK	R110	EA21		KVIT 8TK
KVIT 8TK	R110	EA23		KVIT 8TK
KVIT 8TK	R110	EA15		KVIT 8TK
Leistungsschalter Gegenseite Feld 17	T40-10	POLE17	PROTILAHLY VYPINAC	SCHALTZUSTAND
Leistungsschalter Gegenseite Feld 19	T02-16	POLE19	PROTILAHLY VYPINAC	SCHALTZUSTAND
Leistungsschalter Gegenseite Feld 21	T??-??	POLE21	PROTILAHLY VYPINAC	SCHALTZUSTAND
Leistungsschalter Gegenseite Feld 23	T50-27	POLE23	PROTILAHLY VYPINAC	SCHALTZUSTAND
Leistungsschalter Q0	R110	EA19	VYPINAC Q0	SCHALTZUSTAND
Leistungsschalter Q01	R110	EA19	VYPINAC Q01	SCHALTZUSTAND
Leistungsschalter QM	R110	EA23	VYPINAC Q0	SCHALTZUSTAND
Leistungsschalter QM	R110	EA15	VYPINAC Q0	SCHALTZUSTAND
Leistungsschalter QM	R110	EA21	VYPINAC Q0	SCHALTZUSTAND
Leistungsschalter QM	R110	EA17	VYPINAC Q0	SCHALTZUSTAND
POLE BEZ SYNCHR.	R110	SPOL		VYPNUTIE SYNCHRONIZACIE
Quitt SF6	R110	EA17		KVITOVANIE

Proprietary data, company confidential. All rights reserved.
Confie a titre de secret d'entreprise. Tous droits réservés.
Comunicado como segredo empresarial. Reservados todos os direitos.
Confiado como secreto industrial. Nos reservamos todos los derechos.
The reproduction, transmission or use of this document or its is not permitted without expres written authority.
Offenders will be liable for damages. All rights, including rights created by patent grant or registration of a utility model or design, are reserved.

Documentation structur: Standard
Source file: KO050722.ODA

Rev.	Remarks	Date	Name	Date	22.07.2005
				Drawn	LANG
				Appr.	
				Norm	

VSZ
KOSICE

Orig./Repl. 1/Repl. by

SIEMENS AG
ISA TOOLS

Substation control system 6MB
Indication field

Table

T = /BS 48
+

-S116

Allocated diagram Detailbild 7 Kosice
Type: Indication field for symbol/figure

Name	Position Column	Position Line	Position recognition	Acknowledgeable	Display as	Display attribute group	Allocation of:
Quitt SF6	54	24	KVIT - postionierbare SF6 Quittierung	Y	SY	ABG 21 8TK	INF
Quitt SF6	21	24	KVIT - postionierbare SF6 Quittierung	Y	SY	ABG 21 8TK	INF
Quitt SF6	32	24	KVIT - postionierbare SF6 Quittierung	Y	SY	ABG 21 8TK	INF
Quitt SF6	10	24	KVIT - postionierbare SF6 Quittierung	Y	SY	ABG 21 8TK	INF
ROZV. BEZ SYNCHR.	62	28		N	SY	ABG 22 Kom/Geh/Schwarz/Cyan	INF
S5 M	20	24		N	SY	ABG 24 Kom/Geh/Weiß/Schwarz	INF
S5 M	31	24		N	SY	ABG 24 Kom/Geh/Weiß/Schwarz	INF
S5 M	9	24		N	SY	ABG 24 Kom/Geh/Weiß/Schwarz	INF
S5 M	53	24		N	SY	ABG 24 Kom/Geh/Weiß/Schwarz	INF
S5 M	42	24		N	SY	ABG 24 Kom/Geh/Weiß/Schwarz	INF
Trenner Q1	11	23	POSC - positionierbare Schalter	Y	SY	ABG 02 Trenner 110kV Kringel oben	INF
Trenner Q1	22	23	POSC - positionierbare Schalter	Y	SY	ABG 02 Trenner 110kV Kringel oben	INF
Trenner Q1	44	23	POSC - positionierbare Schalter	Y	SY	ABG 02 Trenner 110kV Kringel oben	INF
Trenner Q1	33	23	POSC - positionierbare Schalter	Y	SY	ABG 02 Trenner 110kV Kringel oben	INF
Trenner Q1	55	23	POSC - positionierbare Schalter	Y	SY	ABG 02 Trenner 110kV Kringel oben	INF
Trenner Q2	7	25	POSC - positionierbare Schalter	Y	SY	ABG 02 Trenner 110kV Kringel oben	INF
Trenner Q2	29	25	POSC - positionierbare Schalter	Y	SY	ABG 02 Trenner 110kV Kringel oben	INF
Trenner Q2	40	25	POSC - positionierbare Schalter	Y	SY	ABG 02 Trenner 110kV Kringel oben	INF
Trenner Q2	51	25	POSC - positionierbare Schalter	Y	SY	ABG 02 Trenner 110kV Kringel oben	INF
Trenner Q2	18	25	POSC - positionierbare Schalter	Y	SY	ABG 02 Trenner 110kV Kringel oben	INF
Trenner Q7	55	14	POSC - positionierbare Schalter	Y	SY	ABG 02 Trenner 110kV Kringel oben/unten	INF
Trenner Q7	11	14	POSC - positionierbare Schalter	Y	SY	ABG 02 Trenner 110kV Kringel oben/unten	INF
Trenner Q7	44	14	POSC - positionierbare Schalter	Y	SY	ABG 02 Trenner 110kV Kringel oben/unten	INF
Trenner Q7	33	14	POSC - positionierbare Schalter	Y	SY	ABG 02 Trenner 110kV Kringel oben/unten	INF
Trenner Q7	22	14	POSC - positionierbare Schalter	Y	SY	ABG 02 Trenner 110kV Kringel oben/unten	INF
Trenner Q71	57	12	POSC - positionierbare Schalter	Y	SY	ABG 02 Trenner 110kV ohne Kringel	INF
Trenner Q8	29	15	POSC - positionierbare Schalter	Y	SY	ABG 02 Trenner 110kV	INF
Trenner Q8	51	15	POSC - positionierbare Schalter	Y	SY	ABG 02 Trenner 110kV	INF
Trenner Q8	7	15	POSC - positionierbare Schalter	Y	SY	ABG 02 Trenner 110kV	INF
Trenner Q8	18	15	POSC - positionierbare Schalter	Y	SY	ABG 02 Trenner 110kV	INF
Trenner Q8	40	15	POSC - positionierbare Schalter	Y	SY	ABG 02 Trenner 110kV	INF
Trenner Q9	20	17	POSC - positionierbare Schalter	Y	SY	ABG 02 Trenner 110kV Kringel oben/unten	INF

Proprietary data, company confidential. All rights reserved.
Confie a titre de secret d'entreprise. Tous droits réservés.
Comunicado como segredo empresarial. Reservados todos os direitos.
Confiado como secreto industrial. Nos reservamos todos los derechos.
The reproduction, transmission or use of this document or its is not permitted without expres written authority.
Offenders will be liable for damages. All rights, including rights created by patent grant or registration of a utility model or design, are reserved.

Documentation structur: Standard
Source file: KO050722.ODA

			Date	22.07.2005	VSZ KOSICE	SIEMENS AG ISA TOOLS	Substation control system 6MB Indication field
			Drawn	LANG			
			Appr.				
R	Remarks	Date	Name	Norm	Orig./Repl. 1/Repl. by		Table

T = /BS 49
+
-S116
Page 49

Allocated diagram Detailbild 7 Kosice

Type: Indication field for symbol/figure

Name	Section	Bay	Logical device	Lower limit
Quitt SF6	R110	EA15		KVITOVANIE
Quitt SF6	R110	EA21		KVITOVANIE
Quitt SF6	R110	EA19		KVITOVANIE
Quitt SF6	R110	EA23		KVITOVANIE
ROZV. BEZ SYNCHR.	R110	EA01		VYPNUTIE SYNCHRONIZACIE
S5 M	R110	EA21		S5 POLOHA VYPN./MIESTNE
S5 M	R110	EA19		S5 POLOHA VYPN./MIESTNE
S5 M	R110	EA23		S5 POLOHA VYPN./MIESTNE
S5 M	R110	EA15		S5 POLOHA VYPN./MIESTNE
S5 M	R110	EA17		S5 POLOHA VYPN./MIESTNE
Trenner Q1	R110	EA23	ODPOJOVAC Q1	SCHALTZUSTAND
Trenner Q1	R110	EA21	ODPOJOVAC Q1	SCHALTZUSTAND
Trenner Q1	R110	EA17	ODPOJOVAC Q1	SCHALTZUSTAND
Trenner Q1	R110	EA19	ODPOJOVAC Q1	SCHALTZUSTAND
Trenner Q1	R110	EA15	ODPOJOVAC Q1	SCHALTZUSTAND
Trenner Q2	R110	EA23	ODPOJOVAC Q2	SCHALTZUSTAND
Trenner Q2	R110	EA19	ODPOJOVAC Q2	SCHALTZUSTAND
Trenner Q2	R110	EA17	ODPOJOVAC Q2	SCHALTZUSTAND
Trenner Q2	R110	EA15	ODPOJOVAC Q2	SCHALTZUSTAND
Trenner Q2	R110	EA21	ODPOJOVAC Q2	SCHALTZUSTAND
Trenner Q7	R110	EA15	ODPOJOVAC Q7	SCHALTZUSTAND
Trenner Q7	R110	EA23	ODPOJOVAC Q7	SCHALTZUSTAND
Trenner Q7	R110	EA17	ODPOJOVAC Q7	SCHALTZUSTAND
Trenner Q7	R110	EA19	ODPOJOVAC Q7	SCHALTZUSTAND
Trenner Q7	R110	EA21	ODPOJOVAC Q7	SCHALTZUSTAND
Trenner Q71	R110	EA15	ODPOJOVAC POM.PRIP.Q71	SCHALTZUSTAND
Trenner Q8	R110	EA19	ODPOJOVAC ZEMNIACI Q8	SCHALTZUSTAND
Trenner Q8	R110	EA15	ODPOJOVAC ZEMNIACI Q8	SCHALTZUSTAND
Trenner Q8	R110	EA23	ODPOJOVAC ZEMNIACI Q8	SCHALTZUSTAND
Trenner Q8	R110	EA21	ODPOJOVAC ZEMNIACI Q8	SCHALTZUSTAND
Trenner Q8	R110	EA17	ODPOJOVAC ZEMNIACI Q8	SCHALTZUSTAND
Trenner Q9	R110	EA21	ODPOJOVAC Q9	SCHALTZUSTAND

Proprietary data, company confidential. All rights reserved.
Confie a titre de secret d'entreprise. Tous droits réservés.
Comunicado como segredo empresarial. Reservados todos os direitos.
Confiado como secreto industrial. Nos reservamos todos los derechos.

The reproduction, transmission or use of this document or its is not permitted without express written authority.
Offenders will be liable for damages. All rights, including rights created by patent grant or registration of a utility model or design, are reserved.

Documentation structur: Standard
Source file: KO050722.ODA

Rev.	Remarks	Date	Name	Date	22.07.2005	VSZ KOSICE	SIEMENS AG ISA TOOLS	Substation control system 6MB Indication field	T = /BS 50
				Drawn	LANG				+
				Appr.					
				Norm		Orig./Repl. 1/Repl. by		Table	-S116 Page 50

Allocated diagram: Detailbild 7 Kosice

Type: Indication field for symbol/figure

Name	Position Column	Position Line	Position recognition	Acknowledgeable	Display as	Display attribute group	Allocation of:
Trenner Q9	53	17	POSC - positionierbare Schalter	Y	SY	ABG 02 Trenner 110kV Kringel oben/unten	INF
Trenner Q9	9	17	POSC - positionierbare Schalter	Y	SY	ABG 02 Trenner 110kV Kringel oben/unten	INF
Trenner Q9	42	17	POSC - positionierbare Schalter	Y	SY	ABG 02 Trenner 110kV Kringel oben/unten	INF
Trenner Q9	31	17	POSC - positionierbare Schalter	Y	SY	ABG 02 Trenner 110kV Kringel oben/unten	INF

Proprietary data, company confidential. All rights reserved.
Confie a titre de secret d'entreprise. Tous droits reservs.
Comunicado como segredo empresarial. Reservados todos os direitos.
Confiado como secreto industrial. Nos reservamos todos los derechos.

The reproduction, transmission or use of this document or its is not permitted without express written authority.
Offenders will be liable for damages. All rights, including rights created by patent grant or registration of a utility model or design, are reserved.

Documentation structur: Standard
Source file: KO050722.ODA

			Date	22.07.2005	VSZ KOSICE	SIEMENS AG ISAOOLS	Substation control system 6MB Indication field
			Drawn	LANG			
			Appr.				
R	Remarks	Date	Name	Norm	Orig./Repl. 1/Repl. by		Table

T = /BS 51
+
-S116
Page 51

Allocated diagram Detailbild 7 Kosice

Type: Indication field for symbol/figure

Name	Section	Bay	Logical device	Lower limit
Trenner Q9	R110	EA15	ODPOJOVAC Q9	SCHALTZUSTAND
Trenner Q9	R110	EA23	ODPOJOVAC Q9	SCHALTZUSTAND
Trenner Q9	R110	EA17	ODPOJOVAC Q9	SCHALTZUSTAND
Trenner Q9	R110	EA19	ODPOJOVAC Q9	SCHALTZUSTAND

Proprietary data, company confidential. All rights reserved.
Confie a titre de secret d'entreprise. Tous droits reservés.
Comunicado como segredo empresarial. Reservados todos os direitos.
Confiado como secreto industrial. Nos reservamos todos los derechos.

The reproduction, transmission or use of this document or its is not permitted without expres written authority.
Offenders will be liable for damages. All rights, including rights created by patent grant or registration of a utility model or design, are reserved

Documentation structur: Standard
Source file: KO050722.ODA

Rev.	Remarks	Date	Name	Date	22.07.2005	VSZ KOSICE	SIEMENS AG ISA TOOLS	Substation control system 6MB Indication field	T = /BS 52
				Drawn	LANG				+
				Appr.					
				Norm		Orig./Repl. 1/Repl. by		Table	-S116 Page 52

Proprietary data, company confidential. All rights reserved
Con e a the de secret de empresa. Todos os direitos reservados
Comunicado como segredo empresarial. Reservamos todos os direitos.
Confidencial como secreto industrial. Nos reservamos todos los derechos.

The reproduction, transmission or use of this document or its contents is not permitted without expres written authority. Offenders will be liable for damages. All rights, including rights created by patent grant or registration of a utility model or design, are reserved

Documentation structur: Standard
Source file: KO050722.ODA

Allocated diagramDetailbild 7 Kosice

Name	Position Column	Position Line	Updating on change	Sign reversal	Digits after decimal point	Overall points	Left-justified	Leading zeros	Sign chained	+- suppression	Display attribute group	Section	Bay	Logical device	Lower limit
110KV MW Feld 01 SYN Frequenz 1	67	7	Y	N	2	6	N	N	N	N	ABG 12 SY-Meßwert	R110	EA01/3	SYNCHROMESSWERTE	Frequenz 1
110KV MW Feld 01 SYN Frequenz 2	67	8	Y	N	2	6	N	N	N	N	ABG 12 SY-Meßwert	R110	EA01/3	SYNCHROMESSWERTE	Frequenz 2
110KV MW Feld 01 SYN PHASENDIFFERENZ	66	10	Y	N	1	6	N	N	N	N	ABG 12 SY-Meßwert	R110	EA01/3	SYNCHROMESSWERTE	WINKELDIFFERENZ
110KV MW Feld 01 SYN SPGS-DIFFERENZ	66	9	Y	N	1	6	N	N	N	N	ABG 12 SY-Meßwert	R110	EA01/3	SYNCHROMESSWERTE	SPANNUNGSDIFFERENZ
Blindleistung	50	7	Y	N	1	6	N	N	Y	Y	ABG 08 Meßwert	R110	EA15		VYKON JALOVY
Frequenz W1	70	17	Y	N	1	5	N	N	Y	Y	ABG 08 Meßwert	R110	EA01		FREKVENCIA W1
Frequenz W2	70	25	Y	N	1	5	N	N	Y	Y	ABG 08 Meßwert	R110	EA01		FREKVENCIA W2
MTP L2	7	4	Y	N	1	6	N	N	Y	Y	ABG 08 Meßwert	R110	EA23	MESSWERTE STROM	PRUD L2
MTP L2	50	4	Y	N	1	6	N	N	Y	Y	ABG 08 Meßwert	R110	EA15	MESSWERTE STROM	PRUD L2
MTP L2	39	4	Y	N	1	6	N	N	Y	Y	ABG 08 Meßwert	R110	EA17	MESSWERTE STROM	PRUD L2
MTP L2	28	4	Y	N	1	6	N	N	Y	Y	ABG 08 Meßwert	R110	EA19	MESSWERTE STROM	PRUD L2
MTP L2	17	4	Y	N	1	6	N	N	Y	Y	ABG 08 Meßwert	R110	EA21	MESSWERTE STROM	PRUD L2
Spannung L1	17	3	Y	N	1	6	N	N	Y	Y	ABG 08 Meßwert	R110	EA21	MESSWERTE SPANNUNG	NAPATIE L1
Spannung L1	7	3	Y	N	1	6	N	N	Y	Y	ABG 08 Meßwert	R110	EA23	MESSWERTE SPANNUNG	NAPATIE L1
Spannung L1	39	3	Y	N	1	6	N	N	Y	Y	ABG 08 Meßwert	R110	EA17	MESSWERTE SPANNUNG	NAPATIE L1
Spannung L1	28	3	Y	N	1	6	N	N	Y	Y	ABG 08 Meßwert	R110	EA19	MESSWERTE SPANNUNG	NAPATIE L1
Spannung L1-L2	70	14	Y	N	1	5	N	N	Y	Y	ABG 08 Meßwert	R110	EA01	MESSW. SPANNUNG W1	NAPATIE L1-L2
Spannung L1-L2 W2	70	22	Y	N	1	5	N	N	Y	Y	ABG 08 Meßwert	R110	EA01	MESSW. SPANNUNG W2	NAPATIE L1-L2
Spannung L1-L3	70	15	Y	N	1	5	N	N	Y	Y	ABG 08 Meßwert	R110	EA01	MESSW. SPANNUNG W1	NAPATIE L1-L3
Spannung L1-L3 W2	70	23	Y	N	1	5	N	N	Y	Y	ABG 08 Meßwert	R110	EA01	MESSW. SPANNUNG W2	NAPATIE L1-L3
Spannung L2-L3	70	16	Y	N	1	5	N	N	Y	Y	ABG 08 Meßwert	R110	EA01	MESSW. SPANNUNG W1	NAPATIE L2-L3
Spannung L2-L3 W2	70	24	Y	N	1	5	N	N	Y	Y	ABG 08 Meßwert	R110	EA01	MESSW. SPANNUNG W2	NAPATIE L2-L3
Wirkleistung	50	6	Y	N	1	6	N	N	Y	Y	ABG 08 Meßwert	R110	EA15		VYKON CINNY
WIRKLEISTUNG	17	6	Y	N	1	6	N	N	Y	Y	ABG 08 Meßwert	R110	EA21		VYKON CINNY
WIRKLEISTUNG	28	6	Y	N	1	6	N	N	Y	Y	ABG 08 Meßwert	R110	EA19		VYKON CINNY
WIRKLEISTUNG	39	6	Y	N	1	6	N	N	Y	Y	ABG 08 Meßwert	R110	EA17		VYKON CINNY
WIRKLEISTUNG	7	6	Y	N	1	6	N	N	Y	Y	ABG 08 Meßwert	R110	EA23		VYKON CINNY

Detailbild TRAFO 1

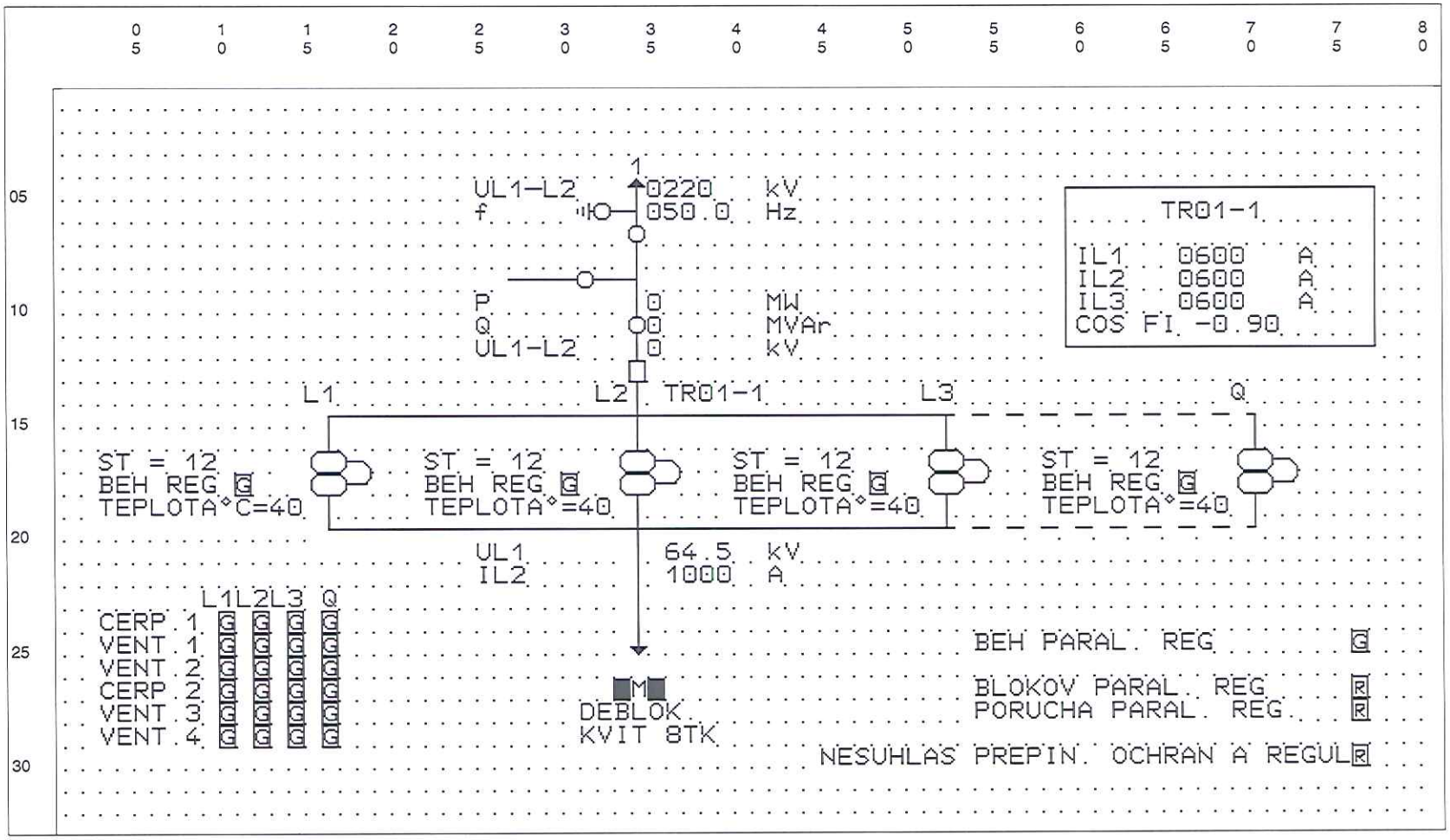

The reproduction, transmission or use of this document or its contents is not permitted without express written authority. Offenders will be liable for damages. All rights, including rights created by patent grant or registration of a utility model or design, are reserved. Proprietary data, company confidential. All rights reserved. Confia a tirre de secret d'entreprise. Tous droits reservs. Comunicado como segredo empresarial. Reservados todos os direitos. Confiado como secreto industrial. Nos reservamos todos los derechos.

Documentation structur: Standard
Source file: KO050722.ODA

Rev.	Remarks	Date	Name	Date	22.07.2005	VSZ KOSICE	SIEMENS AG ISA TOOLS	Substation control system 6MB Detailed diagram	T = /BS 54
				Drawn	LANG				+
				Appr.					-S116 Page 54
				Norm		Orig./Repl. 1/Repl. by		Table	

Allocated diagram Detailbild TRAFO 1

Type: Selection field with information specification

Name	Position Column	Position Line	Position recognition	Display as	Display attribute group	Allocation of:	Section	Bay	Logical device	Lower limit	Position recognition
TRAFOSTEUERUNG	50	17	AFTR - Anwahlfeld Trafo	SY	ABG 00 Anwahl Trafo	INF	R220	T201	L3 TRAFO	ODBOCKA VO FAZE	
TRAFOSTEUERUNG	14	17	AFTR - Anwahlfeld Trafo	SY	ABG 00 Anwahl Trafo	INF	R220	T201	L1 TRAFO	ODBOCKA VO FAZE	
TRAFOSTEUERUNG	68	17	AFTR - Anwahlfeld Trafo	SY	ABG 00 Anwahl Trafo	INF	R220	TR.	Q TRAFO	ODBOCKA VO FAZE	
TRAFOSTEUERUNG	32	17	AFTR - Anwahlfeld Trafo	SY	ABG 00 Anwahl Trafo	INF	R220	T201	L2 TRAFO	ODBOCKA VO FAZE	
TRAFOSTEUERUNG	36	14	AFTR - alle 3 Trafos gemeinsam	SY	ABG 00 Anwahl Trafo 3Polig	INF	R220	T201		PARALELNA REGULACIA	

Proprietary data, company confidential. All rights reserved.
Confie a titre de secret d'entreprise. Tous droits reservés.
Comunicado como segredo empresarial. Reservados todos os direitos.
Confiado como secreto industrial. Nos reservamos todos los derechos.

The reproduction, transmission or use of this document or its is not permitted without express written authority.
Offenders will be liable for damages. All rights, including rights created by patent grant or registration of a utility model or design, are reserved.

Documentation structur: Standard
Source file: KO050722.ODA

			Date	22.07.2005	VSZ KOSICE	SIEMENS AG ISA TOOLS	Substation control system 6MB Selection field	T = /BS 55
			Drawn	LANG				+
			Appr.					
R	Remarks	Date	Name	Norm	Orig./Repl. 1/Repl. by		Table	-S116 Page

Allocated diagram: Detailbild TRAFO 1

Type: Indication field for symbol/figure

Name	Position Column	Position Line	Position recognition	Acknowledgeable	Display as	Display attribute group	Allocation of:
BEH. PARAL. REG	54	25		Y	SY	ABG 23 Kom/Geh Quitt	INF
BLOKOV. PARALEL. REGULACIE	54	27		Y	SY	ABG 23 Kom/Geh Quitt	INF
CERPALDO 1	16	24		Y	SY	ABG 23 Kom/Geh Quitt	INF
CERPALDO 1	12	24		Y	SY	ABG 23 Kom/Geh Quitt	INF
CERPALDO 1	14	24		Y	SY	ABG 23 Kom/Geh Quitt	INF
CERPALDO 1	10	24		Y	SY	ABG 23 Kom/Geh Quitt	INF
CERPALDO 2	16	27		Y	SY	ABG 23 Kom/Geh Quitt	INF
CERPALDO 2	10	27		Y	SY	ABG 23 Kom/Geh Quitt	INF
CERPALDO 2	14	27		Y	SY	ABG 23 Kom/Geh Quitt	INF
CERPALDO 2	12	27		Y	SY	ABG 23 Kom/Geh Quitt	INF
Deblok	31	28		N	SY	ABG 22 Kom/Geh/Schwarz/Cyan	INF
Deblokacia blokovania	33	27	BLOK - positionierbare SF6 Block.	Y	SY	ABG 21 8TK	INF
Feldsperre	32	5	POAU - postionierbare Feldsperre	N	FIG	ABG 14 Feldsperre rot 220KV	INF
KVIT 8TK	31	29		Y	SY	ABG 23 Kom/Geh Quitt	INF
Laufkontakt	22	18		N	SY	ABG 23 Kom/Geh Quitt	INF
Laufkontakt	40	18		N	SY	ABG 23 Kom/Geh Quitt	INF
Laufkontakt	3	18		N	SY	ABG 23 Kom/Geh Quitt	INF
Laufkontakt	58	18		N	SY	ABG 23 Kom/Geh Quitt	INF
Leistungsschalter QM	34	13	POSC - positionierbare Schalter	Y	SY	ABG 02 Leistungsschalter 220kV	INF
NESUHLAS PREPIN OCHRAN A REG	45	30		Y	SY	ABG 23 Kom/Geh Quitt	INF
Q	69	14		N	SY	ABG 26 Kom/Geh/Schwarz/Rot/Weiß "Q"	INF
Quitt SF6	35	27	KVIT - postionierbare SF6 Quittierung	Y	SY	ABG 21 8TK	INF
S5 M	34	27		N	SY	ABG 24 Kom/Geh/Weiß/Schwarz	INF
STUFENGLEICHHEIT	54	28		N	SY	ABG 18 Stufengleichheit	INF
TRAFO	45	17		Y	SY	ABG 11 Stufenstellung	INF
TRAFO	8	17		Y	SY	ABG 11 Stufenstellung	INF
TRAFO	63	17		Y	SY	ABG 11 Stufenstellung	INF
TRAFO	27	17		Y	SY	ABG 11 Stufenstellung	INF
Trenner Q1	34	11	POSC - positionierbare Schalter	Y	SY	ABG 02 Trenner 220kV Kringel oben/unten	INF
Trenner Q6	34	7	POSC - positionierbare Schalter	Y	SY	ABG 02 Trenner 220kV Kringel oben/unten	INF
Trenner Q7	31	9	POSC - positionierbare Schalter	Y	SY	ABG 02 Trenner 220kV	INF
Trenner QE6	32	6	POSC - positionierbare Schalter	Y	SY	ABG 02 Trenner 220kV	INF

Proprietary data, company confidential. All rights reserved.
Confie a titre de secret d'entreprise. Tous droits réservés.
Comunicado como segredo empresarial. Reservados todos os direitos.
Confiado como secreto industrial. Nos reservamos todos los derechos.
The reproduction, transmission or use of this document or its is not permitted without express written authority.
Offenders will be liable for damages. All rights, including rights created by patent grant or registration of a utility model or design, are reserved.

Documentation structur: Standard
Source file: KO050722.ODA

Rev.	Remarks	Date	Name	Date	22.07.2005	VSZ KOSICE	SIEMENS AG ISAOOLS	Substation control system 6MB Indication field	T = /BS 56
				Drawn	LANG				+
				Appr.					-S116
				Norm		Orig./Repl. 1/Repl. by		Table	Page 56

Allocated diagram Detailbild TRAFO 1

Type: Indication field for symbol/figure

Name	Section	Bay	Logical device	Lower limit
BEH. PARAL. REG	R220	T201		BEH PARELELNEJ REGULACIE
BLOKOV. PARALEL. REGULACIE	R220	T201		BLOKOV. PARALEL. REGULACIE
CERPALDO 1	R220	TR.	Q	PORUCHA CERPADLA 1
CERPALDO 1	R220	T201	L2	PORUCHA CERPADLA 1
CERPALDO 1	R220	T201	L3	PORUCHA CERPADLA 1
CERPALDO 1	R220	T201	L1	PORUCHA CERPADLA 1
CERPALDO 2	R220	TR.	Q	PORUCHA CERPADLA 2
CERPALDO 2	R220	T201	L1	PORUCHA CERPADLA 2
CERPALDO 2	R220	T201	L3	PORUCHA CERPADLA 2
CERPALDO 2	R220	T201	L2	PORUCHA CERPADLA 2
Deblok	R220	DA01		PREVADZKA S1
Deblokacia blokovania	R220	DA01		DEBLOKACIA BLOKOVANIA
Feldsperre	R220	DA01		ZABLOKOVANI POLE
KVIT 8TK	R220	DA01		KVIT 8TK
Laufkontakt	R220	T201	L2	BEH REGULACIE VO FAZE L2
Laufkontakt	R220	T201	L3	BEH REGULACIE VO FAZE L3
Laufkontakt	R220	T201	L1	BEH REGULACIE VO FAZE L1
Laufkontakt	R220	TR.	Q	BEH REGULACIE V REZERV.JEDN.
Leistungsschalter QM	R220	DA01	VYPINAC Q0	SCHALTZUSTAND
NESUHLAS PREPIN OCHRAN A REG	R220	DA01		NESUHLAS PREPIN.OCHR.A REGUL
Q	R220	DA01		Q-JEDNOTKA NEZARADENA DO L1
Quitt SF6	R220	DA01		KVITOVANIE
S5 M	R220	DA01		S5 POLOHA VYPN./MIESTNE
STUFENGLEICHHEIT	R220	T201		PORUCHA PARAL.REG.
TRAFO	R220	T201	L3 TRAFO	ODBOCKA ST.C.
TRAFO	R220	T201	L1 TRAFO	ODBOCKA ST.C.
TRAFO	R220	TR.	Q TRAFO	ODBOCKA ST.C.
TRAFO	R220	T201	L2 TRAFO	ODBOCKA ST.C.
Trenner Q1	R220	DA01	ODPOJOVAC Q1	SCHALTZUSTAND
Trenner Q6	R220	DA01	ODPOJOVAC Q6	SCHALTZUSTAND
Trenner Q7	R220	DA01	ODPOJOVAC Q7	SCHALTZUSTAND
Trenner QE6	R220	DA01	ODPOJOVAC QE6	SCHALTZUSTAND

Proprietary data, company confidential. All rights reserved.
Confie a titre de secret d'entreprise. Tous droits r,serv,s.
Comunicado como segredo empresarial. Reservados todos os direitos.
Confiado como secreto industrial. Nos reservamos todos los derechos.

The reproduction, transmission or use of this document or its is not permitted without express written authority.
Offenders will be liable for damages. All rights, including rights created by patent grant or registration of a utility model or design, are reserved.

Documentation structur: Standard
Source file: KO050722.ODA

Remarks	Date	Name	Date	22.07.2005	VSZ KOSICE	SIEMENS AG ISAOOLS	Substation control system 6MB Indication field	T = /BS 57
			Drawn	LANG				+
			Appr.					
			Norm		Orig./Repl. 1/Repl. by		Table	-S116 Page 57

Allocated diagram: Detailbild TRAFO 1

Type: Indication field for symbol/figure

Name	Position Column	Position Line	Position recognition	Acknowledgeable	Display as	Display attribute group	Allocation of:	
VENTILATOR 1	12	25		Y	SY	ABG 23 Kom/Geh Quitt	INF	
VENTILATOR 1	14	25		Y	SY	ABG 23 Kom/Geh Quitt	INF	
VENTILATOR 1	16	25		Y	SY	ABG 23 Kom/Geh Quitt	INF	
VENTILATOR 1	10	25		Y	SY	ABG 23 Kom/Geh Quitt	INF	
VENTILATOR 2	16	26		Y	SY	ABG 23 Kom/Geh Quitt	INF	
VENTILATOR 2	12	26		Y	SY	ABG 23 Kom/Geh Quitt	INF	
VENTILATOR 2	10	26		Y	SY	ABG 23 Kom/Geh Quitt	INF	
VENTILATOR 2	14	26		Y	SY	ABG 23 Kom/Geh Quitt	INF	
VENTILATOR 3	12	28		Y	SY	ABG 23 Kom/Geh Quitt	INF	
VENTILATOR 3	16	28		Y	SY	ABG 23 Kom/Geh Quitt	INF	
VENTILATOR 3	10	28		Y	SY	ABG 23 Kom/Geh Quitt	INF	
VENTILATOR 3	14	28		Y	SY	ABG 23 Kom/Geh Quitt	INF	
VENTILATOR 4	12	29		Y	SY	ABG 23 Kom/Geh Quitt	INF	
VENTILATOR 4	14	29		Y	SY	ABG 23 Kom/Geh Quitt	INF	
VENTILATOR 4	10	29		Y	SY	ABG 23 Kom/Geh Quitt	INF	
VENTILATOR 4	16	29		Y	SY	ABG 23 Kom/Geh Quitt	INF	
X	15	14		N	SY	ABG 25 Kom/Geh/Schwarz/Rot/Weiß	INF	
Y	32	14		N	SY	ABG 25 Kom/Geh/Schwarz/Rot/Weiß	INF	
Z	51	14		N	SY	ABG 25 Kom/Geh/Schwarz/Rot/Weiß	INF	

Proprietary data, company confidential. All rights reserved.
Confia a titre de secret d'entreprise. Tous droits réservés.
Comunicado como secreto empresarial. Reservados todos os direitos.
Confiado como secreto industrial. Nos reservamos todos los derechos.
The reproduction, transmission or use of this document or its contents is not permitted without express written authority. Offenders will be liable for damages. All rights, including rights created by patent grant or registration of a utility model or design, are reserved.

Documentation structure: Standard
Source file: KO050722.ODA

Rev.	Remarks	Date	Name	Norm	Date 22.07.2005	Drawn LANG	Appr.	Orig./Repl. 1/Repl. by

VSZ KOSICE

SIEMENS AG ISAOOLS

Substation control system 6MB
Indication field
Table

T = /BS 58
+
-S116
Page 58

Allocated diagram: Detailbild TRAFO 1

Type: Indication field for symbol/figure

Name	Section	Bay	Logical device	Lower limit
VENTILATOR 1	R220	T201	L2	PORUCHA VENTILATORA 1
VENTILATOR 1	R220	T201	L3	PORUCHA VENTILATORA 1
VENTILATOR 1	R220	TR.	Q	PORUCHA VENTILATORA 1
VENTILATOR 1	R220	T201	L1	PORUCHA VENTILATORA 1
VENTILATOR 2	R220	TR.	Q	PORUCHA VENTILATORA 2
VENTILATOR 2	R220	T201	L2	PORUCHA VENTILATORA 2
VENTILATOR 2	R220	T201	L1	PORUCHA VENTILATORA 2
VENTILATOR 2	R220	T201	L3	PORUCHA VENTILATORA 2
VENTILATOR 3	R220	T201	L2	PORUCHA VENTILATORA 3
VENTILATOR 3	R220	TR.	Q	PORUCHA VENTILATORA 3
VENTILATOR 3	R220	T201	L1	PORUCHA VENTILATORA 3
VENTILATOR 3	R220	T201	L3	PORUCHA VENTILATORA 3
VENTILATOR 4	R220	T201	L2	PORUCHA VENTILATORA 4
VENTILATOR 4	R220	T201	L3	PORUCHA VENTILATORA 4
VENTILATOR 4	R220	T201	L1	PORUCHA VENTILATORA 4
VENTILATOR 4	R220	TR.	Q	PORUCHA VENTILATORA 4
X	R220	DA01		Q-JEDNOTKA NEZARADENA DO L1
Y	R220	DA01		Q-JEDNOTKA NEZARADENA DO L2
Z	R220	DA01		Q-JEDNOTKA NEZARADENA DO L3

Proprietary data, company confidential. All rights reserved.
Confie a titre de secret d'entreprise. Tous droits reservs.
Comunicado como segredo empresarial. Reservados todos os direitos.
Confiado como secreto industrial. Nos reservamos todos los derechos.

The reproduction, transmission or use of this document or its is not permitted without express written authority.
Offenders will be liable for damages. All rights, including rights created by patent grant or registration of a utility model or design, are reserved

Documentation structur: Standard
Source file: KO050722.ODA

			Date	22.07.2005	VSZ KOSICE	SIEMENS AG ISA TOOLS	Substation control system 6MB Indication field
			Drawn	LANG			
			Appr.				
F	Remarks	Date	Name	Norm	Orig./Repl. 1/Repl. by		Table

T = /BS 59
+
-S116
Page 59

Allocated diagram Detailbild TRAFO 1

Name	Position Column	Position Line	Updating on change	Sign reversal	Digits after decimal point	Overall points	Left-justified	Leading zeros	Sign chained	+- suppression	Display attribute group	Section	Bay	Logical device	Lower limit
22kV EA03 MTP L2	36	22	Y	N	0	5	N	N	Y	Y	ABG 08 Meßwert	R110	EA03	MESSWERTE STROM	PRUD L2
22kV EA03 Spannung L1	36	21	Y	N	1	5	N	N	Y	Y	ABG 08 Meßwert	R110	EA03	MESSWERTE SPANNUNG	NAPATIE L1
Blindleistung	35	11	Y	N	0	4	N	N	Y	Y	ABG 08 Meßwert	R220	T201		JALOVY VYKON
COS FI	67	11	Y	N	2	6	N	N	Y	Y	ABG 08 Meßwert	R220	T201		COS FI
Frequenz DA01	35	6	Y	N	1	5	N	N	Y	Y	ABG 08 Meßwert	R220	T201		FREKVENCIA
Spannung L1-L2	35	12	Y	N	0	4	N	N	Y	Y	ABG 08 Meßwert	R220	T201	MESSW. SPANNUNG	NAPATIE L1-L2
Spannung L1-L2 DA01	35	5	Y	N	0	4	N	N	Y	Y	ABG 08 Meßwert	R220	T201	MESSW. SPANNUNG DA01	NAPATIE L1-L2
Strom L1	66	8	Y	N	0	4	N	N	Y	Y	ABG 08 Meßwert	R220	T201	MESSWERTE STROM	PRUD L1
Strom L2	66	9	Y	N	0	4	N	N	Y	Y	ABG 08 Meßwert	R220	T201	MESSWERTE STROM	PRUD L2
Strom L3	66	10	Y	N	0	4	N	N	Y	Y	ABG 08 Meßwert	R220	T201	MESSWERTE STROM	PRUD L3
TEMPERATUR Q	67	19	Y	N	0	3	N	N	Y	Y	ABG 08 Meßwert	R220	T202.		TEPLOTA TRANSF.JEDN. Q
TEMPERATUR X	13	19	Y	N	0	3	N	N	Y	Y	ABG 08 Meßwert	R220	T201		TEPLOTA TRANSF.JEDN.L1
TEMPERATUR Y	31	19	Y	N	0	3	N	N	Y	Y	ABG 08 Meßwert	R220	T201		TEPLOTA TRANSF.JEDN.L2
TEMPERATUR Z	49	19	Y	N	0	3	N	N	Y	Y	ABG 08 Meßwert	R220	T201		TEPLOTA TRANSF.JEDN.L3
WIRKLEISTUNG	35	10	Y	N	0	4	N	N	Y	Y	ABG 08 Meßwert	R220	T201		CINNY VYKON

Proprietary data, company confidential. All rights reserved.
Confie a titre de secret d'entreprise. Tous droits réservés.
Comunicado como segredo empresarial. Reservados todos os direitos.
Confiado como secreto industrial. Nos reservamos todos los derechos.

The reproduction, transmission or use of this document or its is not permitted without express written authority. Offenders will be liable for damages. All rights, including rights created by patent grant or registration of a utility model or design, are reserved.

Documentation structur: Standard
Source file: KO050722.ODA

Rev.	Remarks	Date	Name	Date	22.07.2005	VSZ KOSICE	SIEMENS AG ISAOOLS	Substation control system 6MB Analog value field	T = /BS 60
				Drawn	LANG				+
				Appr.					-S116 Page 60
				Norm		Orig./Repl. 1/Repl. by		Table	

Detailbild TRAFO 2

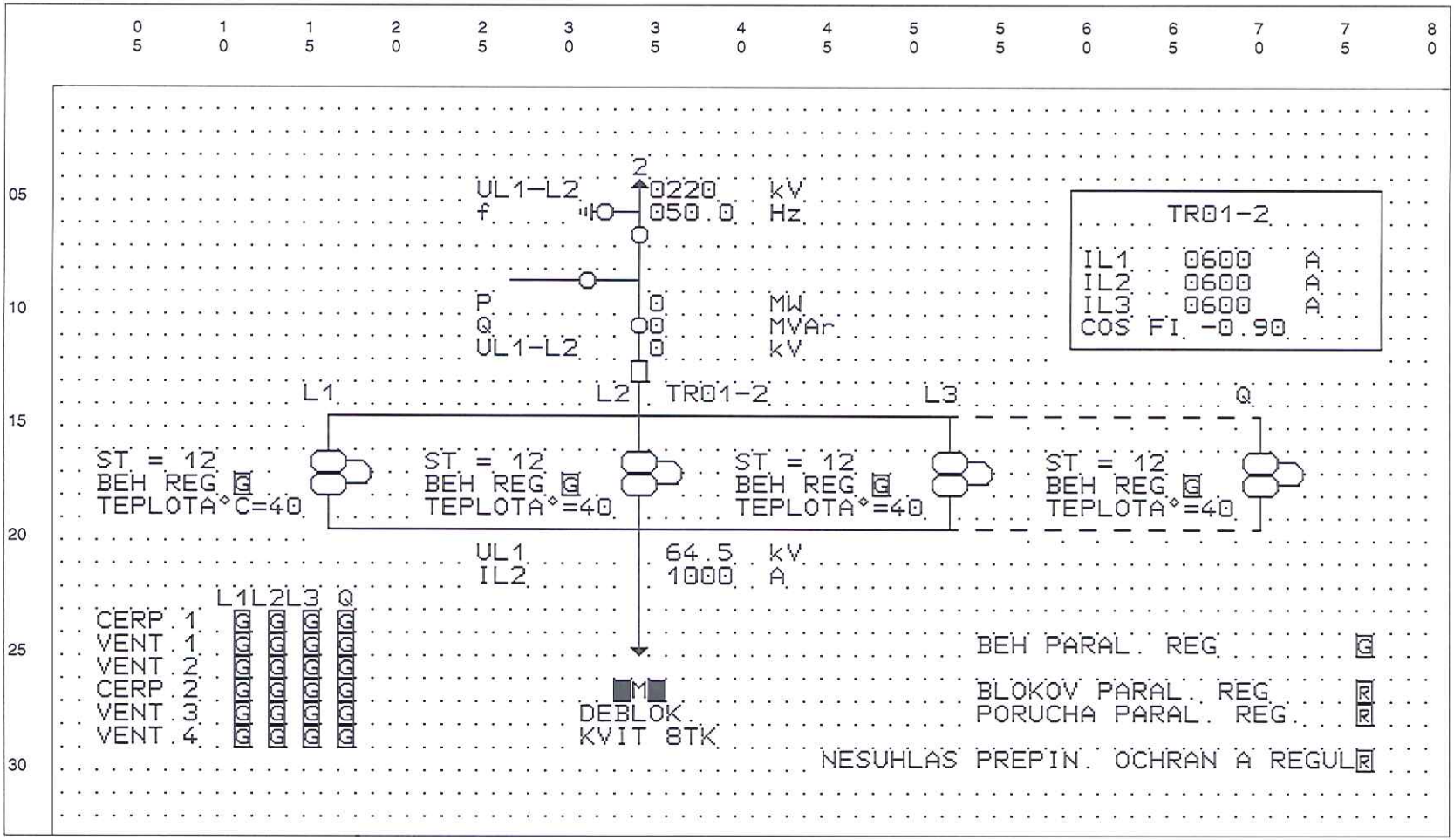

Proprietary data, company confidential. All rights reserved.
Confie a titre de secret d'entreprise. Tous droits réservés.
Comunicado como segredo empresarial. Reservados todos os direitos.
Confiado como secreto industrial. Nos reservamos todos los derechos.

The reproduction, transmission or use of this document or its is not permitted without express written authority. Offenders will be liable for damages. All rights, including rights created by patent grant or registration of a utility model or design, are reserved.

Documentation structur: Standard
Source file: KO050722.ODA

			Date	22.07.2005	VSZ KOSICE	SIEMENS AG ISAIOOLS	Substation control system 6MB Detailed diagram
			Drawn	LANG			
			Appr.				
F	Remarks	Date	Name	Norm	Orig./Repl. 1/Repl. by		Table

T = /BS 61
+
-S116
Page 61

Allocated diagram Detailbild TRAFO 2

Type: Selection field with information specification

Name	Position Column	Position Line	Position recognition	Display as	Display attribute group	Allocation of:	Section	Bay	Logical device	Lower limit	Position recognition
TRAFOSTEUERUNG	50	17	AFTR - Anwahlfeld Trafo	SY	ABG 00 Anwahl Trafo	INF	R220	T202	L3 TRAFO	ODBOCKA VO FAZE	
TRAFOSTEUERUNG	14	17	AFTR - Anwahlfeld Trafo	SY	ABG 00 Anwahl Trafo	INF	R220	T202	L1 TRAFO	ODBOCKA VO FAZE	
TRAFOSTEUERUNG	68	17	AFTR - Anwahlfeld Trafo	SY	ABG 00 Anwahl Trafo	INF	R220	T202	Q TRAFO	ODBOCKA VO FAZE	
TRAFOSTEUERUNG	32	17	AFTR - Anwahlfeld Trafo	SY	ABG 00 Anwahl Trafo	INF	R220	T202	L2 TRAFO	ODBOCKA VO FAZE	
TRAFOSTEUERUNG	36	14	AFTR - alle 3 Trafos gemeinsam	SY	ABG 00 Anwahl Trafo 3Polig	INF	R220	T202		PARALELNA REGULACIA	

Proprietary data, company confidential. All rights reserved.
Confie a titre de secret d'entreprise. Tous droits réservés.
Comunicado como segredo empresarial. Reservados todos os direitos.
Confiado como secreto industrial. Nos reservamos todos los derechos.

The reproduction, transmission or use of this document or its is not permitted without express written authority.
Offenders will be liable for damages. All rights, including rights created by patent grant or registration of a utility model or design, are reserved.

Documentation structur: Standard
Source file: KO050722.ODA

Rev.	Remarks	Date	Name	Date	22.07.2005	VSZ KOSICE	SIEMENS AG ISA TOOLS	Substation control system 6MB Selection field	T = /BS 62
				Drawn	LANG				+
				Appr.					-S116 Page 62
				Norm		Orig./Repl. 1/Repl. by		Table	

Allocated diagram: Detailbild TRAFO 2

Type: Indication field for symbol/figure

Name	Position Column	Position Line	Position recognition	Acknowledgeable	Display as	Display attribute group	Allocation of:	
BEH PARELELNEJ REGULACIE	54	25		Y	SY	ABG 23 Kom/Geh Quitt	INF	
BLOKOV PARAL REG	54	27		Y	SY	ABG 23 Kom/Geh Quitt	INF	
CERPALDO 1	13	24		Y	SY	ABG 23 Kom/Geh Quitt	INF	
CERPALDO 1	11	24		Y	SY	ABG 23 Kom/Geh Quitt	INF	
CERPALDO 1	17	24		Y	SY	ABG 23 Kom/Geh Quitt	INF	
CERPALDO 1	15	24		Y	SY	ABG 23 Kom/Geh Quitt	INF	
CERPALDO 2	13	27		Y	SY	ABG 23 Kom/Geh Quitt	INF	
CERPALDO 2	11	27		Y	SY	ABG 23 Kom/Geh Quitt	INF	
CERPALDO 2	17	27		Y	SY	ABG 23 Kom/Geh Quitt	INF	
CERPALDO 2	15	27		Y	SY	ABG 23 Kom/Geh Quitt	INF	
Deblok	31	28		N	SY	ABG 22 Kom/Geh/Schwarz/Cyan	INF	
Deblokacia blokovania	33	27	BLOK - positionierbare SF6 Block.	Y	SY	ABG 21 8TK	INF	
Feldsperre	32	5	POAU - postionierbare Feldsperre	N	FIG	ABG 14 Feldsperre rot 220KV	INF	
KVIT 8TK	31	29		Y	SY	ABG 23 Kom/Geh Quitt	INF	
Laufkontakt	22	18		N	SY	ABG 23 Kom/Geh Quitt	INF	
Laufkontakt	3	18		N	SY	ABG 23 Kom/Geh Quitt	INF	
Laufkontakt	58	18		N	SY	ABG 23 Kom/Geh Quitt	INF	
Laufkontakt	40	18		N	SY	ABG 23 Kom/Geh Quitt	INF	
Leistungsschalter QM	34	13	POSC - positionierbare Schalter	Y	SY	ABG 02 Leistungsschalter 220kV	INF	
NESUHLAS PREPIN OCHRAN A REG	45	30		Y	SY	ABG 23 Kom/Geh Quitt	INF	
Q	69	14		N	SY	ABG 26 Kom/Geh/Schwarz/Rot/Weiß "Q"	INF	
Quitt SF6	35	27	KVIT - postionierbare SF6 Quittierung	Y	SY	ABG 21 8TK	INF	
S5 M	34	27		N	SY	ABG 24 Kom/Geh/Weiß/Schwarz	INF	
STUFENGLEICHHEIT	54	28		N	SY	ABG 18 Stufengleichheit	INF	
TRAFO	27	17		Y	SY	ABG 11 Stufenstellung	INF	
TRAFO	63	17		Y	SY	ABG 11 Stufenstellung	INF	
TRAFO	45	17		Y	SY	ABG 11 Stufenstellung	INF	
TRAFO	8	17		Y	SY	ABG 11 Stufenstellung	INF	
Trenner Q1	34	11	POSC - positionierbare Schalter	Y	SY	ABG 02 Trenner 220kV Kringel oben/unten	INF	
Trenner Q6	34	7	POSC - positionierbare Schalter	Y	SY	ABG 02 Trenner 220kV Kringel oben/unten	INF	
Trenner Q7	31	9	POSC - positionierbare Schalter	Y	SY	ABG 02 Trenner 220kV	INF	
Trenner QE6	32	6	POSC - positionierbare Schalter	Y	SY	ABG 02 Trenner 220kV	INF	

Proprietary data, company confidential. All rights reserved
Confia a tire de secret d'entreprise. Tous droits reservs.
Comunicado como esgredo empresarial. Reservados todos os direitos.
Confiado como secreto industrial. Nos reservamos todos los derechos.
The reproduction, transmission or use of this document or its contents is not permitted without expres written authority. Offenders will be liable for damages. All rights, including rights created by patent grant or registration of a utility model or design, are reserved

Documentation structur: Standard
Source file: KO050722.ODA

Date	22.07.2005	VSZ KOSICE	SIEMENS AG ISATOOLS
Drawn	LANG		
Appr.			
Norm		Orig./Repl. 1/Repl. by	

Substation control system 6MB
Indication field
Table

T = /BS 63
+
-S116
Page 63

Remarks | Date | Name

Allocated diagram: Detailbild TRAFO 2

Type: Indication field for symbol/figure

Name	Section	Bay	Logical device		Lower limit
BEH PARELELNEJ REGULACIE	R220	T202			BEH PARELELNEJ REGULACIE
BLOKOV PARAL REG	R220	T202			BLOKOV. PARALEL. REGULACIE
CERPALDO 1	R220	T202	L2		PORUCHA CERPADLA 1
CERPALDO 1	R220	T202	L1		PORUCHA CERPADLA 1
CERPALDO 1	R220	T202	Q		PORUCHA CERPADLA 1
CERPALDO 1	R220	T202	L3		PORUCHA CERPADLA 1
CERPALDO 2	R220	T202	L2		PORUCHA CERPADLA 2
CERPALDO 2	R220	T202	L1		PORUCHA CERPADLA 2
CERPALDO 2	R220	T202	Q		PORUCHA CERPADLA 2
CERPALDO 2	R220	T202	L3		PORUCHA CERPADLA 2
Deblok	R220	DA02			PREVADZKA S1
Deblokacia blokovania	R220	DA02			DEBLOKACIA BLOKOVANIA
Feldsperre	R220	DA02			ZABLOKOVANI POLE
KVIT 8TK	R220	DA02			KVIT 8TK
Laufkontakt	R220	T202	L2		BEH REGULACIE VO FAZE L2
Laufkontakt	R220	T202	L1		BEH REGULACIE VO FAZE L1
Laufkontakt	R220	T202	Q		BEH REGULACIE V REZERV.JEDN.
Laufkontakt	R220	T202	L3		BEH REGULACIE VO FAZE L3
Leistungsschalter QM	R220	DA02		VYPINAC Q0	SCHALTZUSTAND
NESUHLAS PREPIN OCHRAN A REG	R220	DA02			NESUHLAS PREPIN.OCHR.A REGUL
Q	R220	DA02			Q-JEDNOTKA NEZARADENA DO L1
Quitt SF6	R220	DA02			KVITOVANIE
S5 M	R220	DA02			S5 POLOHA VYPN./MIESTNE
STUFENGLEICHHEIT	R220	T202			PORUCHA PARAL.REG.
TRAFO	R220	T202	L2	TRAFO	ODBOCKA ST.C.
TRAFO	R220	T202	Q	TRAFO	ODBOCKA ST.C.
TRAFO	R220	T202	L3	TRAFO	ODBOCKA ST.C.
TRAFO	R220	T202	L1	TRAFO	ODBOCKA ST.C.
Trenner Q1	R220	DA02		ODPOJOVAC Q1	SCHALTZUSTAND
Trenner Q6	R220	DA02		ODPOJOVAC Q6	SCHALTZUSTAND
Trenner Q7	R220	DA02		ODPOJOVAC Q8	SCHALTZUSTAND
Trenner QE6	R220	DA02		ODPOJOVAC QE6	SCHALTZUSTAND

Proprietary data, company confidential. All rights reserved
Confia a tlea de secret de empresa. Tous droits réservés
Comunicado como segredo comercial. Reservados todos os direitos
Confidencial como secreto industrial. Nos reservamos todos los derechos
The reproduction, transmission or use of this document or its contents is not permitted without express written authority.
Offenders will be liable for damages. All rights, including rights created by patent grant or registration of a utility model or design, are reserved

Documentation structur: Standard
Source file: KO050722.ODA

Rev.	Remarks	Date	Name	Norm	Date 22.07.2005	Drawn LANG	Appr.	Orig./Repl. 1/Repl. by

VSZ KOSICE

SIEMENS AG ISAOOLS

Substation control system 6MB
Indication field
Table

T = /BS 64
+
-S116
Page 64

Allocated diagram Detailbild TRAFO 2

Type: Indication field for symbol/figure

Name	Position Column	Position Line	Position recognition	Acknowledgeable	Display as	Display attribute group	Allocation of:
VENTILATOR 1	13	25		Y	SY	ABG 23 Kom/Geh Quitt	INF
VENTILATOR 1	17	25		Y	SY	ABG 23 Kom/Geh Quitt	INF
VENTILATOR 1	15	25		Y	SY	ABG 23 Kom/Geh Quitt	INF
VENTILATOR 1	11	25		Y	SY	ABG 23 Kom/Geh Quitt	INF
VENTILATOR 2	13	26		Y	SY	ABG 23 Kom/Geh Quitt	INF
VENTILATOR 2	15	26		Y	SY	ABG 23 Kom/Geh Quitt	INF
VENTILATOR 2	17	26		Y	SY	ABG 23 Kom/Geh Quitt	INF
VENTILATOR 2	11	26		Y	SY	ABG 23 Kom/Geh Quitt	INF
VENTILATOR 3	13	28		Y	SY	ABG 23 Kom/Geh Quitt	INF
VENTILATOR 3	15	28		Y	SY	ABG 23 Kom/Geh Quitt	INF
VENTILATOR 3	17	28		Y	SY	ABG 23 Kom/Geh Quitt	INF
VENTILATOR 3	11	28		Y	SY	ABG 23 Kom/Geh Quitt	INF
VENTILATOR 4	15	29		Y	SY	ABG 23 Kom/Geh Quitt	INF
VENTILATOR 4	17	29		Y	SY	ABG 23 Kom/Geh Quitt	INF
VENTILATOR 4	11	29		Y	SY	ABG 23 Kom/Geh Quitt	INF
VENTILATOR 4	13	29		Y	SY	ABG 23 Kom/Geh Quitt	INF
X	15	14		N	SY	ABG 25 Kom/Geh/Schwarz/Rot/Weiß	INF
Y	32	14		N	SY	ABG 25 Kom/Geh/Schwarz/Rot/Weiß	INF
Z	51	14		N	SY	ABG 25 Kom/Geh/Schwarz/Rot/Weiß	INF

Proprietary data, company confidential. All rights reserved.
Confia a titre de secret d'entreprise. Tous droits réservés.
Comunicado como segredo empresarial. Reservados todos os direitos.
Confiado como secreto industrial. Nos reservamos todos los derechos.

The reproduction, transmission or use of this document or its is not permitted without express written authority.
Offenders will be liable for damages. All rights, including rights created by patent grant or registration of a utility model or design, are reserved.

Documentation structur: Standard
Source file: KO050722.ODA

			Date	22.07.2005	VSZ KOSICE	SIEMENS AG ISAIOOLS	Substation control system 6MB Indication field
			Drawn	LANG			
			Appr.				
R	Remarks	Date	Name	Norm	Orig./Repl. 1/Repl. by		Table

T = /BS 65
+
-S116
Page

Allocated diagram: Detailbild TRAFO 2

Type: Indication field for symbol/figure

Name	Section	Bay	Logical device	Lower limit
VENTILATOR 1	R220	T202	L2	PORUCHA VENTILATORA 1
VENTILATOR 1	R220	T202	Q	PORUCHA VENTILATORA 1
VENTILATOR 1	R220	T202	L3	PORUCHA VENTILATORA 1
VENTILATOR 1	R220	T202	L1	PORUCHA VENTILATORA 1
VENTILATOR 2	R220	T202	L2	PORUCHA VENTILATORA 2
VENTILATOR 2	R220	T202	L3	PORUCHA VENTILATORA 2
VENTILATOR 2	R220	T202	Q	PORUCHA VENTILATORA 2
VENTILATOR 2	R220	T202	L1	PORUCHA VENTILATORA 2
VENTILATOR 3	R220	T202	L2	PORUCHA VENTILATORA 3
VENTILATOR 3	R220	T202	L3	PORUCHA VENTILATORA 3
VENTILATOR 3	R220	T202	Q	PORUCHA VENTILATORA 3
VENTILATOR 3	R220	T202	L1	PORUCHA VENTILATORA 3
VENTILATOR 4	R220	T202	L3	PORUCHA VENTILATORA 4
VENTILATOR 4	R220	T202	Q	PORUCHA VENTILATORA 4
VENTILATOR 4	R220	T202	L1	PORUCHA VENTILATORA 4
VENTILATOR 4	R220	T202	L2	PORUCHA VENTILATORA 4
X	R220	DA02		Q-JEDNOTKA NEZARADENA DO L1
Y	R220	DA02		Q-JEDNOTKA NEZARADENA DO L2
Z	R220	DA02		Q-JEDNOTKA NEZARADENA DO L3

Proprietary data, company confidential. All rights reserved.
Confie a titre de secret d'entreprise. Tous droits réservés.
Comunicado como segredo empresarial. Reservados todos os direitos.
Confiado como secreto industrial. Nos reservamos todos los derechos.
The reproduction, transmission or use of this document or its is not permitted without express written authority.
Offenders will be liable for damages. All rights, including rights created by patent grant or registration of a utility model or design, are reserved

Documentation structur: Standard
Source file: KO050722.ODA

Rev.	Remarks	Date	Name	Date	22.07.2005	VSZ KOSICE	SIEMENS AG ISAOOLS	Substation control system 6MB Indication field	T = /BS 66
				Drawn	LANG				+
				Appr.					
				Norm		Orig./Repl. 1/Repl. by		Table	-S116 Page 66

Allocated diagram Detailbild TRAFO 2

Name	Position Column	Position Line	Updating on change	Sign reversal	Digits after decimal point	Overall points	Left-justified	Leading zeros	Sign chained	+- suppression	Display attribute group	Section	Bay	Logical device	Lower limit
Blindleistung	35	11	Y	N	0	4	N	N	Y	Y	ABG 08 Meßwert	R220	T202		JALOVY VYKON
COS FI	67	11	Y	N	2	6	N	N	Y	Y	ABG 08 Meßwert	R220	T202		COS FI
E07 MTP L2	36	22	Y	N	1	7	N	N	Y	Y	ABG 08 Meßwert	R110	EA07	MESSWERTE STROM	PRUD L2
E07 Spannung L1	36	21	Y	N	1	6	N	N	Y	Y	ABG 08 Meßwert	R110	EA07	MESSWERTE SPANNUNG	NAPATIE L1
Frequenz DA01	35	6	Y	N	1	5	N	N	Y	Y	ABG 08 Meßwert	R220	T202		FREKVENCIA
Spannung L1-L2	35	12	Y	N	0	4	N	N	Y	Y	ABG 08 Meßwert	R220	T202	MESSW. SPANNUNG	NAPATIE L1-L2
Spannung L1-L2 DA01	35	5	Y	N	0	4	N	N	Y	Y	ABG 08 Meßwert	R220	T202	MESSW. SPANNUNG DA02	NAPATIE L1-L2
Strom L1	66	8	Y	N	0	4	N	N	Y	Y	ABG 08 Meßwert	R220	T202	MESSWERTE STROM	PRUD L1
Strom L2	66	9	Y	N	0	4	N	N	Y	Y	ABG 08 Meßwert	R220	T202	MESSWERTE STROM	PRUD L2
Strom L3	66	10	Y	N	0	4	N	N	Y	Y	ABG 08 Meßwert	R220	T202	MESSWERTE STROM	PRUD L3
TEMPERATUR Q	67	19	Y	N	0	3	N	N	Y	Y	ABG 08 Meßwert	R220	T202.		TEPLOTA TRANSF.JEDN. Q
TEMPERATUR X	13	19	Y	N	0	3	N	N	Y	Y	ABG 08 Meßwert	R220	T202.		TEPLOTA TRANSF.JEDN.L1
TEMPERATUR Y	31	19	Y	N	0	3	N	N	Y	Y	ABG 08 Meßwert	R220	T202.		TEPLOTA TRANSF.JEDN.L2
TEMPERATUR Z	49	19	Y	N	0	3	N	N	Y	Y	ABG 08 Meßwert	R220	T202.		TEPLOTA TRANSF.JEDN.L3
WIRKLEISTUNG	35	10	Y	N	0	4	N	N	Y	Y	ABG 08 Meßwert	R220	T202		CINNY VYKON

Proprietary data, company confidential. All rights reserved.
Confia a titre de secret d'entreprise. Tous droits réservés.
Comunicado como segredo empresarial. Reservados todos os direitos.
Confiado como secreto industrial. Nos reservamos todos los derechos.

The reproduction, transmission or use of this document or its is not permitted without express written authority.
Offenders will be liable for damages. All rights, including rights created by patent grant or registration of a utility model or design, are reserved.

Documentation structur: Standard
Source file: KO050722.ODA

			Date	22.07.2005	VSZ KOSICE	SIEMENS AG ISAOOLS	Substation control system 6MB Analog value field
			Drawn	LANG			
			Appr.				
Remarks	Date	Name	Norm		Orig./Repl. 1/Repl. by		Table

T = /BS 67
+
-S116
Page

Übersichtsbild 220KV Kosice

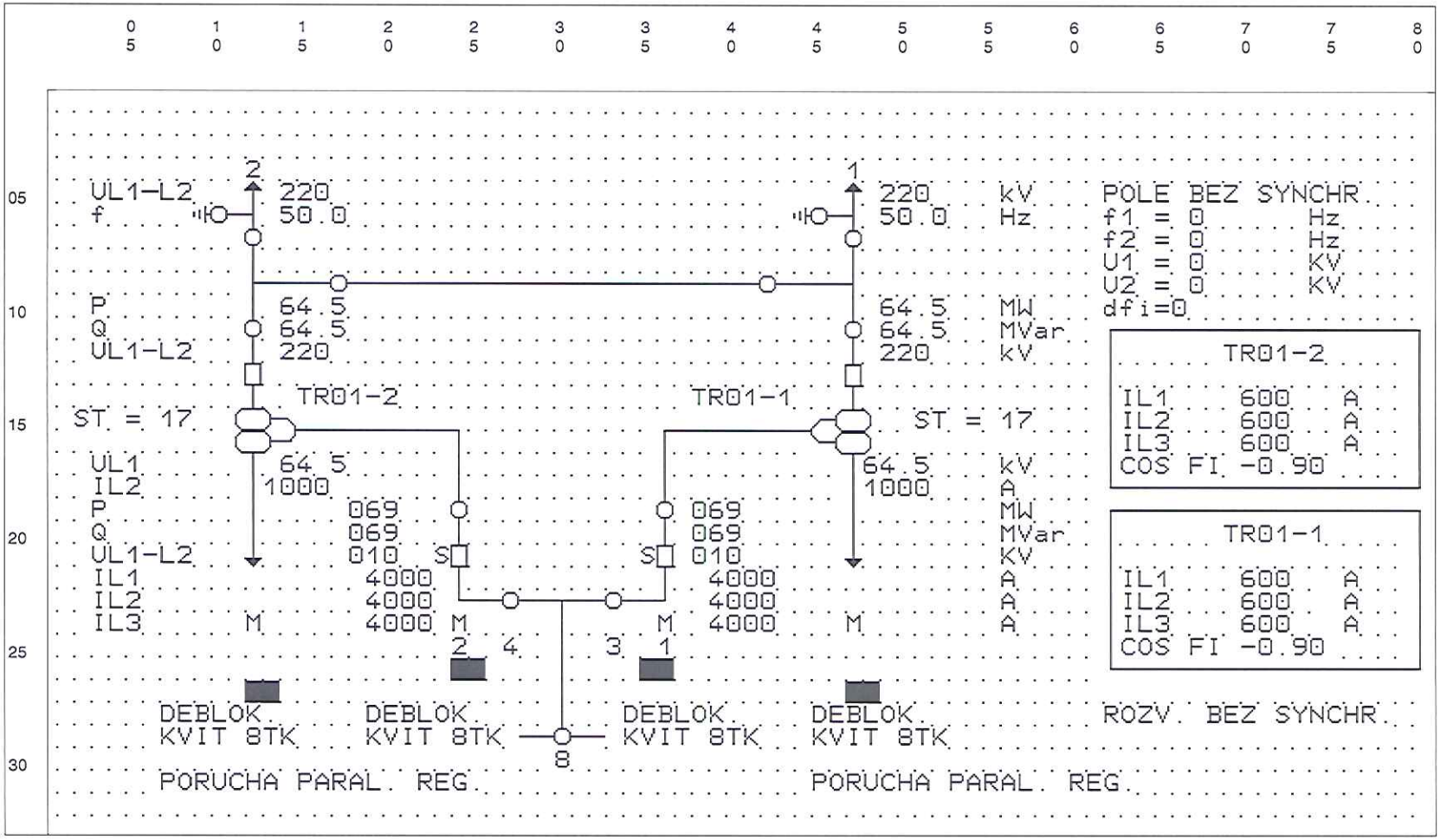

The reproduction, transmission or use of this document or its is not permitted without express written authority. Offenders will be liable for damages. All rights, including rights created by patent grant or registration of a utility model or design, are reserved. Proprietary data, company confidential. All rights reserved. Confie a titre de secret d'entreprise. Tous droits r.servs. Comunicado como segredo empresarial. Reservados todos os direitos. Confiado como secreto industrial. Nos reservamos todos los derechos.

Documentation structur: Standard
Source file: KO050722.ODA

Rev.	Remarks	Date	Name	Date	22.07.2005	VSZ KOSICE	SIEMENS AG ISAIOOLS	Substation control system 6MB Overview diagram	T = /BS 68
				Drawn	LANG				+
				Appr.					-S116 Page 68
				Norm		Orig./Repl. 1/Repl. by		Table	

Allocated diagram Übersichtsbild 220KV Kosice

Type: Selection field with information specification

Name	Position Column	Position Line	Position recognition	Display as	Display attribute group	Allocation of:	Section	Bay	Logical device	Lower limit	Position recognition
TRAFOSTEUERUNG	38	14	AFTR - alle 3 Trafos gemeinsam	SY	ABG 00 Anwahl Trafo 3Polig	INF	R220	T201		PARALELNA REGULACIA	
TRAFOSTEUERUNG	15	14	AFTR - alle 3 Trafos gemeinsam	SY	ABG 00 Anwahl Trafo 3Polig	INF	R220	T202		PARALELNA REGULACIA	

Proprietary data, company confidential. All rights reserved.
Confie a titre de secret d'entreprise. Tous droits reservés.
Comunicado como segredo empresarial. Reservados todos os direitos.
Confiado como secreto industrial. Nos reservamos todos los derechos.

The reproduction, transmission or use of this document or its is not permitted without express written authority.
Offenders will be liable for damages. All rights, including rights created by patent grant or registration of a utility model or design, are reserved.

Documentation structur: Standard
Source file: KO050722.ODA

			Date	22.07.2005	VSZ KOSICE	SIEMENS AG ISA TOOLS	Substation control system 6MB Selection field	T = /BS 69
			Drawn	LANG				+
			Appr.					-S116 Page 69
F	Remarks	Date	Name Norm		Orig./Repl. 1/Repl. by		Table	

Allocated diagram: Übersichtsbild 220KV Kosice

Type: Indication field for symbol/figure

Name	Position Column	Position Line	Position recognition	Acknowledgeable	Display as	Display attribute group	Allocation of:
Deblok	34	28		N	SY	ABG 22 Kom/Geh/Schwarz/Cyan	INF
Deblok	19	28		N	SY	ABG 22 Kom/Geh/Schwarz/Cyan	INF
Deblok	7	28		N	SY	ABG 22 Kom/Geh/Schwarz/Cyan	INF
Deblok	45	28		N	SY	ABG 22 Kom/Geh/Schwarz/Cyan	INF
Deblokacia blokovania	12	27	BLOK - positionierbare SF6 Block.	Y	SY	ABG 21 8TK	INF
Deblokacia blokovania	24	26	BLOK - positionierbare SF6 Block.	Y	SY	ABG 21 8TK	INF
Deblokacia blokovania	47	27	BLOK - positionierbare SF6 Block.	Y	SY	ABG 21 8TK	INF
Deblokacia blokovania	35	26	BLOK - positionierbare SF6 Block.	Y	SY	ABG 21 8TK	INF
Feldsperre	11	5	POAU - postionierbare Feldsperre	N	FIG	ABG 14 Feldsperre rot 220KV	INF
Feldsperre	43	5	POAU - postionierbare Feldsperre	N	FIG	ABG 14 Feldsperre rot 220KV	INF
Kobka	30	29		Y	SY	ABG 02 Trenner 10kV Kringel oben	INF
KVIT 8TK	34	29		Y	SY	ABG 23 Kom/Geh Quitt	INF
KVIT 8TK	7	29		Y	SY	ABG 23 Kom/Geh Quitt	INF
KVIT 8TK	45	29		Y	SY	ABG 23 Kom/Geh Quitt	INF
KVIT 8TK	19	29		Y	SY	ABG 23 Kom/Geh Quitt	INF
Leistungsschalter	36	21	POINTERN - positionierbare LS/Intern	Y	SY	ABG 02 Leistungsschalter 10kV	INF
Leistungsschalter	24	21	POINTERN - positionierbare LS/Intern	Y	SY	ABG 02 Leistungsschalter 10kV	INF
Leistungsschalter QM	47	13	POSC - positionierbare Schalter	Y	SY	ABG 02 Leistungsschalter 220kV	INF
Leistungsschalter QM	12	13	POSC - positionierbare Schalter	Y	SY	ABG 02 Leistungsschalter 220kV	INF
POLE BEZ SYNCHR.	62	5		N	SY	ABG 22 Kom/Geh/Schwarz/Cyan	INF
Quitt SF6	36	26	KVIT - postionierbare SF6 Quittierung	Y	SY	ABG 21 8TK	INF
Quitt SF6	25	26	KVIT - postionierbare SF6 Quittierung	Y	SY	ABG 21 8TK	INF
Quitt SF6	13	27	KVIT - postionierbare SF6 Quittierung	Y	SY	ABG 21 8TK	INF
Quitt SF6	48	27	KVIT - postionierbare SF6 Quittierung	Y	SY	ABG 21 8TK	INF
ROZV. BEZ SYNCHR.	62	28		N	SY	ABG 22 Kom/Geh/Schwarz/Cyan	INF
S5 M	12	24		N	SY	ABG 24 Kom/Geh/Weiß/Schwarz	INF
S5 M	24	24		N	SY	ABG 24 Kom/Geh/Weiß/Schwarz	INF
S5 M	47	24		N	SY	ABG 24 Kom/Geh/Weiß/Schwarz	INF
S5 M	36	24		N	SY	ABG 24 Kom/Geh/Weiß/Schwarz	INF
STUFENGLEICHHEIT	7	31		N	SY	ABG 18 Stufengleichheit	INF
STUFENGLEICHHEIT	45	31		N	SY	ABG 18 Stufengleichheit	INF
TRAFO	7	15		Y	SY	ABG 11 Stufenstellung	INF

Proprietary data, company confidential. All rights reserved
Confie a tre de secret d'entreprise. Tous droits reservis
Comunicado como segredo empresarial. Reservados todos os direitos.
Confiado como secreto industrial. Nos reservamos todos los derechos.
The reproduction, transmission or use of this document or its contents is not permitted without express written authority. Offenders will be liable for damages. All rights, including rights created by patent grant or registration of a utility model or design, are reserved.

Documentation structur: Standard
Source file: KO050722.ODA

Rev.	Remarks	Date	Name	Date	22.07.2005
				Drawn	LANG
				Appr.	
				Norm	

VSZ KOSICE

Orig./Repl. 1/Repl. by

SIEMENS AG
ISAIOOLS

Substation control system 6MB
Indication field

Table

T = /BS 70
+

-S116

Page 70

Allocated diagram: Übersichtsbild 220KV Kosice

Type: Indication field for symbol/figure

Name	Section	Bay	Logical device	Lower limit
Deblok	T201	TERC		PREVADZKA S1
Deblok	T202	TERC		PREVADZKA S1
Deblok	R220	DA02		PREVADZKA S1
Deblok	R220	DA01		PREVADZKA S1
Deblokacia blokovania	R220	DA02		DEBLOKACIA BLOKOVANIA
Deblokacia blokovania	T202	TERC		DEBLOKACIA BLOKOVANIA
Deblokacia blokovania	R220	DA01		DEBLOKACIA BLOKOVANIA
Deblokacia blokovania	T201	TERC		DEBLOKACIA BLOKOVANIA
Feldsperre	R220	DA02		ZABLOKOVANI POLE
Feldsperre	R220	DA01		ZABLOKOVANI POLE
Kobka	T60	KA08	KOBKA	SCHALTZUSTAND
KVIT 8TK	T201	TERC		KVIT 8TK
KVIT 8TK	R220	DA02		KVIT 8TK
KVIT 8TK	R220	DA01		KVIT 8TK
KVIT 8TK	T202	TERC		KVIT 8TK
Leistungsschalter	T201	TERC	VYPINAC Q0	SCHALTZUSTAND
Leistungsschalter	T202	TERC	VYPINAC Q0	SCHALTZUSTAND
Leistungsschalter QM	R220	DA01	VYPINAC Q0	SCHALTZUSTAND
Leistungsschalter QM	R220	DA02	VYPINAC Q0	SCHALTZUSTAND
POLE BEZ SYNCHR.	R110	SPOL		VYPNUTIE SYNCHRONIZACIE
Quitt SF6	T201	TERC		KVITOVANIE
Quitt SF6	T202	TERC		KVITOVANIE
Quitt SF6	R220	DA02		KVITOVANIE
Quitt SF6	R220	DA01		KVITOVANIE
ROZV. BEZ SYNCHR.	R110	EA01		VYPNUTIE SYNCHRONIZACIE
S5 M	R220	DA02		S5 POLOHA VYPN./MIESTNE
S5 M	T202	TERC		S5 POLOHA VYPN./MIESTNE
S5 M	R220	DA01		S5 POLOHA VYPN./MIESTNE
S5 M	T201	TERC		S5 POLOHA VYPN./MIESTNE
STUFENGLEICHHEIT	R220	T202		PORUCHA PARAL.REG.
STUFENGLEICHHEIT	R220	T201		PORUCHA PARAL.REG.
TRAFO	R220	T202	L2 TRAFO	ODBOCKA ST.C.

Proprietary data, company confidential. All rights reserved.
Confie a titre de secret d'entreprise. Tous droits réservés.
Comunicado como segredo empresarial. Reservados todos os direitos.
Confiado como secreto industrial. Nos reservamos todos los derechos.

The reproduction, transmission or use of this document or its is not permitted without express written authority.
Offenders will be liable for damages. All rights, including rights created by patent grant or registration of a utility model or design, are reserved.

Documentation structur: Standard
Source file: KO050722.ODA

Remarks	Date	Name	Date	22.07.2005	VSZ KOSICE	SIEMENS AG ISAOOLS	Substation control system 6MB Indication field	T = /BS 71
			Drawn	LANG				+
			Appr.					
			Norm		Orig./Repl. 1/Repl. by		Table	-S116 Page 71

Allocated diagram: Übersichtsbild 220KV Kosice

Type: Indication field for symbol/figure

Name	Position Column	Position Line	Position recognition	Acknowledgeable	Display as	Display attribute group	Allocation of:
TRAFO	56	15		Y	SY	ABG 11 Stufenstellung	INF
Trenner Q1	12	11	POSC - positionierbare Schalter	Y	SY	ABG 02 Trenner 220kV Kringel oben/unten	INF
Trenner Q1	27	23	POSC - positionierbare Schalter	Y	SY	ABG 02 Trenner 10kV	INF
Trenner Q1	33	23	POSC - positionierbare Schalter	Y	SY	ABG 02 Trenner 10kV	INF
Trenner Q1	47	11	POSC - positionierbare Schalter	Y	SY	ABG 02 Trenner 220kV Kringel oben/unten	INF
Trenner Q6	12	7	POSC - positionierbare Schalter	Y	SY	ABG 02 Trenner 220kV Kringel oben/unten	INF
Trenner Q6	47	7	POSC - positionierbare Schalter	Y	SY	ABG 02 Trenner 220kV Kringel oben/unten	INF
Trenner Q7	17	9	POSC - positionierbare Schalter	Y	SY	ABG 02 Trenner 220kV	INF
Trenner Q7	42	9	POSC - positionierbare Schalter	Y	SY	ABG 02 Trenner 220kV	INF
Trenner Q9	36	19	POSC - positionierbare Schalter	Y	SY	ABG 02 Trenner 10kV Kringel oben/unten	INF
Trenner Q9	24	19	POSC - positionierbare Schalter	Y	SY	ABG 02 Trenner 10kV Kringel oben/unten	INF
Trenner QE6	45	6	POSC - positionierbare Schalter	Y	SY	ABG 02 Trenner 220kV	INF
Trenner QE6	10	6	POSC - positionierbare Schalter	Y	SY	ABG 02 Trenner 220kV	INF

Proprietary data, company confidential. All rights reserved.
Confie a titre de secret d'entreprise. Tous droits réservés.
Comunicado como segredo empresarial. Reservados todos os direitos.
Confiado como secreto industrial. Nos reservamos todos los derechos.
The reproduction, transmission or use of this document or its is not permitted without expres written authority.
Offenders will be liable for damages. All rights, including rights created by patent grant or registration of a utility model or design, are reserved.

Documentation structur: Standard
Source file: KO050722.ODA

Rev.	Remarks	Date	Name	Date	22.07.2005	VSZ KOSICE	SIEMENS AG SAOOLS	Substation control system 6MB Indication field	T = /BS 72
				Drawn	LANG				+
				Appr.					
				Norm		Orig./Repl. 1/Repl. by		Table	-S116 Page 72

Allocated diagram: Übersichtsbild 220KV Kosice

Type: Indication field for symbol/figure

Name	Section	Bay		Logical device	Lower limit
TRAFO	R220	T201	L2	TRAFO	ODBOCKA ST.C.
Trenner Q1	R220	DA02		ODPOJOVAC Q1	SCHALTZUSTAND
Trenner Q1	T202	TERC		ODPOJOVAC Q1	SCHALTZUSTAND
Trenner Q1	T201	TERC		ODPOJOVAC Q1	SCHALTZUSTAND
Trenner Q1	R220	DA01		ODPOJOVAC Q1	SCHALTZUSTAND
Trenner Q6	R220	DA02		ODPOJOVAC Q6	SCHALTZUSTAND
Trenner Q6	R220	DA01		ODPOJOVAC Q6	SCHALTZUSTAND
Trenner Q7	R220	DA02		ODPOJOVAC Q8	SCHALTZUSTAND
Trenner Q7	R220	DA01		ODPOJOVAC Q7	SCHALTZUSTAND
Trenner Q9	T201	TERC		ODPOJOVAC Q9	SCHALTZUSTAND
Trenner Q9	T202	TERC		ODPOJOVAC Q9	SCHALTZUSTAND
Trenner QE6	R220	DA01		ODPOJOVAC QE6	SCHALTZUSTAND
Trenner QE6	R220	DA02		ODPOJOVAC QE6	SCHALTZUSTAND

Proprietary data, company confidential. All rights reserved.
Confie a titre de secret d'entreprise. Tous droits r,serv,s.
Comunicado como segredo empresarial. Reservados todos os direitos.
Confiado como secreto industrial. Nos reservamos todos los derechos.

The reproduction, transmission or use of this document or its is not permitted without expres written authority.
Offenders will be liable for damages. All rights, including rights created by patent grant or registration of a utility model or design, are reserved.

Documentation structur: Standard
Source file: KO050722.ODA

			Date	22.07.2005	VSZ KOSICE	SIEMENS AG ISA TOOLS	Substation control system 6MB Indication field
			Drawn	LANG			
			Appr.				
Remarks	Date	Name	Norm		Orig./Repl. 1/Repl. by		Table

T = /BS 73
+
-S116
Page 73

Proprietary data, company confidential. All rights reserved.
Confia a ltre da secret dentreprise. Tous droits r serv s.
Comunicado como segredo empresarial. Reservados todos os direitos.
Confiado como secreto industrial. Nos reservamos todos los derechos.

The reproduction, transmission or use of this document or its contents is not permitted without express written authority. Offenders will be liable for damages. All rights, including rights created by patent grant or registration of a utility model or design, are reserved.

Allocated diagram Übersichtsbild 220KV Kosice

Name	Position Column	Position Line	Updating on change	Sign reversal	Digits after decimal point	Overall points	Left-justified	Leading zeros	Sign chained	+- suppression	Display attribute group	Section	Bay	Logical device	Lower limit
110KV MW Feld 01 SYN Frequenz 1	67	6	Y	N	2	6	N	N	N	N	ABG 12 SY-Meßwert	R110	EA01/3	SYNCHROMESSWERTE	Frequenz 1
110KV MW Feld 01 SYN Frequenz 2	67	7	Y	N	2	6	N	N	N	N	ABG 12 SY-Meßwert	R110	EA01/3	SYNCHROMESSWERTE	Frequenz 2
110KV MW Feld 01 SYN PHASENDIFFERENZ	66	10	Y	N	1	6	N	N	N	N	ABG 12 SY-Meßwert	R110	EA01/3	SYNCHROMESSWERTE	WINKELDIFFERENZ
110KV MW Feld 01 SYN SPG 1	67	8	Y	N	1	6	N	N	N	N	ABG 12 SY-Meßwert	R110	EA01/3	SYNCHROMESSWERTE	SY-SPANNUNG 1
110KV MW Feld 01 SYN SPG 2	67	9	Y	N	1	6	N	N	N	N	ABG 12 SY-Meßwert	R110	EA01/3	SYNCHROMESSWERTE	SY-SPANNUNG 2
22kV E07 MTP L2	13	18	Y	N	1	7	N	N	Y	Y	ABG 08 Meßwert	R110	EA07	MESSWERTE STROM	PRUD L2
22kV E07 Spannung L1	14	17	Y	N	1	6	N	N	Y	Y	ABG 08 Meßwert	R110	EA07	MESSWERTE SPANNUNG	NAPATIE L1
22kV EA03 MTP L2	48	18	Y	N	0	5	N	N	Y	Y	ABG 08 Meßwert	R110	EA03	MESSWERTE STROM	PRUD L2
22kV EA03 Spannung L1	48	17	Y	N	1	5	N	N	Y	Y	ABG 08 Meßwert	R110	EA03	MESSWERTE SPANNUNG	NAPATIE L1
Blindleistung	38	20	Y	N	1	5	N	N	Y	Y	ABG 08 Meßwert	T201	TERC		VYKON JALOVY
Blindleistung	18	20	Y	N	1	5	N	N	Y	Y	ABG 08 Meßwert	T202	TERC		VYKON JALOVY
Blindleistung	14	11	Y	N	0	4	N	N	Y	Y	ABG 08 Meßwert	R220	T202		JALOVY VYKON
Blindleistung	49	11	Y	N	0	4	N	N	Y	Y	ABG 08 Meßwert	R220	T201		JALOVY VYKON
COS FI	70	25	Y	N	2	6	N	N	Y	Y	ABG 08 Meßwert	R220	T201		COS FI
COS FI	70	17	Y	N	2	6	N	N	Y	Y	ABG 08 Meßwert	R220	T202		COS FI
Frequenz DA01	49	6	Y	N	1	5	N	N	Y	Y	ABG 08 Meßwert	R220	T201		FREKVENCIA
Frequenz DA01	14	6	Y	N	1	5	N	N	Y	Y	ABG 08 Meßwert	R220	T202		FREKVENCIA
Spannung L1-L2	14	12	Y	N	0	4	N	N	Y	Y	ABG 08 Meßwert	R220	T202	MESSW. SPANNUNG	NAPATIE L1-L2
Spannung L1-L2	49	12	Y	N	0	4	N	N	Y	Y	ABG 08 Meßwert	R220	T201	MESSW. SPANNUNG	NAPATIE L1-L2
Spannung L1-L2	18	21	Y	N	1	5	N	N	Y	Y	ABG 08 Meßwert	T202	TERC	MESSWERTE SPANNUNG	NAPATIE L1-L2
Spannung L1-L2	38	21	Y	N	1	5	N	N	Y	Y	ABG 08 Meßwert	T201	TERC	MESSWERTE SPANNUNG	NAPATIE L1-L2
Spannung L1-L2 DA01	49	5	Y	N	0	4	N	N	Y	Y	ABG 08 Meßwert	R220	T201	MESSW. SPANNUNG DA01	NAPATIE L1-L2
Spannung L1-L2 DA01	14	5	Y	N	0	4	N	N	Y	Y	ABG 08 Meßwert	R220	T202	MESSW. SPANNUNG DA02	NAPATIE L1-L2
Strom L1	39	22	Y	N	0	4	N	N	Y	Y	ABG 08 Meßwert	T201	TERC	MESSWERTE STROM	PRUD L1
Strom L1	70	14	Y	N	0	4	N	N	Y	Y	ABG 08 Meßwert	R220	T202	MESSWERTE STROM	PRUD L1
Strom L1	70	22	Y	N	0	4	N	N	Y	Y	ABG 08 Meßwert	R220	T201	MESSWERTE STROM	PRUD L1
Strom L1	19	22	Y	N	0	4	N	N	Y	Y	ABG 08 Meßwert	T202	TERC	MESSWERTE STROM	PRUD L1
Strom L2	39	23	Y	N	0	4	N	N	Y	Y	ABG 08 Meßwert	T201	TERC	MESSWERTE STROM	PRUD L2
Strom L2	70	15	Y	N	0	4	N	N	Y	Y	ABG 08 Meßwert	R220	T202	MESSWERTE STROM	PRUD L2
Strom L2	19	23	Y	N	0	4	N	N	Y	Y	ABG 08 Meßwert	T202	TERC	MESSWERTE STROM	PRUD L2
Strom L2	70	23	Y	N	0	4	N	N	Y	Y	ABG 08 Meßwert	R220	T201	MESSWERTE STROM	PRUD L2
Strom L3	39	24	Y	N	0	4	N	N	Y	Y	ABG 08 Meßwert	T201	TERC	MESSWERTE STROM	PRUD L3

Documentation structur: Standard
Source file: KO050722.ODA

Rev.	Remarks	Date	Name	Norm
			Date	22.07.2005
			Drawn	LANG
			Appr.	

VSZ KOSICE

Orig./Repl. 1/Repl. by

SIEMENS AG
ISAOOLS

Substation control system 6MB
Analog value field

Table

T = /BS 74
+

-S116

Allocated diagram Übersichtsbild 220KV Kosice

Name	Position Column	Position Line	Updating on change	Sign reversal	Digits after decimal point	Overall points	Left-justified	Leading zeros	Sign chained	+- suppression	Display attribute group	Section	Bay	Logical device	Lower limit
Strom L3	70	24	Y	N	0	4	N	N	Y	Y	ABG 08 Meßwert	R220	T201	MESSWERTE STROM	PRUD L3
Strom L3	19	24	Y	N	0	4	N	N	Y	Y	ABG 08 Meßwert	T202	TERC	MESSWERTE STROM	PRUD L3
Strom L3	70	16	Y	N	0	4	N	N	Y	Y	ABG 08 Meßwert	R220	T202	MESSWERTE STROM	PRUD L3
WIRKLEISTUNG	14	10	Y	N	0	4	N	N	Y	Y	ABG 08 Meßwert	R220	T202		CINNY VYKON
WIRKLEISTUNG	18	19	Y	N	1	5	N	N	Y	Y	ABG 08 Meßwert	T202	TERC		VYKON CINNY
WIRKLEISTUNG	38	19	Y	N	1	5	N	N	Y	Y	ABG 08 Meßwert	T201	TERC		VYKON CINNY
WIRKLEISTUNG	49	10	Y	N	0	4	N	N	Y	Y	ABG 08 Meßwert	R220	T201		CINNY VYKON

Proprietary data, company confidential. All rights reserved.
Confiaa tfra ds secret dentreprise. Tous droits rservs.
Comunicado como segredo empresarial. Reservados todos os direitos.
Confiado como secreto industrial. Nos reservamos todos los derechos.
The reproduction, transmission or use of this document or its
is not permitted without express written authority.
Offenders will be liable for damages. All rights, including rights
created by patent grant or registration of a utility model or design, are reserved.

Documentation structur: Standard
Source file: KO050722.ODA

Date	22.07.2005	VSZ KOSICE	SIEMENS AG ISATOOLS	Substation control system 6MB
Drawn	LANG			Analog value field
Appr.				
Remarks	Date	Name Norm	Orig./Repl. 1/Repl. by	Table

T = /BS 75
+
-S116
Page 75

Übersichtsbild Kosice

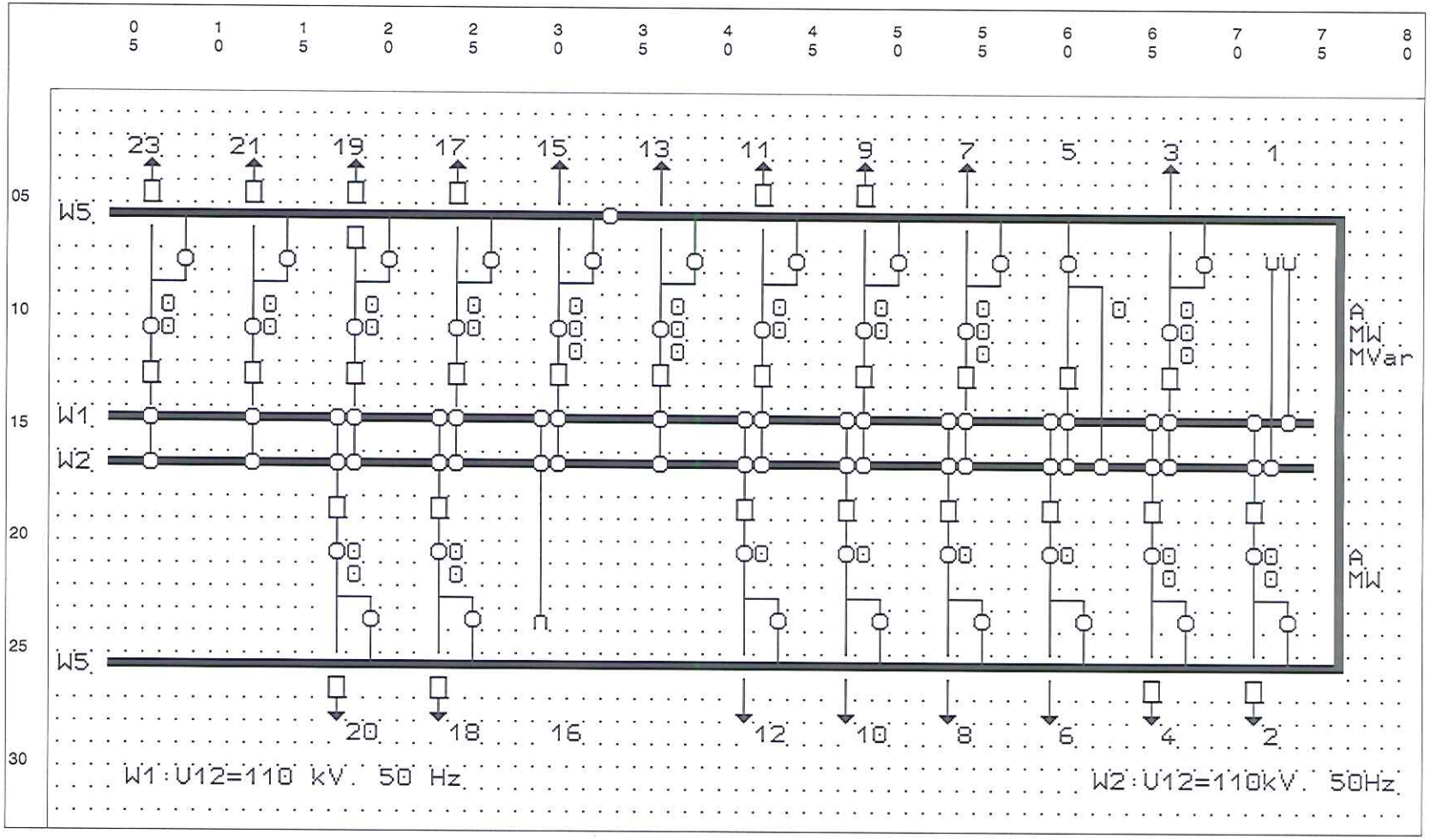

The reproduction, transmission or use of this document or its is not permitted without expres written authority. Offenders will be liable for damages. All rights, including rights created by patent grant or registration of a utility model or design, are reserved
Proprietary data, company confidential. All rights reserved. Confie a titre de secret d'entreprise. Tous droits reservs. Comunicado como segredo empresarial. Reservados todos os direitos. Confiado como secreto industrial. Nos reservamos todos los derechos.

Documentation structur: Standard
Source file: KO050722.ODA

Rev.	Remarks	Date	Name	Date	22.07.2005	VSZ KOSICE	SIEMENS AG ISA TOOLS	Substation control system 6MB Overview diagram	T = /BS 76
				Drawn	LANG				+
				Appr.					
				Norm		Orig./Repl. 1/Repl. by		Table	-S116 Page 76

Allocated diagram Übersichtsbild Kosice

Type: Indication field for symbol/figure

Name	Position Column	Position Line	Acknowledgeable	Display as	Display attribute group	Allocation of:	Section	Bay	Logical device	Lower limit
Leistungsschalter	42	13	N	SY	ABG 02 Ü-Bild Leistungsschalter 110kV	INF	R110	EA11	VYPINAC Q0	SCHALTZUSTAND
Leistungsschalter	54	13	N	SY	ABG 02 Ü-Bild Leistungsschalter 110kV	INF	R110	EA07	VYPINAC Q0	SCHALTZUSTAND
Leistungsschalter	12	13	N	SY	ABG 02 Ü-Bild Leistungsschalter 110kV	INF	R110	EA21	VYPINAC Q0	SCHALTZUSTAND
Leistungsschalter	53	19	N	SY	ABG 02 Ü-Bild Leistungsschalter 110kV	INF	R110	EA08	VYPINAC Q0	SCHALTZUSTAND
Leistungsschalter	59	19	N	SY	ABG 02 Ü-Bild Leistungsschalter 110kV	INF	R110	EA06	VYPINAC Q0	SCHALTZUSTAND
Leistungsschalter	48	13	N	SY	ABG 02 Ü-Bild Leistungsschalter 110kV	INF	R110	EA09	VYPINAC Q0	SCHALTZUSTAND
Leistungsschalter	60	13	N	SY	ABG 02 Ü-Bild Leistungsschalter 110kV	INF	R110	EA05	VYPINAC Q0	SCHALTZUSTAND
Leistungsschalter	47	19	N	SY	ABG 02 Ü-Bild Leistungsschalter 110kV	INF	R110	EA10	VYPINAC Q0	SCHALTZUSTAND
Leistungsschalter	23	19	N	SY	ABG 02 Ü-Bild Leistungsschalter 110kV	INF	R110	EA18	VYPINAC Q0	SCHALTZUSTAND
Leistungsschalter	30	13	N	SY	ABG 02 Ü-Bild Leistungsschalter 110kV	INF	R110	EA15	VYPINAC Q0	SCHALTZUSTAND
Leistungsschalter	41	19	N	SY	ABG 02 Ü-Bild Leistungsschalter 110kV	INF	R110	EA12	VYPINAC Q0	SCHALTZUSTAND
Leistungsschalter	36	13	N	SY	ABG 02 Ü-Bild Leistungsschalter 110kV	INF	R110	EA13	VYPINAC Q0	SCHALTZUSTAND
Leistungsschalter	71	19	N	SY	ABG 02 Ü-Bild Leistungsschalter 110kV	INF	R110	EA02	VYPINAC Q0	SCHALTZUSTAND
Leistungsschalter	6	13	N	SY	ABG 02 Ü-Bild Leistungsschalter 110kV	INF	R110	EA23	VYPINAC Q0	SCHALTZUSTAND
Leistungsschalter	65	19	N	SY	ABG 02 Ü-Bild Leistungsschalter 110kV	INF	R110	EA04	VYPINAC Q0	SCHALTZUSTAND
Leistungsschalter	66	13	N	SY	ABG 02 Ü-Bild Leistungsschalter 110kV	INF	R110	EA03	VYPINAC Q0	SCHALTZUSTAND
Leistungsschalter	24	13	N	SY	ABG 02 Ü-Bild Leistungsschalter 110kV	INF	R110	EA17	VYPINAC Q0	SCHALTZUSTAND
Leistungsschalter	17	19	N	SY	ABG 02 Ü-Bild Leistungsschalter 110kV	INF	R110	EA20	VYPINAC Q0	SCHALTZUSTAND
Leistungsschalter Gegenseite Feld 09	48	5	N	SY	ABG 02 Ü-Bild Leistungsschalter 110kV	INF	T02-9	POLE09	PROTILAHLY VYPINAC	SCHALTZUSTAND
Leistungsschalter Gegenseite Feld 11	42	5	N	SY	ABG 02 Ü-Bild Leistungsschalter 110kV	INF	T05-13	POLE11	PROTILAHLY VYPINAC	SCHALTZUSTAND
Leistungsschalter Gegenseite Feld 17	24	5	N	SY	ABG 02 Ü-Bild Leistungsschalter 110kV	INF	T40-10	POLE17	PROTILAHLY VYPINAC	SCHALTZUSTAND
Leistungsschalter Gegenseite Feld 18	23	27	N	SY	ABG 02 Ü-Bild Leistungsschalter 110kV	INF	T02-3	POLE18	PROTILAHLY VYPINAC	SCHALTZUSTAND
Leistungsschalter Gegenseite Feld 19	18	5	N	SY	ABG 02 Ü-Bild Leistungsschalter 110kV	INF	T02-16	POLE19	PROTILAHLY VYPINAC	SCHALTZUSTAND
Leistungsschalter Gegenseite Feld 2	71	27	N	SY	ABG 02 Ü-Bild Leistungsschalter 110kV	INF	T10/20-1	POLE02	PROTILAHLY VYPINAC	SCHALTZUSTAND
Leistungsschalter Gegenseite Feld 20	17	27	N	SY	ABG 02 Ü-Bild Leistungsschalter 110kV	INF	T05-11	POLE20	PROTILAHLY VYPINAC	SCHALTZUSTAND
Leistungsschalter Gegenseite Feld 21	12	5	N	SY	ABG 02 Ü-Bild Leistungsschalter 110kV	INF	T??-??	POLE21	PROTILAHLY VYPINAC	SCHALTZUSTAND
Leistungsschalter Gegenseite Feld 23	6	5	N	SY	ABG 02 Ü-Bild Leistungsschalter 110kV	INF	T50-27	POLE23	PROTILAHLY VYPINAC	SCHALTZUSTAND
Leistungsschalter Gegenseite Feld 4	65	27	N	SY	ABG 02 Ü-Bild Leistungsschalter 110kV	INF	T30-6	POLE04	PROTILAHLY VYPINAC	SCHALTZUSTAND
Leistungsschalter Q0	18	13	N	SY	ABG 02 Ü-Bild Leistungsschalter 110kV	INF	R110	EA19	VYPINAC Q0	SCHALTZUSTAND
Leistungsschalter Q01	18	7	N	SY	ABG 02 Ü-Bild Leistungsschalter 110kV	INF	R110	EA19	VYPINAC Q01	SCHALTZUSTAND
Trenner Q1	12	15	N	SY	ABG 02 Ü-Bild Trenner 110kV Kringel un.	INF	R110	EA21	ODPOJOVAC Q1	SCHALTZUSTAND
Trenner Q1	18	15	N	SY	ABG 02 Ü-Bild Trenner 110kV Kringel un.	INF	R110	EA19	ODPOJOVAC Q1	SCHALTZUSTAND

Proprietary data, company confidential. All rights reserved.
Confia a être de secret d'entreprise. Tous droits réservés.
Comunicado como segredo empresarial. Reservados todos os direitos.
Confiado como secreto industrial. Nos reservamos todos los derechos.
The reproduction, transmission or use of this document or its contents is not permitted without expres written authority. Offenders will be liable for damages. All rights, including rights created by patent grant or registration of a utility model or design, are reserved.

Documentation structure: Standard
Source file: KO050722.ODA

Date	22.07.2005	VSZ KOSICE	SIEMENS AG ISATOOLS
Drawn	LANG		
Appr.			
Remarks	Date	Name	Norm
			Orig./Repl. 1/Repl. by

Substation control system 6MB
Indication field
Table

T = /BS 77
+
-S116
Page 77

Allocated diagram: Übersichtsbild Kosice

Type: Indication field for symbol/figure

Name	Position Column	Position Line	Acknowledgeable	Display as	Display attribute group	Allocation of:	Section	Bay	Logical device	Lower limit
Trenner Q1	66	15	N	SY	ABG 02 Ü-Bild Trenner 110kV Kringel un.	INF	R110	EA03	ODPOJOVAC Q1	SCHALTZUSTAND
Trenner Q1	48	15	N	SY	ABG 02 Ü-Bild Trenner 110kV Kringel o/u	INF	R110	EA09	ODPOJOVAC Q1	SCHALTZUSTAND
Trenner Q1	6	15	N	SY	ABG 02 Ü-Bild Trenner 110kV Kringel un.	INF	R110	EA23	ODPOJOVAC Q1	SCHALTZUSTAND
Trenner Q1	47	15	N	SY	ABG 02 Ü-Bild Trenner 110kV Kringel un.	INF	R110	EA10	ODPOJOVAC Q1	SCHALTZUSTAND
Trenner Q1	23	15	N	SY	ABG 02 Ü-Bild Trenner 110kV Kringel un.	INF	R110	EA18	ODPOJOVAC Q1	SCHALTZUSTAND
Trenner Q1	30	15	N	SY	ABG 02 Ü-Bild Trenner 110kV Kringel o/u	INF	R110	EA15	ODPOJOVAC Q1	SCHALTZUSTAND
Trenner Q1	65	15	N	SY	ABG 02 Ü-Bild Trenner 110kV Kringel un.	INF	R110	EA04	ODPOJOVAC Q1	SCHALTZUSTAND
Trenner Q1	24	15	N	SY	ABG 02 Ü-Bild Trenner 110kV Kringel un.	INF	R110	EA17	ODPOJOVAC Q1	SCHALTZUSTAND
Trenner Q1	42	15	N	SY	ABG 02 Ü-Bild Trenner 110kV Kringel o/u	INF	R110	EA11	ODPOJOVAC Q1	SCHALTZUSTAND
Trenner Q1	60	15	N	SY	ABG 02 Ü-Bild Trenner 110kV Kringel o/u	INF	R110	EA05	ODPOJOVAC Q1	SCHALTZUSTAND
Trenner Q1	73	15	N	SY	ABG 02 Ü-Bild Trenner 110kV Kringel ob.	INF	R110	EA01	ODPOJOVAC Q1	SCHALTZUSTAND
Trenner Q1	41	15	N	SY	ABG 02 Ü-Bild Trenner 110kV Kringel un.	INF	R110	EA12	ODPOJOVAC Q1	SCHALTZUSTAND
Trenner Q1	59	15	N	SY	ABG 02 Ü-Bild Trenner 110kV Kringel un.	INF	R110	EA06	ODPOJOVAC Q1	SCHALTZUSTAND
Trenner Q1	36	15	N	SY	ABG 02 Ü-Bild Trenner 110kV Kringel o/u	INF	R110	EA13	ODPOJOVAC Q1	SCHALTZUSTAND
Trenner Q1	54	15	N	SY	ABG 02 Ü-Bild Trenner 110kV Kringel un.	INF	R110	EA07	ODPOJOVAC Q1	SCHALTZUSTAND
Trenner Q1	29	15	N	SY	ABG 02 Ü-Bild Trenner 110kV Kringel un.	INF	R110	EA16	ODPOJOVAC Q1	SCHALTZUSTAND
Trenner Q1	17	15	N	SY	ABG 02 Ü-Bild Trenner 110kV Kringel un.	INF	R110	EA20	ODPOJOVAC Q1	SCHALTZUSTAND
Trenner Q1	71	15	N	SY	ABG 02 Ü-Bild Trenner 110kV Kringel un.	INF	R110	EA02	ODPOJOVAC Q1	SCHALTZUSTAND
Trenner Q1	53	15	N	SY	ABG 02 Ü-Bild Trenner 110kV Kringel un.	INF	R110	EA08	ODPOJOVAC Q1	SCHALTZUSTAND
Trenner Q2	65	17	N	SY	ABG 02 Ü-Bild Trenner 110kV Kringel o/u	INF	R110	EA04	ODPOJOVAC Q2	SCHALTZUSTAND
Trenner Q2	54	17	N	SY	ABG 02 Ü-Bild Trenner 110kV Kringel ob.	INF	R110	EA07	ODPOJOVAC Q2	SCHALTZUSTAND
Trenner Q2	71	17	N	SY	ABG 02 Ü-Bild Trenner 110kV Kringel o/u	INF	R110	EA02	ODPOJOVAC Q2	SCHALTZUSTAND
Trenner Q2	6	17	N	SY	ABG 02 Ü-Bild Trenner 110kV Kringel ob.	INF	R110	EA23	ODPOJOVAC Q2	SCHALTZUSTAND
Trenner Q2	30	17	N	SY	ABG 02 Ü-Bild Trenner 110kV Kringel ob.	INF	R110	EA15	ODPOJOVAC Q2	SCHALTZUSTAND
Trenner Q2	59	17	N	SY	ABG 02 Ü-Bild Trenner 110kV Kringel o/u	INF	R110	EA06	ODPOJOVAC Q2	SCHALTZUSTAND
Trenner Q2	17	17	N	SY	ABG 02 Ü-Bild Trenner 110kV Kringel o/u	INF	R110	EA20	ODPOJOVAC Q2	SCHALTZUSTAND
Trenner Q2	29	17	N	SY	ABG 02 Ü-Bild Trenner 110kV Kringel o/u	INF	R110	EA16	ODPOJOVAC Q2	SCHALTZUSTAND
Trenner Q2	72	17	N	SY	ABG 02 Ü-Bild Trenner 110kV Kringel ob.	INF	R110	EA01	ODPOJOVAC Q2	SCHALTZUSTAND
Trenner Q2	53	17	N	SY	ABG 02 Ü-Bild Trenner 110kV Kringel o/u	INF	R110	EA08	ODPOJOVAC Q2	SCHALTZUSTAND
Trenner Q2	18	17	N	SY	ABG 02 Ü-Bild Trenner 110kV Kringel ob.	INF	R110	EA19	ODPOJOVAC Q2	SCHALTZUSTAND
Trenner Q2	42	17	N	SY	ABG 02 Ü-Bild Trenner 110kV Kringel ob.	INF	R110	EA11	ODPOJOVAC Q2	SCHALTZUSTAND
Trenner Q2	12	17	N	SY	ABG 02 Ü-Bild Trenner 110kV Kringel ob.	INF	R110	EA21	ODPOJOVAC Q2	SCHALTZUSTAND

Proprietary data, company confidential. All rights reserved
Confie a titre de secret d'entreprise. Tous droits réservés.
Comunicado como segredo empresarial. Reservados todos os direitos.
Confiado como secreto industrial. Nos reservamos todos los derechos.

The reproduction, transmission or use of this document or its contents is not permitted without express written authority. Offenders will be liable for damages. All rights, including rights created by patent grant or registration of a utility model or design, are reserved.

Documentation structur: Standard
Source file: KO0507/22.ODA

Rev.	Remarks	Date	Name	Norm
			Date	22.07.2005
			Drawn	LANG
			Appr.	

VSZ KOSICE

Orig./Repl. 1/Repl. by

SIEMENS AG
ISAOOLS

Substation control system 6MB
Indication field

Table

T = /BS 78
+

-S116

Allocated diagram Übersichtsbild Kosice

Type: Indication field for symbol/figure

Proprietary data, company confidential. All rights reserved.
Confié a titre de secret dentreprise. Tous droits r,serv,s.
Comunicado como segredo empresarial. Reservados todos os direitos.
Confiado como secreto industrial. Nos reservamos todos los derechos.

The reproduction, transmission or use of the's document or its contents is not permitted without expres written authority. Offenders will be liable for damages. All rights, including rights created by patent grant or registration of a utility model or design, are reserved.

Name	Position: Column	Position: Line	Acknowledgeable	Display as	Display attribute group	Allocation of:	Section	Bay	Logical device	Lower limit
Trenner Q2	60	17	N	SY	ABG 02 Ü-Bild Trenner 110kV Kringel ob.	INF	R110	EA05	ODPOJOVAC Q2	SCHALTZUSTAND
Trenner Q2	24	17	N	SY	ABG 02 Ü-Bild Trenner 110kV Kringel ob.	INF	R110	EA17	ODPOJOVAC Q2	SCHALTZUSTAND
Trenner Q2	48	17	N	SY	ABG 02 Ü-Bild Trenner 110kV Kringel ob.	INF	R110	EA09	ODPOJOVAC Q2	SCHALTZUSTAND
Trenner Q2	36	17	N	SY	ABG 02 Ü-Bild Trenner 110kV Kringel ob.	INF	R110	EA13	ODPOJOVAC Q2	SCHALTZUSTAND
Trenner Q2	47	17	N	SY	ABG 02 Ü-Bild Trenner 110kV Kringel o/u	INF	R110	EA10	ODPOJOVAC Q2	SCHALTZUSTAND
Trenner Q2	66	17	N	SY	ABG 02 Ü-Bild Trenner 110kV Kringel ob.	INF	R110	EA03	ODPOJOVAC Q2	SCHALTZUSTAND
Trenner Q2	41	17	N	SY	ABG 02 Ü-Bild Trenner 110kV Kringel o/u	INF	R110	EA12	ODPOJOVAC Q2	SCHALTZUSTAND
Trenner Q2	23	17	N	SY	ABG 02 Ü-Bild Trenner 110kV Kringel o/u	INF	R110	EA18	ODPOJOVAC Q2	SCHALTZUSTAND
Trenner Q20	62	17	N	SY	ABG 02 Ü-Bild Trenner 110kV Kringel ob.	INF	R110	EA05	ODPOJOVAC Q20	SCHALTZUSTAND
Trenner Q7	67	24	N	SY	ABG 02 Ü-Bild Trenner 110kV Kringel o/u	INF	R110	EA04	ODPOJOVAC Q7	SCHALTZUSTAND
Trenner Q7	43	24	N	SY	ABG 02 Ü-Bild Trenner 110kV Kringel o/u	INF	R110	EA12	ODPOJOVAC Q7	SCHALTZUSTAND
Trenner Q7	14	8	N	SY	ABG 02 Ü-Bild Trenner 110kV Kringel o/u	INF	R110	EA21	ODPOJOVAC Q7	SCHALTZUSTAND
Trenner Q7	68	8	N	SY	ABG 02 Ü-Bild Trenner 110kV Kringel o/u	INF	R110	EA03	ODPOJOVAC Q7	SCHALTZUSTAND
Trenner Q7	49	24	N	SY	ABG 02 Ü-Bild Trenner 110kV Kringel o/u	INF	R110	EA10	ODPOJOVAC Q7	SCHALTZUSTAND
Trenner Q7	20	8	N	SY	ABG 02 Ü-Bild Trenner 110kV Kringel o/u	INF	R110	EA19	ODPOJOVAC Q7	SCHALTZUSTAND
Trenner Q7	32	8	N	SY	ABG 02 Ü-Bild Trenner 110kV Kringel o/u	INF	R110	EA15	ODPOJOVAC Q7	SCHALTZUSTAND
Trenner Q7	56	8	N	SY	ABG 02 Ü-Bild Trenner 110kV Kringel o/u	INF	R110	EA07	ODPOJOVAC Q7	SCHALTZUSTAND
Trenner Q7	44	8	N	SY	ABG 02 Ü-Bild Trenner 110kV Kringel o/u	INF	R110	EA11	ODPOJOVAC Q7	SCHALTZUSTAND
Trenner Q7	8	8	N	SY	ABG 02 Ü-Bild Trenner 110kV Kringel o/u	INF	R110	EA23	ODPOJOVAC Q7	SCHALTZUSTAND
Trenner Q7	19	24	N	SY	ABG 02 Ü-Bild Trenner 110kV Kringel o/u	INF	R110	EA20	ODPOJOVAC Q7	SCHALTZUSTAND
Trenner Q7	38	8	N	SY	ABG 02 Ü-Bild Trenner 110kV Kringel o/u	INF	R110	EA13	ODPOJOVAC Q7	SCHALTZUSTAND
Trenner Q7	25	24	N	SY	ABG 02 Ü-Bild Trenner 110kV Kringel o/u	INF	R110	EA18	ODPOJOVAC Q7	SCHALTZUSTAND
Trenner Q7	73	24	N	SY	ABG 02 Ü-Bild Trenner 110kV Kringel o/u	INF	R110	EA02	ODPOJOVAC Q7	SCHALTZUSTAND
Trenner Q7	26	8	N	SY	ABG 02 Ü-Bild Trenner 110kV Kringel o/u	INF	R110	EA17	ODPOJOVAC Q7	SCHALTZUSTAND
Trenner Q7	55	24	N	SY	ABG 02 Ü-Bild Trenner 110kV Kringel o/u	INF	R110	EA08	ODPOJOVAC Q7	SCHALTZUSTAND
Trenner Q7	61	24	N	SY	ABG 02 Ü-Bild Trenner 110kV Kringel o/u	INF	R110	EA06	ODPOJOVAC Q7	SCHALTZUSTAND
Trenner Q7	50	8	N	SY	ABG 02 Ü-Bild Trenner 110kV Kringel o/u	INF	R110	EA09	ODPOJOVAC Q7	SCHALTZUSTAND
Trenner Q7	60	8	N	SY	ABG 02 Ü-Bild Trenner 110kV Kringel o/u	INF	R110	EA05	ODPOJOVAC Q7	SCHALTZUSTAND
Trenner Q71	33	6	N	SY	ABG 02 Ü-Bild Trenner 110kV ohne Kringel	INF	R110	EA15	ODPOJOVAC POM.PRIP.Q71	SCHALTZUSTAND
Trenner Q9	18	11	N	SY	ABG 02 Ü-Bild Trenner 110kV Kringel o/u	INF	R110	EA19	ODPOJOVAC Q9	SCHALTZUSTAND
Trenner Q9	23	21	N	SY	ABG 02 Ü-Bild Trenner 110kV Kringel o/u	INF	R110	EA18	ODPOJOVAC Q9	SCHALTZUSTAND
Trenner Q9	54	11	N	SY	ABG 02 Ü-Bild Trenner 110kV Kringel o/u	INF	R110	EA07	ODPOJOVAC Q9	SCHALTZUSTAND

Documentation structur: Standard
Source file: KO050722.ODA

Date 22.07.2005
Drawn LANG
Appr.
Norm
Remarks | Date | Name

VSZ KOSICE
Orig./Repl. 1/Repl. by

SIEMENS AG
ISATOOLS

Substation control system 6MB
Indication field
Table

T = /BS 79
+
-S116

Allocated diagram Übersichtsbild Kosice

Type: Indication field for symbol/figure

Name	Position Column	Position Line	Acknowledgeable	Display as	Display attribute group	Allocation of:	Section	Bay	Logical device	Lower limit
Trenner Q9	47	21	N	SY	ABG 02 Ü-Bild Trenner 110kV Kringel o/u	INF	R110	EA10	ODPOJOVAC Q9	SCHALTZUSTAND
Trenner Q9	36	11	N	SY	ABG 02 Ü-Bild Trenner 110kV Kringel o/u	INF	R110	EA13	ODPOJOVAC Q9	SCHALTZUSTAND
Trenner Q9	71	21	N	SY	ABG 02 Ü-Bild Trenner 110kV Kringel o/u	INF	R110	EA02	ODPOJOVAC Q9	SCHALTZUSTAND
Trenner Q9	24	11	N	SY	ABG 02 Ü-Bild Trenner 110kV Kringel o/u	INF	R110	EA17	ODPOJOVAC Q9	SCHALTZUSTAND
Trenner Q9	59	21	N	SY	ABG 02 Ü-Bild Trenner 110kV Kringel o/u	INF	R110	EA06	ODPOJOVAC Q9	SCHALTZUSTAND
Trenner Q9	17	21	N	SY	ABG 02 Ü-Bild Trenner 110kV Kringel o/u	INF	R110	EA20	ODPOJOVAC Q9	SCHALTZUSTAND
Trenner Q9	48	11	N	SY	ABG 02 Ü-Bild Trenner 110kV Kringel o/u	INF	R110	EA09	ODPOJOVAC Q9	SCHALTZUSTAND
Trenner Q9	41	21	N	SY	ABG 02 Ü-Bild Trenner 110kV Kringel o/u	INF	R110	EA12	ODPOJOVAC Q9	SCHALTZUSTAND
Trenner Q9	42	11	N	SY	ABG 02 Ü-Bild Trenner 110kV Kringel o/u	INF	R110	EA11	ODPOJOVAC Q9	SCHALTZUSTAND
Trenner Q9	30	11	N	SY	ABG 02 Ü-Bild Trenner 110kV Kringel o/u	INF	R110	EA15	ODPOJOVAC Q9	SCHALTZUSTAND
Trenner Q9	66	11	N	SY	ABG 02 Ü-Bild Trenner 110kV Kringel o/u	INF	R110	EA03	ODPOJOVAC Q9	SCHALTZUSTAND
Trenner Q9	6	11	N	SY	ABG 02 Ü-Bild Trenner 110kV Kringel o/u	INF	R110	EA23	ODPOJOVAC Q9	SCHALTZUSTAND
Trenner Q9	12	11	N	SY	ABG 02 Ü-Bild Trenner 110kV Kringel o/u	INF	R110	EA21	ODPOJOVAC Q9	SCHALTZUSTAND
Trenner Q9	53	21	N	SY	ABG 02 Ü-Bild Trenner 110kV Kringel o/u	INF	R110	EA08	ODPOJOVAC Q9	SCHALTZUSTAND
Trenner Q9	65	21	N	SY	ABG 02 Ü-Bild Trenner 110kV Kringel o/u	INF	R110	EA04	ODPOJOVAC Q9	SCHALTZUSTAND

Proprietary data, company confidential. All rights reserved
Confiaatire da secret dentreprise. Tous droits r.serv.s.
Comunicado como segredo empresarial. Reservados todos os direitos.
Confiado como secreto industrial. Nos reservamos todos los derechos.

The reproduction, transmission or use of this document or its
is not permitted without express written authority.
Offenders will be liable for damages. All rights, including rights
created by patent grant or registration of a utility model or design, are reserved

Documentation structur: Standard
Source file: KO050722.ODA

Rev.	Remarks	Date	Name	Norm
			Date	22.07.2005
			Drawn	LANG
			Appr.	

VSZ KOSICE

Orig./Repl. 1/Repl. by

SIEMENS AG
ISATOOLS

Substation control system 6MB
Indication field

Table

T = /BS 80
+
-S116
Page 80

Proprietary data, company confidential. All rights reserved.
Confia a tire de secret dentreprise. Tous droits reservs.
Comunicado como segredo empresarial. Reservados todos os direitos.
Confiado como secreto industrial. Nos reservamos todos los derechos.
The reproduction, transmission or use of this document or its
is not permitted without expres written authority.
Offenders will be liable for damages. All rights, including rights
created by patent grant or registration of a utility model or design, are reserved

Documentation structur: Standard
Source file: KO050722.ODA

Allocated diagram Übersichtsbild Kosice

Name	Position Column	Position Line	Updating on change	Sign reversal	Digits after decimal point	Overall points	Left-justified	Leading zeros	Sign chained	+- suppression	Display attribute group	Section	Bay	Logical device	Lower limit
Blindleistung	67	12	Y	N	0	5	N	N	Y	Y	ABG 08 Meßwert	R110	EA03		VYKON JALOVY
Blindleistung	37	12	Y	N	0	4	N	N	Y	Y	ABG 08 Meßwert	R110	EA13		VYKON JALOVY
Blindleistung	31	12	Y	N	0	4	N	N	Y	Y	ABG 08 Meßwert	R110	EA15		VYKON JALOVY
Blindleistung	55	12	Y	N	0	4	N	N	Y	Y	ABG 08 Meßwert	R110	EA07		VYKON JALOVY
Strom L2	66	21	Y	N	0	4	N	N	Y	Y	ABG 08 Meßwert	R110	EA04	MESSWERTE STROM	PRUD L2
Strom L2	72	21	Y	N	0	4	N	N	Y	Y	ABG 08 Meßwert	R110	EA02	MESSWERTE STROM	PRUD L2
Strom L2	42	21	Y	N	0	4	N	N	Y	Y	ABG 08 Meßwert	R110	EA12	MESSWERTE STROM	PRUD L2
Strom L2	43	10	Y	N	0	4	N	N	Y	Y	ABG 08 Meßwert	R110	EA11	MESSWERTE STROM	PRUD L2
Strom L2	37	10	Y	N	0	4	N	N	Y	Y	ABG 08 Meßwert	R110	EA13	MESSWERTE STROM	PRUD L2
Strom L2	7	10	Y	N	0	4	N	N	Y	Y	ABG 08 Meßwert	R110	EA23	MESSWERTE STROM	PRUD L2
Strom L2	60	21	Y	N	0	4	N	N	Y	Y	ABG 08 Meßwert	R110	EA06	MESSWERTE STROM	PRUD L2
Strom L2	18	21	Y	N	0	4	N	N	Y	Y	ABG 08 Meßwert	R110	EA20	MESSWERTE STROM	PRUD L2
Strom L2	54	21	Y	N	0	4	N	N	Y	Y	ABG 08 Meßwert	R110	EA08	MESSWERTE STROM	PRUD L2
Strom L2	13	10	Y	N	0	4	N	N	Y	Y	ABG 08 Meßwert	R110	EA21	MESSWERTE STROM	PRUD L2
Strom L2	49	10	Y	N	0	4	N	N	Y	Y	ABG 08 Meßwert	R110	EA09	MESSWERTE STROM	PRUD L2
Strom L2	55	10	Y	N	0	4	N	N	Y	Y	ABG 08 Meßwert	R110	EA07	MESSWERTE STROM	PRUD L2
Strom L2	48	21	Y	N	0	4	N	N	Y	Y	ABG 08 Meßwert	R110	EA10	MESSWERTE STROM	PRUD L2
Strom L2	67	10	Y	N	0	5	N	N	Y	Y	ABG 08 Meßwert	R110	EA03	MESSWERTE STROM	PRUD L2
Strom L2	31	10	Y	N	0	4	N	N	Y	Y	ABG 08 Meßwert	R110	EA15	MESSWERTE STROM	PRUD L2
Strom L2	24	21	Y	N	0	4	N	N	Y	Y	ABG 08 Meßwert	R110	EA18	MESSWERTE STROM	PRUD L2
Strom L2	25	10	Y	N	0	4	N	N	Y	Y	ABG 08 Meßwert	R110	EA17	MESSWERTE STROM	PRUD L2
Strom L2	63	10	Y	N	0	3	N	N	Y	Y	ABG 08 Meßwert	R110	EA05	MESSWERTE STROM	PRUD L2
Strom L2	19	10	Y	N	0	4	N	N	Y	Y	ABG 08 Meßwert	R110	EA19	MESSWERTE STROM	PRUD L2
Wirkleistung	37	11	Y	N	0	4	N	N	Y	Y	ABG 08 Meßwert	R110	EA13		VYKON CINNY
Wirkleistung	49	11	Y	N	0	4	N	N	Y	Y	ABG 08 Meßwert	R110	EA09		VYKON CINNY
Wirkleistung	24	22	Y	N	0	4	N	N	Y	Y	ABG 08 Meßwert	R110	EA18		VYKON CINNY
Wirkleistung	43	11	Y	N	0	4	N	N	Y	Y	ABG 08 Meßwert	R110	EA11		VYKON CINNY
Wirkleistung	19	11	Y	N	0	4	N	N	Y	Y	ABG 08 Meßwert	R110	EA19		VYKON CINNY
Wirkleistung	31	11	Y	N	0	4	N	N	Y	Y	ABG 08 Meßwert	R110	EA15		VYKON CINNY
Wirkleistung	18	22	Y	N	0	4	N	N	Y	Y	ABG 08 Meßwert	R110	EA20		VYKON CINNY
WIRKLEISTUNG	55	11	Y	N	0	4	N	N	Y	Y	ABG 08 Meßwert	R110	EA07		VYKON CINNY
WIRKLEISTUNG	72	22	Y	N	0	4	N	N	Y	Y	ABG 08 Meßwert	R110	EA02		VYKON CINNY

Date	22.07.2005	VSZ KOSICE	SIEMENS AG ISAOOLS
Drawn	LANG		
Appr.			
Norm		Orig./Repl. 1/Repl. by	

Substation control system 6MB
Analog value field
Table

T = /BS 81
+
-S116
Page 81

Allocated diagram Übersichtsbild Kosice

Name	Position Column	Position Line	Updating on change	Sign reversal	Digits after decimal point	Overall points	Left-justified	Leading zeros	Sign chained	+- suppression	Display attribute group	Section	Bay	Logical device	Lower limit
WIRKLEISTUNG	66	22	Y	N	0	4	N	N	Y	Y	ABG 08 Meßwert	R110	EA04		VYKON CINNY
WIRKLEISTUNG	7	11	Y	N	0	4	N	N	Y	Y	ABG 08 Meßwert	R110	EA23		VYKON CINNY
WIRKLEISTUNG	25	11	Y	N	0	4	N	N	Y	Y	ABG 08 Meßwert	R110	EA17		VYKON CINNY
WIRKLEISTUNG	67	11	Y	N	0	5	N	N	Y	Y	ABG 08 Meßwert	R110	EA03		VYKON CINNY
WIRKLEISTUNG	13	11	Y	N	0	4	N	N	Y	Y	ABG 08 Meßwert	R110	EA21		VYKON CINNY

Proprietary data, company confidential. All rights reserved.
Confie a titre de secret d'entreprise. Tous droits r,serv,s.
Comunicado como segredo empresarial. Reservados todos os direitos.
Confiado como secreto industrial. Nos reservamos todos los derechos.

The reproduction, transmission or use of this document or its is not permitted without express written authority.
Offenders will be liable for damages. All rights, including rights created by patent grant or registration of a utility model or design, are reserved.

Documentation structur: Standard
Source file: KO050722.ODA

Rev.	Remarks	Date	Name	Date	22.07.2005
				Drawn	LANG
				Appr.	
				Norm	

VSZ
KOSICE

Orig./Repl. 1/Repl. by

SIEMENS AG
ISA TOOLS

Substation control system 6MB
Analog value field

Table

T = /BS 82
+

-S116

Page 82

Device LZG

FP/LPII			
SCC1.1		FW 1)	IEC 870-5-101
SCC1.2	MUX 1	FK01	
	MUX 2	FK02	
	MUX 3	FK03	
	MUX 4	FK04	
	MUX 5	FK05	
	MUX 6	FK06	
	MUX 7	FK07	
	MUX 8	FK08	
		FV	
SCC2.1		FW 1)	
SCC2.2		FW 1)	
SCC2.3		FW 1)	

1) FW = interface for telecontrol and peripheral connection

SC1			
SCC1.1	MUX 1	FK01	
	MUX 2	FK02	
	MUX 3	FK03	
	MUX 4	FK04	
		FV	
SCC1.2	MUX 1	FK05	
	MUX 2	FK06	
	MUX 3	FK07	
	MUX 4	FK08	
		FV	
SCC1.3	MUX 1	FK09	
	MUX 2	FK10	
	MUX 3	FK11	
	MUX 4	FK12	
		FV	
SCC2.1	MUX 1	FK13	
	MUX 2	FK14	
	MUX 3	FK15	
	MUX 4	FK16	
		FV	
SCC2.2	MUX 1	FK17	
	MUX 2	FK18	
	MUX 3	FK19	
	MUX 4	FK20	
		FV	
SCC2.3	MUX 1	FK21	
	MUX 2	FK22	
	MUX 3	FK23	
	MUX 4	FK24	
		FV	
SCC3.1	MUX 1	FK25	
	MUX 2	FK26	
	MUX 3	FK27	
	MUX 4	FK28	
		FV	
SCC3.2	MUX 1	FK29	
	MUX 2	FK30	
	MUX 3	FK31	
	MUX 4	FK32	
		FV	

SC2			
SCC1.1	MUX 1	FK33	
	MUX 2	FK34	
	MUX 3	FK35	
	MUX 4	FK36	
		FV	
SCC1.2	MUX 1	FK37	
	MUX 2	FK38	
	MUX 3	FK39	
	MUX 4	FK40	
		FV	
SCC1.3	MUX 1	FK41	
	MUX 2	FK42	
	MUX 3	FK43	
	MUX 4	FK44	
		FV	
SCC2.1	MUX 1	FK45	
	MUX 2	FK46	
	MUX 3	FK47	
	MUX 4	FK48	
		FV	
SCC2.2	MUX 1	FK49	
	MUX 2	FK50	
	MUX 3	FK51	
	MUX 4	FK52	
		FV	
SCC2.3	MUX 1	FK53	
	MUX 2	FK54	
	MUX 3	FK55	
	MUX 4	FK56	
		FV	
SCC3.1	MUX 1	FK57	
	MUX 2	FK58	
	MUX 3	FK59	
	MUX 4	FK60	
		FV	
SCC3.2	MUX 1	FK61	
	MUX 2	FK62	
	MUX 3	FK63	
	MUX 4	FK64	
		FV	

Proprietary data, company confidential. All rights reserved.
Confie a titre de secret d'entreprise. Tous droits r,serv,s.
Comunicado como segredo empresarial. Reservados todos os direitos.
Confiado como secreto industrial. Nos reservamos todos los derechos.

The reproduction, transmission or use of this document or its is not permitted without expres written authority.
Offenders will be liable for damages. All rights, including rights created by patent grant or registration of a utility model or design, are reserved

Documentation structur: Standard
Source file: KO050722.ODA

			Date	22.07.2005	VSZ KOSICE	SIEMENS AG ISAOOLS	Substation control system 6MB Interface assignment FP / SC1 / SC2
			Drawn	LANG			
			Appr.				
marks	Date	Name	Norm		Orig./Repl. 1/Repl. by		Table

T = /BU 1
+
-S118
Page 1